www.comoso.com

HYDAC INTERNATIONAL

Electronics

Transmitters, Switches, Diagnostics

About HYDAC

HYDAC stands for worldwide presence and accessibility to the customer. HYDAC has over 1000 distributors worldwide and more than 50 wholly owned branches. HYDAC has been active in the field of pressure monitoring for more than 45 years and has become one of the leaders in innovative pressure monitoring in hydraulics and pneumatics. Our knowhow has evolved primarily from solving customers' problems, combined with the extensive experience of the whole HYDAC group.

HYDAC Products

Our product range extends from simple pressure transmitters to the intelligent multiple pressure switches with customized software. In the field of sensors, we employ different techniques, enabling us to offer the most appropriate solution to a customer's specific application.

HYDAC Quality

HYDAC stands for quality and customer satisfaction. We are certified to ISO 9001 and can supply our products with certification if required. To ensure that our products are as innovative as possible, they are developed, manufactured, and tested by qualified personnel using advanced technology.

HYDAC Customer Service

Our internal staff and worldwide distribution network take care of the important matter of customer service. HYDAC values high standards, professional ethics, and mutual respect in all transactions with customers, vendors, and employees. We invest in our relationships by providing expertise, quality, dependability, and accessibility to foster growth and a sense of partnership. Our customer service representatives are committed to serving the customers' needs.

Energy and Environmental Technology
HYDAC Electronics have played a key role in providing innovative developments in hydroelectric, heating, wind, and waste power plants. HYDAC has vast expertise in solvent and waste water processing technologies.

Offshore Shipbuilding and Marine Technology
Maritime technology places special demands on material functionality and reliability. HYDAC products meet these demands due to our high quality and test standards. HYDAC products have been applied under the toughest conditions from drilling rigs to deep sea applications.

Mobile Market
The aim of our engineers has always been to reduce volume and weight, resulting in increased product performance. HYDAC provides compact high performance components for the Mobile Market, which can be found in construction, forestry, and agricultural equipment.

Industrial Engineering
Since we began, HYDAC has been involved in many industrial engineering applications. Our knowledge and expertise of many industries provides a comprehensive range of versatile hydraulic components. HYDAC offers custom solutions for machine tools, plastic injection molding machines, test equipment, presses, and welding robots. Other industrial applications include: steel and heavy industry, power transmissions, and paper mills.

Process Technology
The core products of HYDAC process technology are electronics, filters, and filtration systems for the industrial and environmental processing industries. HYDAC products are found in chemical, petrochemical, and plastics industries. Also, paper and dye production, foundries, steel manufacturing, and power plants.

Table of Contents

Overview

Markets / Industries. 2
ISO Certified 3

HDA Pressure Transducers

4100: Absolute Pressure. 4
4300: Low Pressure 6
4400: High Pressure, Medium Accuracy. 8
4700: High Pressure, High Accuracy. 10
4700: CANopen 12
4100: Absolute, Shipbuilding & Offshore 14
4300: Low Pressure, Shipbuilding and Offshore. 16
4400: High Pressure, Medium Accuracy,
Shipbuilding & Offshore 18
4700: High Pressure, High Accuracy,
Shipbuilding & Offshore 20
7000: Compact. 22
3800: Very High Accuracy 24
3800: Very High Accuracy, Steel Works 26

EDS Pressure Switches

3100: Absolute Pressure. 28
3300: Low Pressure 30
3400: High Pressure. 32
8000: Low Cost 34
300: with Display 36
300: Shipbuilding with Display 38
4300: Low, Programmable Switch 40
4400: High, Programmable Switch. 42
1700: with Display 44

ETS Temperature Transducers

4000: Temperature Transducer / Switch. 46
7000: Temperature Transducer / Switch. 48

ETS Temperature Switches

3200: for Inline and Tank Mounting 50
3800: with Separate Temperature Probe 52
320: for Inline and Tank Mounting 54
380: with Separate Temperature Probe 56
1700: with Display 58

ENS Level Sensor

3000: Level Transducer / Switch 60

EVS Flow Sensor

3100: Flow Transducer 62

HDA Display

5500: Intelligent Display Unit 64

Diagnostic Equipment

HMG
500: Hand Held Diagnostic Tool 66
510: Hand Held Diagnostic Tool 68
3000: Portable Data Recorder, Diagnostic System . . . 70
HDA 4700 HSI: Pressure Transducer 74
ETS 4548 HSI: Temperature Transducer 76
EVS 3100 HSI: Flow Transducer 78

Hazardous Environment Pressure Transducers & Switches

HDA Pressure Transducers ATEX
4100: Absolute, Intrinsically Safe, ATEX 80
4300: Low Pressure, Intrinsically Safe, ATEX 82
4400: High Pressure, Medium Accuracy
Intrinsically Safe, ATEX. 84
4700: High Pressure, High Accuracy,
Intrinsically Safe, ATEX. 86
EDS Pressure Switches ATEX
4100: Programmable, Absolute,
Intrinsically Safe, ATEX. 88
4300: Programmable, Low Pressure,
Intrinsically Safe, ATEX. 90
4400: Programmable, High Pressure,
Medium Accuracy, Intrinsically Safe, ATEX. . . . 92
HDA Pressure Transducers CSA
4100: Absolute, Intrinsically Safe, CSA. 94
4300: Low Pressure, Intrinsically Safe, CSA. 96
4700: High Pressure, Intrinsically Safe, CSA. 98
HDA Pressure Transducers CSA, ATEX, IEC Ex
4700: High Pressure, CSA, ATEX, IEC Ex. Proof 100
EDS Pressure Switches CSA, ATEX, IEC Ex
4000: Programmable, CSA, ATEX, IEC Ex. Proof . . . 102
ETS Temperature Transducer CSA, ATEX, IEC Ex
4000: CSA, ATEX, IEC Ex. Proof 104

Fluid Condition Sensors

HYDAC Lab: Fluid Condition Sensor 106
AS 1000: AquaSensor. 108
CS 1000: Contamination Sensor. 110
CMU 1000: Condition Monitoring Unit. 114
CSI-F-10: GSM Radio Module 116
CSI-B-2: Condition Monitoring Interface Module . . . 118

OEM Products - Minimum Quantities Required

HDA Pressure Transducer
8000: 120
EDS Pressure Switches
410: Factory Set 122
710: Factory Set 124
810: Factory Set 126
4100: Factory Set Absolute, Intrinsically Safe, ATEX 128
4300: Low, Intrinsically Safe, ATEX 130
4400: High, Intrinsically Safe, ATEX 132
410: Factory Set, CSA, ATEX, IEC Ex. Proof 134

Accessories

1620: TestPoints. 136
TFP 100 138
Safety Sleeve TFP 100 138
ZBM 3200 Protective Cover 139
Mounting Kits 139
Mechanical Adapters 140
Snubber Adapters 141
Mechanical Adapter 142
Electrical Connectors 143

Markets / Industries

There is almost no hydraulic or pneumatic medium or system, which could not be monitored and controlled by HYDAC measurement technology - quickly, precisely and safely.

It is not surprising, therefore, that individually designed HYDAC measurement technology is employed by well-known manufacturers and operators in all industries.

These applications range from analysis and diagnostics of operating fluids in the laboratory and on site, to controlling complex industrial systems and to miniaturised systems in construction and road vehicles.

Mobile/Construction Equipment

Electronic controls and sensors to complete the system electronics.
- Max. load regulation
- Electro-hydraulic load sensing
- Integrated collection of operating data
- Controls of special equipment
- Cut-off devices
- Safety cut-off devices

Sensor technology and system electronics to generate modern control concepts or ready-to-install total concepts.
- Load collectives
- Condition monitoring
- Safety systems
- Load limiting
- Function controls
- Energy management

Telescopic Cranes

Sensor technology and system electronics to generate modern control concepts or ready-to-install total concepts.
- Load torque limiting
- Load collectives
- Load sensing
- Max. load regulation
- Energy management
- Condition monitoring

Municipal Machines

Sensors, system electronics and condition monitoring.
- Working hydraulics
- Axle suspension systems
- Cab suspension systems
- Levelling systems

Tractors / Agricultural Technology

Sensors, system electronics and condition monitoring.
- Cab suspension
- Central hydraulics
- Front axle suspension
- Transmission circuit
- Level control
- Anti-roll stabilisation

Electronic controls and sensors to complete the system electronics.
- Max. load regulation
- Electro-hydraulic load sensing
- Integrated collection of operating data
- Controls of special equipment
- Cut-off devices
- Safety cut-off devices

Mining

Electronic measurement technology for underground applications.
- Pump station / Media supply
- Mining of raw materials
- Heading
- Material-handling and passenger transportation
- Analysis and diagnostics
- Condition monitoring

Heavy Metals (Iron - Steel)

Measuring technology and electronics.
- Pump stations
- Valve stands
- Accumulator stations
- Heat exchangers
- Condition monitoring

Machine tools

Sensors, system electronics and condition monitoring.
- Hydraulic counter-balance
- Hydrostatic slide bearing
- Pressure boost station
- Central processing of cooling lubricants
- Tool clamping device

Pulp and Paper Industry

Sensors, system electronics and condition monitoring.

Automotive Production

Measurement technology and condition monitoring for machine tools and presses, cooling lubricant supply and test rigs.

Aviation and Aerospace Industry

Sensors, system electronics and condition monitoring.
- Rocket test rigs
- Test rigs for aircraft hydraulics
- Satellite test rigs
- Flight simulators

Wind Turbines

Sensors, system electronics and condition monitoring.
- Condition monitoring of hydraulic and lubrication oils
- Measurement technology
- Safety and yaw brakes
- Pitch control
- Performance testing stations for transmission systems

Power Plant Technology

Sensors, system electronics and condition monitoring.
- Condition monitoring of hydraulic and lubrication oils
- Hydraulic drive and control systems including electronic controls

Oil and Gas Industry

Sensors, system electronics and condition monitoring for offshore or onshore applications.

Condition Monitoring

Collection and interpretation of data providing information on the condition of machines, systems and their components.

Ship Building

Measurement technology and monitoring for
- Engine
- Control of motion
- Steering gear, propeller
- Ballast water control
- Deck structure and equipment

Railways

Measurement technology for
- Brake system (air, hydraulics)
- Compressors (door system)

Industrial

Measuring technology and electronics.
- Pump stations
- Valve stands
- Accumulator stations
- Heat exchangers
- Condition monitoring

Gearboxes

Measurement technology for
- Lubrication pressure and temperature

ISO Certified

HYDAC has become a leader in hydraulics and pneumatics. We have earned that role by emphasizing quality, innovation, and excellence in everything we manufacture. HYDAC is committed to maintaining those high standards of quality and service in accordance with the ISO 9001 International Standard and QS-9000 Automotive Standard.

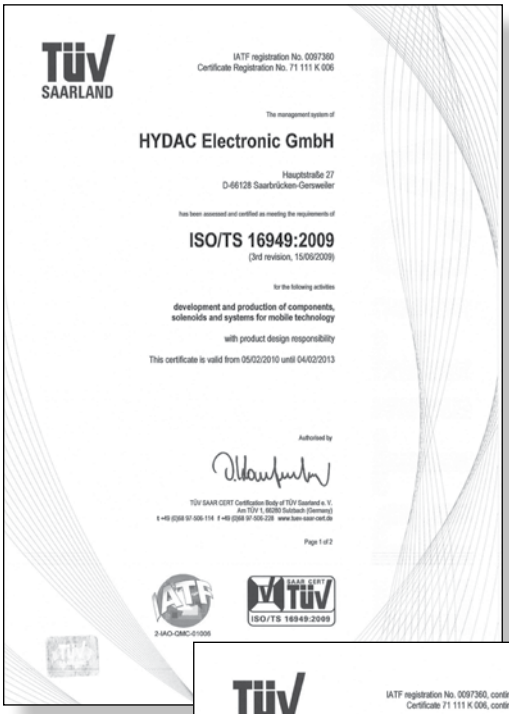

TÜV SAARLAND

IATF registration No. 0097360
Certificate Registration No. 71 111 K 006

The management system of

HYDAC Electronic GmbH

Hauptstraße 27
D-66128 Saarbrücken-Gersweiler

has been assessed and certified as meeting the requirements of

ISO/TS 16949:2009
(3rd revision, 15/09/2009)

for the following activities

development and production of components, solenoids and systems for mobile technology

with product design responsibility

This certificate is valid from 05/02/2010 until 04/02/2013

Authorised by

TÜV SAAR CERT Certification Body of TÜV Saarland e. V.
Am TÜV 1, 66280 Sulzbach (Germany)
t +49 (0)68 97-506-114 f +49 (0)68 97-506-228 www.tuev-saar-cert.de

Page 1 of 2

2-IAO-QMC-01006

ISO/TS 16949:2009

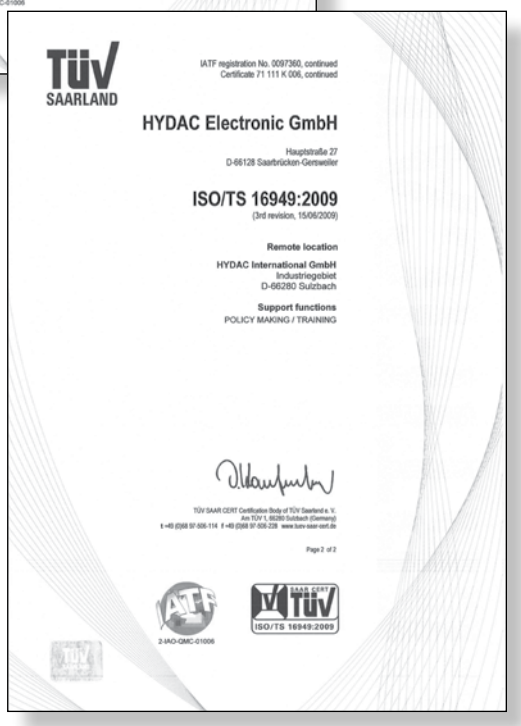

TÜV SAARLAND

IATF registration No. 0097360, continued
Certificate 71 111 K 006, continued

HYDAC Electronic GmbH

Hauptstraße 27
D-66128 Saarbrücken-Gersweiler

ISO/TS 16949:2009
(3rd revision, 15/09/2009)

Remote location

HYDAC International GmbH
Industriegebiet
D-66280 Sulzbach

Support functions
POLICY MAKING / TRAINING

TÜV SAAR CERT Certification Body of TÜV Saarland e. V.
Am TÜV 1, 66280 Sulzbach (Germany)
t +49 (0)68 97-506-114 f +49 (0)68 97-506-228 www.tuev-saar-cert.de

Page 2 of 2

2-IAO-QMC-01006

ISO/TS 16949:2009

HDA 4100 Series
Absolute Pressure Transducer

Applications

Description

The pressure transmitter series HDA 4100 has a ceramic pressure measurement cell *(with a thickfilm strain gauge)* which has been specially developed for measuring absolute pressure in the low pressure range.

The output signals 4 to 20 mA or 0 to 10 V allow for all HYDAC electronic measurement and control devices to be connected, as well as industry standard control and monitoring instruments.

The main areas of application are low pressure applications in hydraulics and pneumatics, particularly in refrigeration and air conditioning technology, the food and pharmaceutical industries.

Special Features

- Accuracy ≤ ±0.5% BFSL
- Very small temperature error
- Excellent EMC characteristics
- Very compact design
- Excelent price / performance ratio

Approvals

CE mark is a mandatory conformity mark on many products placed on the single market in the European Economic Area

Technical Details

Sensor Specifications	
Measuring ranges - psi	15, 50
Overload pressure - psi	45, 100
Burst pressure - psi	70, 150
Mechanical connection	G1/4A DIN 3852 male *(bar ranges only)* 1/4”-18 NPT male *(psi ranges only)* other connections upon request
Tightening torque	G1/4: 15 lb-ft (20 Nm) 1/4” NPT: 30 lb-ft (40 Nm)
Parts in contact with media	Ceramic, FPM or EPDM seal, stainless steel
Accuracy (B.F.S.L.) including linearity, hysteresis, and repeatability	≤ ±0.5% BFSL
Temperature compensation zero point	≤ ±0.012% / °F typ. ≤ ±0.017% / °F max.
Temperature compensation over range	≤ ±0.012% / °F typ. ≤ ±0.017% / °F max.
Rise time	≤ 1 ms
Long-term drift	≤ ± 0.3% FS typ. / year
Life expectancy	10 million load cycles (0 to 100% FS)
Weight	Approximately 145 g
Output signal	4 to 20 mA, 2 wire, R_{Lmax} = (UB - 10V) / 20 mA [kΩ] 0 to 10 V, 3 wire, R_{Lmin} = 2 kΩ
Environmental Condition	
Compensated temperature range	32° to 176°F (0° to 80°C)
Operating temperature range	-13° to 185°F (-25° to 85°C)
Storage temperature range	-40° to 212°F (-40° to 100°C)
Media temperature range	-40° to 212°F (-40° to 100°C)
CE mark	EN 61000-6-1 / 2 / 3 / 4
Vibration resistance to DIN EN 60068-2-6 at 10 to 500 Hz	≤ 20g
Environmental protection	IP 65 *(DIN 43650 and M18x1 connectors)* IP 67 *(ZBE 06 molded cable)*
Electrical Specifications	
Supply voltage, 2-wire	10 to 30 VDC
Supply voltage, 3-wire	12 to 30 VDC
Residual ripple suppy voltage	≤ 5%
Max supply current, 3-wire	approximately 25 mA
Reverse polarity protection of the supply voltage, excess voltage, override and short circuit protection	Standard

Model Code

HDA 4 1 X X - X - XXXX - 000 - X1 (PSI)

Mechanical Connection*
- 4 = G1/4A DIN 3852 male *(bar ranges only)*
- 8 = 1/4-18 NPT, male *(psi ranges only)*

Electrical Connection*
- 4 = 4 pole plug M18x1 *(connector not included)*
- 5 = DIN 43650/ISO 4400 plug, 3 pole + ground *(connector ZBE 01 included)*
- 6 = M12x1 plug, 4-pole *(connector not included)*

Output Signal*
- A = 2 conductor, 4-20 mA
- B = 3 conductor, 0-10 VDC

Pressure Range
for HDA 418X only *(1/4-18 NPT)*
0015, 0050 psi

Modification Number
000 = Standard

Seal material *(in contact with fluid)*
- F1 = FPM-seal *(hydraulic oil)*
- E1 = EPDM-seal *(water, coolant, ammonia)*

(psi)
psi version *(leave blank for bar version)*

**Other options upon request*

Pin Connections

Binder Series 714 M18

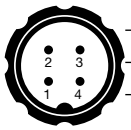

Pin	HDA 41x4-A	HDA 41x4-B
1	nc	$+U_B$
2	Signal +	Signal
3	Signal -	0 V
4	nc	nc

DIN 43650

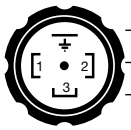

Pin	HDA 41x5-A	HDA 41x5-B
1	Signal +	$+U_B$
2	Signal -	0 V
3	nc	Signal
4	PE	PE

M12x1

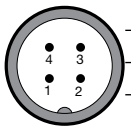

Pin	HDA 41x6-A	HDA 41x6-B
1	Signal +	$+U_B$
2	nc	nc
3	Signal -	0 V
4	nc	Signal

Circuit Diagram

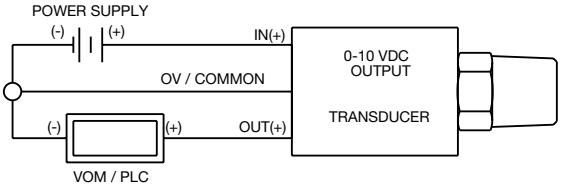

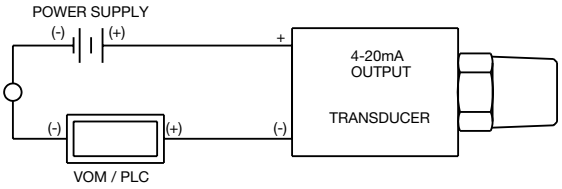

Dimensions

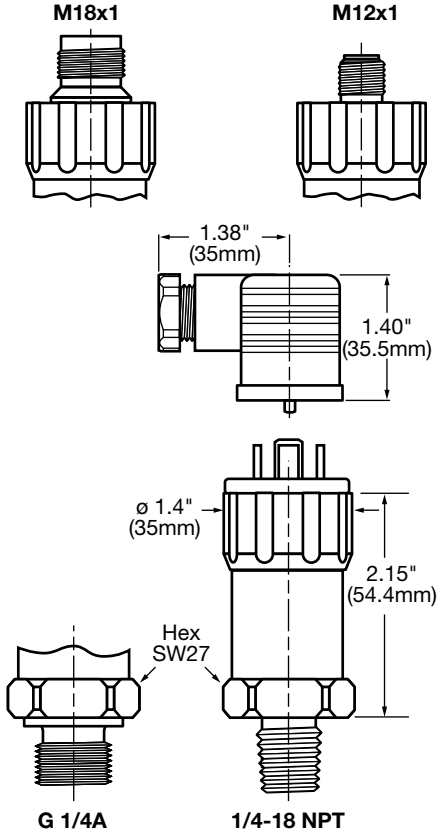

HDA 4300 Series
Low Pressure Transducer

Applications

Description

The pressure transmitter series HDA 4300 has a ceramic pressure measurement cell *(with a thickfilm strain gauge)* which has been specially developed for use at low pressures.

The output signals 4 to 20 mA or 0 to 10 V allow for all HYDAC electronic measurement and control devices as well as other standard control and monitoring instruments to be connected.

The main areas of application are low pressure applications in hydraulics and pneumatics, particularly in refrigeration and air conditioning technology, the food and pharmaceutical industries.

Special Features

- Accuracy ≤ ±0.5% BFSL
- Very small temperature error
- Excellent EMC characteristics
- Very compact design
- Excellent price / performance ratio

Approvals

CE mark is a mandatory conformity mark on many products placed on the single market in the European Economic Area

Technical Details

Sensor Specifications	
Measuring ranges - psi	-14.5 to 135.5, 15, 50, 100, 150, 250, 500
Overload pressure - psi	450, 45, 150, 290, 450, 725, 1500
Burst pressure - psi	650, 70, 250, 400, 650, 1000, 2500
Mechanical connection	G1/4A DIN 3852 male *(bar ranges only)* 1/4”-18 NPT male *(psi ranges only)* other connections upon request
Tightening torque	G1/4: 15 lb-ft (20 Nm) 1/4” NPT: 30 lb-ft (40 Nm)
Parts in contact with media	Ceramic, FPM or EPDM seal, Stainless steel
Accuracy (B.F.S.L.) including linearity, hysteresis, and repeatability	≤ ±0.5% BFSL
Temperature compensation zero point	≤ ±0.012% / °F typ. ≤ ±0.017% / °F max.
Temperature compensation over range	≤ ±0.012% / °F typ. ≤ ±0.017% / °F max.
Rise time	≤ 1 ms
Long-term drift	≤ ±0.3% FS typ. / year
Life expectancy	10 million load cycles (0 to 100% FS)
Weight	Approximately 145 g
Output signal	4 to 20 mA, 2 wire, R_{Lmax} = (UB - 10V) / 20 mA [kΩ] 0 to 10 V, 3 wire, R_{Lmin} = 2 kΩ
Environmental Condition	
Compensated temperature range	32° to 176°F (0° to 80°C)
Operating temperature range	-13° to 185°F (-25° to 85°C)
Storage temperature range	-40° to 212°F (-40° to 100°C)
Media temperature range	-40° to 212°F (-40° to 100°C)
CE mark	EN 61000-6-1 / 2 / 3 / 4
Vibration resistance to DIN EN 60068-2-6 at 10 to 500 Hz	≤ 20g
Environmental protection	IP 65 *(DIN 43650 and M18x1 connectors)* IP 67 *(ZBE 06 molded cable)*
Electrical Specifications	
Supply voltage, 2-wire	10 to 30 VDC
Supply voltage, 3-wire	12 to 30 VDC
Residual ripple suppy voltage	≤ 5%
Max supply current, 3-wire	approximately 25 mA
Reverse polarity protection of the supply voltage, excess voltage, override and short circuit protection	Standard

Model Code

HDA 4 3 X X - X - XXXX - 000 X1 (PSI)

Mechanical Connection*
- 4 = G1/4A DIN 3852 male *(bar ranges only)*
- 8 = 1/4-18 NPT, male *(psi ranges only)*

Electrical Connection*
- 4 = 4 pole plug M18x1 *(connector not included)*
- 5 = DIN 43650/ISO 4400 plug, 3 pole + ground *(connector ZBE 01 included)*
- 6 = M12x1 plug, 4-pole *(connector not included)*

Output Signal*
- A = 2 conductor, 4-20 mA
- B = 3 conductor, 0-10 VDC

Pressure Range
for HDA 438X only *(1/4-18 NPT)*
0135 (-14.5 to 135.5 psi), 0015, 0030, 0050, 0100, 0150, 0250, 0500 psi

Modification Number
000 = Standard

Seal material *(in contact with fluid)*
- F1 = FPM-seal *(hydraulic oil)*
- E1 = EPDM-seal *(water, coolant, ammonia)*

(psi)
psi version *(leave blank bar version)*

**Other options upon request*

Pin Connections

Binder Series 714 M18

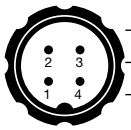

Pin	HDA 43x4-A	HDA 43x4-B
1	nc	$+U_B$
2	Signal +	Signal
3	Signal -	0 V
4	nc	nc

DIN 43650

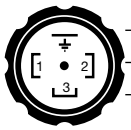

Pin	HDA 43x5-A	HDA 43x5-B
1	Signal +	$+U_B$
2	Signal -	0 V
3	nc	Signal
4	PE	PE

M12x1

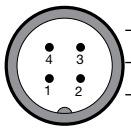

Pin	HDA 43x6-A	HDA 43x6-B
1	Signal +	$+U_B$
2	nc	nc
3	Signal -	0 V
4	nc	Signal

Circuit Diagram

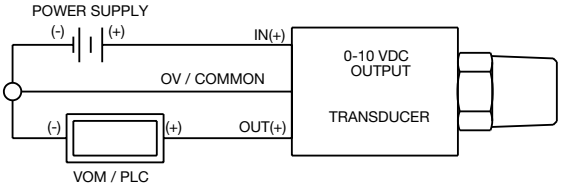

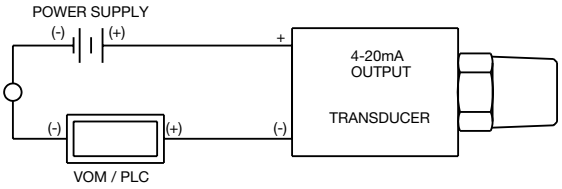

Dimensions

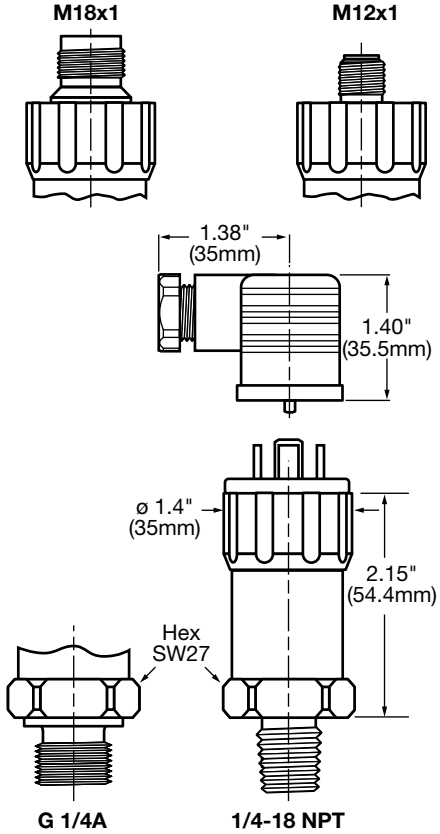

HDA 4400 Series

High Pressure Transducer, Medium Accuracy

Applications

Description

The pressure transmitter series HDA 4400 has a very accurate and robust sensor cell with a thin-film strain gauge on a stainless steel membrane.

The output signals 4 to 20 mA or 0 to 10 V allow for all HYDAC ELECTRONIC measurement and control devices as well as standard evaluation systems *(e.g. PLC controls)* to be connected.

The main areas of application are in the mobile or industrial sectors of hydraulics and pneumatics, particularly in applications with restricted installation space.

Special Features

- Accuracy ±0.5% BFSL
- Highly robust sensor cell
- Very small temperature error
- Excellent EMC characteristics
- Very compact design
- Excelent price / performance ratio

Approvals

CE mark is a mandatory conformity mark on many products placed on the single market in the European Economic Area

Technical Details

Sensor Specifications	
Measuring ranges - psi	150, 500, 750, 1000, 1500, 3000, 6000, 9000
Overload pressure - psi	290, 1160, 1160, 2900, 2900, 7250, 11600, 14500
Burst pressure - psi	1450, 2900, 2900, 7250, 7250, 14500, 29000, 29000
Mechanical connection	G1/4A DIN 3852 male *(bar ranges only)* SAE 6 9/16-18 UNF 2A *(psi ranges only)* other connections upon request
Tightening torque	15 lb-ft (20 Nm)
Parts in contact with media	Stainless Steel, FPM seal
Accuracy (B.F.S.L.) including linearity, hysteresis, and repeatability	≤ ±0.5% BFSL
Temperature compensation zero point	≤ ±0.0085% FS / °F typ. ≤ ±0.014% FS / °F max.
Temperature compensation over range	≤ ±0.0085% FS / °F typ. ≤ ± 0.014% FS / °F max.
Rise time	≤ 1 ms
Long-term drift	≤ ±0.3% FS typ. / year
Life expectancy	10 million load cycles (0 to 100% FS)
Weight	Approximately 145 g
Output signal	4 to 20 mA, 2 wire, R_{Lmax} = (UB - 10V) / 20 mA [kΩ] 0 to 10 V, 3 wire, R_{Lmin} = 2 kΩ
Environmental Condition	
Compensated temperature range	32° to 158°F (0° to 70°C)
Operating temperature range	-13° to 185°F (-25° to 85°C)
Storage temperature range	-40° to 212°F (-40° to 100°C)
Media temperature range	-40° to 212°F (-40° to 100°C)
CE mark	EN 61000-6-1 / 2 / 3 / 4
Vibration resistance to DIN EN 60068-2-6 at 10 to 500 Hz	≤ 20g
Environmental protection	IP 65 *(DIN 43650 and M18x1 connectors)* IP 67 *(ZBE 06 molded cable)*
Electrical Specifications	
Supply voltage, 2-wire	10 to 30 VDC
Supply voltage, 3-wire	12 to 30 VDC
Residual ripple suppy voltage	≤ 5%
Max Supply current, 3-wire	approximately 25 mA
Reverse polarity protection of the supply voltage, excess voltage, override and short circuit protection	Standard

Model Code

HDA 4 4 X X - X - XXXX - 000 - (PSI)

Mechanical Connection*
- 4 = G1/4A DIN 3852 male *(bar ranges only)*
- 7 = SAE 6 9/16-18 UNF2A *(psi ranges only)*

Electrical Connection*
- 4 = 4 pole plug M18x1, Binder Series *(connector not included)*
- 5 = DIN 43650 / ISO plug, 3 pole + ground *(connector ZBE 01 included)*
- 6 = M12x1 plug, 4 pole *(connector not included)*

Output Signal*
- A = 4-20mA, 2-wire
- B = 0-10VDC, 3-wire

Pressure Range
for HDA 447X only *(SAE 6 9/16-18 UNF 2A)*
0150, 0500, 0750, 1000, 1500, 3000, 5000, 6000, 9000 psi

Modification Number
000 = Standard

(psi)
psi version *(leave blank for bar version)*

**Other opions available upon request*

Pin Connections

Binder Series 714 M18

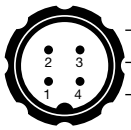

Pin	HDA 44x4-A	HDA 44x4-B
1	nc	$+U_B$
2	Signal +	Signal
3	Signal -	0 V
4	nc	nc

DIN 43650

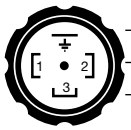

Pin	HDA 44x5-A	HDA 44x5-B
1	Signal +	$+U_B$
2	Signal -	0 V
3	nc	Signal
4	PE	PE

M12x1

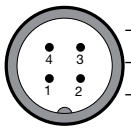

Pin	HDA 44x6-A	HDA 44x6-B
1	Signal +	$+U_B$
2	nc	nc
3	Signal -	0 V
4	nc	Signal

Circuit Diagram

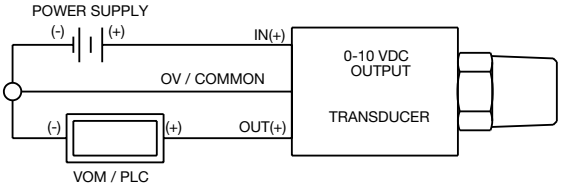

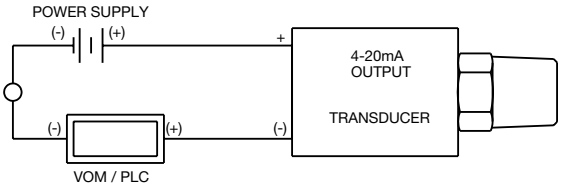

Dimensions

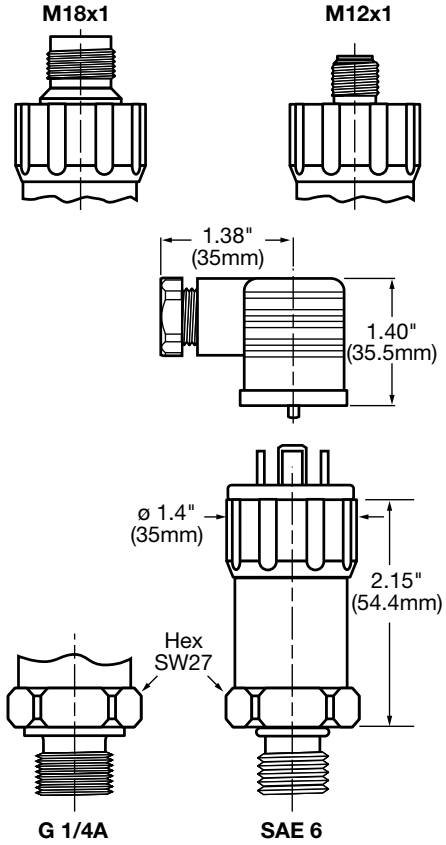

HDA 4700 Series

High Pressure Transducer, High Accuracy

Applications

Description

The pressure transmitter series HDA 4700 has a very accurate and robust sensor cell with a thin-film strain gauge on a stainless steel membrane.

The output signals 4 to 20 mA or 0 to 10 V allow for all HYDAC ELECTRONIC measurement and control devices as well as standard evaluation systems *(e.g. PLC controls)* to be connected.

The main areas of application are in the mobile or industrial sectors of hydraulics and pneumatics, particularly in applications with restricted installation space.

Special Features

- Accuracy ≤ ±0.25% BFSL
- Highly robust sensor cell
- Very small temperature error
- Excellent EMC characteristics
- Very compact design
- Excellent price / performance ratio

Approvals

CE mark is a mandatory conformity mark on many products placed on the single market in the European Economic Area

Technical Details

Sensor Specifications	
Measuring ranges - psi	150, 500, 750, 1000, 1500, 3000, 6000, 9000
Overload pressure - psi	290, 1160, 1160, 2900, 2900, 7250, 11600, 14500
Burst pressure - psi	1450, 2900, 2900, 7250, 7250, 14500, 29000, 29000
Mechanical connection	G1/4A DIN 3852 male *(bar ranges only)* SAE 6 9/16-18 UNF 2A *(psi ranges only)* other connection upon request
Tightening torque	15 lb-ft (20 Nm)
Parts in contact with media	Stainless Steel, FPM seal
Accuracy (B.F.S.L.) including linearity, hysteresis, and repeatability	≤ ±0.25% BFSL
Temperature compensation zero point	≤ ±0.0045% FS / °F typ. ≤ ±0.0085% FS / °F max.
Temperature compensation over range	≤ ±0.0045% FS / °F typ. ≤ ±0.0085% FS / °F max.
Rise time	≤ 1 ms
Long-term drift	≤ ±0.1% FS typ. / year
Life expectancy	10 million load cycles (0 to 100% FS)
Weight	Approximately 145 g
Output signal	4 to 20 mA, 2 wire, R_{Lmax} = (UB - 10V) / 20 mA [kΩ] 0 to 10 V, 3 wire, R_{Lmin} = 2 kΩ
Environmental Condition	
Compensated temperature range	-13° to 185°F (-25° to 85°C)
Operating temperature range	-40° to 185°F (-40° to 85°C)
Storage temperature range	-40° to 212°F (-40° to 100°C)
Media temperature range	-40° to 212°F (-40° to 100°C)
CE mark	EN 61000-6-1 / 2 / 3 / 4
Vibration resistance to DIN EN 60068-2-6 at 10 to 500 Hz	≤ 20g
Environmental protection	IP 65 *(DIN 43650 and M18x1 connectors)* IP 67 *(ZBE 06 molded cable)*
Electrical Specifications	
Supply voltage, 2-wire	10 to 30 VDC
Supply voltage, 3-wire	12 to 30 VDC
Residual ripple suppy voltage	≤ 5%
Max supply current, 3-wire	approximately 25 mA
Reverse polarity protection of the supply voltage, excess voltage, override and short circuit protection	Standard

Model Code

HDA 4 7 X X - X - XXXX - 000 (PSI)

Mechanical Connection*
4 = G 1/4 A DIN 3852, male *(bar ranges only)*
7 = SAE 6, 9/16-18 UNF 2A male *(psi ranges only)*

Electrical Connection*
4 = 4 pole plug M18x1 *(connector not included)*
5 = DIN 43650/ISO 4400 plug, 3 pole + ground *(connector ZBE 01 included)*
6 = M12x1 plug, 4-pole *(connector not included)*

Output Signal*
A = 2 conductor, 4-20 mA
B = 3 conductor, 0-10 VDC

Pressure Range
For HDA 477X only *(SAE 6 9/16-18 UNF2A male)*
0150, 0500, 0750, 1000, 1500, 3000, 5000, 6000, 9000 psi

Modification Number
000 = Standard

(psi)
psi version *(Leave blank for bar version)*

**Other options available upon request*

Pin Connections

Binder Series 714 M18

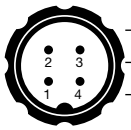

Pin	HDA 47x4-A	HDA 47x4-B
1	nc	$+U_B$
2	Signal +	Signal
3	Signal -	0 V
4	nc	nc

DIN 43650

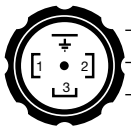

Pin	HDA 47x5-A	HDA 47x5-B
1	Signal +	$+U_B$
2	Signal -	0 V
3	nc	Signal
4	PE	PE

M12x1

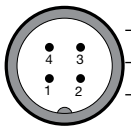

Pin	HDA 47x6-A	HDA 47x6-B
1	Signal +	$+U_B$
2	nc	nc
3	Signal -	0 V
4	nc	Signal

Circuit Diagram

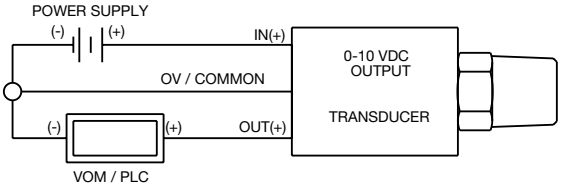

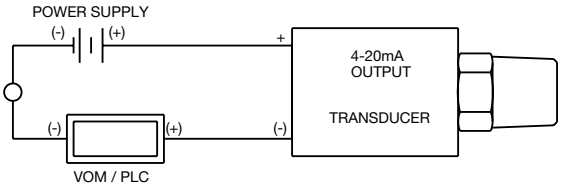

Dimensions

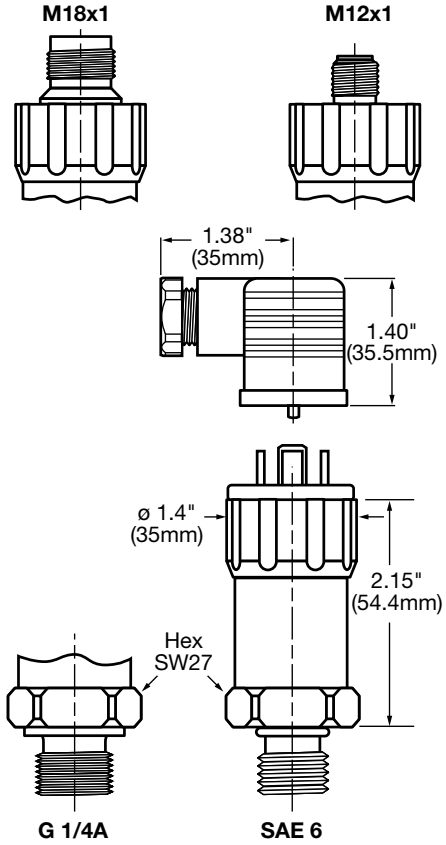

HDA 4700 Series
CANopen Pressure Transducer

Applications

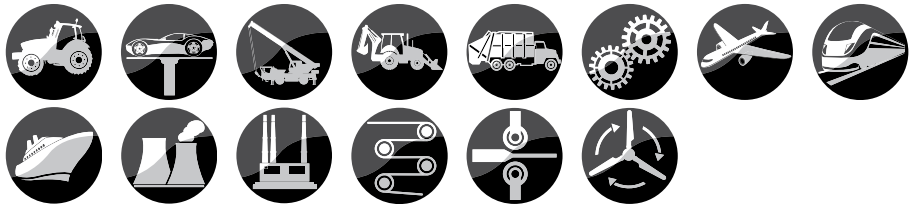

Description

The HDA 4700 CAN is a digital pressure transmitter which is used to measure relative pressures in hydraulics and pneumatics. The measured pressure value is digitized and made available to the CAN field bus system via CANopen protocol. The unit parameters can be viewed and configured by the user via the CANopen object directory using standard CAN software.

This pressure transmitter, which is based on the HDA 4700, has a very accurate and robust sensor cell with a thin-film strain gauge on a stainless steel membrane.

Due to their outstanding temperature and EMC characteristics, together with their compact dimensions, these units can be used in a wide range of applications in the mobile and industrial sectors.

Special Features

- CANopen interface
- Accuracy ≤ ±0.25% BFSL
- Robust thin-film cell
- Excellent EMC characteristics
- Very compact design

Approvals

CE mark is a mandatory conformity mark on many products placed on the single market in the European Economic Area

Technical Details

Sensor Specifications	
Measuring ranges - psi	500, 750, 1000, 1500, 3000, 6000, 9000
Overload pressure - psi	1160, 1160, 2900, 2900, 7250, 11600, 14500
Burst pressure - psi	2900, 2900, 7250, 7250, 14500, 29000, 29000
Mechanical connection	G1/4A DIN 3852 male *(standard for bar ranges only)* SAE 6 9/16-18 UNF 2A *(standard for psi ranges only)* other connections upon request
Tightening torque	Approx. 15 lb-ft (20 Nm)
Parts in contact with media	Stainless-Steel, FPM seal
Accuracy (B.F.S.L.) including linearity, hysteresis, and repeatability	≤ ±0.25% BFSL
Temperature compensation zero point	≤ ±0.0045%FS/°F typ. ≤ ±0.0085%FS/°F max.
Temperature compensation over range	≤ ±0.0045%FS/°F typ. ≤ ±0.0085%FS/°F max.
Rise time	≤ 1 ms
Long-term drift	≤ ±0.1%FS typ./year
Life expectancy	10 million load cycles (0 to 100% FS)
Weight	Approximately 145 g
Environmental Condition	
Compensated temperature range	-13° to 185°F (-25° to 85°C)
Operating temperature range	-40° to 185°F (-40° to 85°C)
Storage temperature range	-40° to 212°F (-40° to 100°C)
Media temperature range	-40° to 212°F(-40° to 100°C)
CE mark	EN 61000-6-1 / 2 / 3 / 4
Vibration resistance to DIN EN 60068-2-6 at 10 to 500 Hz	≤ 20g
Environmental protection	IP 67 *(ZBE 06 molded cable)*
Electrical Specifications	
Supply voltage	10 to 35 VDC
Residual ripple suppy voltage	≤ 5%
Max supply current	approximately 25 mA
Reverse polarity protection of the supply voltage, excess voltage, override and short circuit protection	Standard
Communication profile	DS301 V4.02
Device profile	DS404.V1.2
Baud rates	10 kbit. 1 Mbit coressp. to DS305 V1.1
Transmission services -PDO -Transfer	Measured value as 16/32 bit, status synchronous, asynchronous, cyclical, measured value change, exceedong boundaries.
Node ID/Baudrate	Can be set via manufacturer specific profile

Model Code

HDA 4 7 X 8 - K - XXXX - 000 (PSI)

Mechanical Connection
4 = G1/4A DIN 3852 male *(bar ranges only)*
7 = SAE 6 9/16-18 UNF2A *(psi ranges only)*

Electrical Connection
8 = M12x1 plug, 5 pole (connector not included)

Output Signal
K = CANopen

Pressure Range
for HDA 4778 only *(SAE 6 9/16-18 UNF2A)*
0500, 0750, 1000, 1500, 3000, 5000, 6000, 9000 psi

Modification Number
000 = Standard

(psi)
psi version *(leave blank for bar version)*

Pin Connections

M12x1

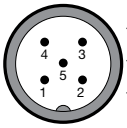

Pin 1	PE	shield/housing
Pin 2	$+U_B$	supply +
Pin 3	0 V	supply -
Pin 4	CAN_H	bus line dominant high
Pin 5	CAN_L	bus line dominant low

Dimensions

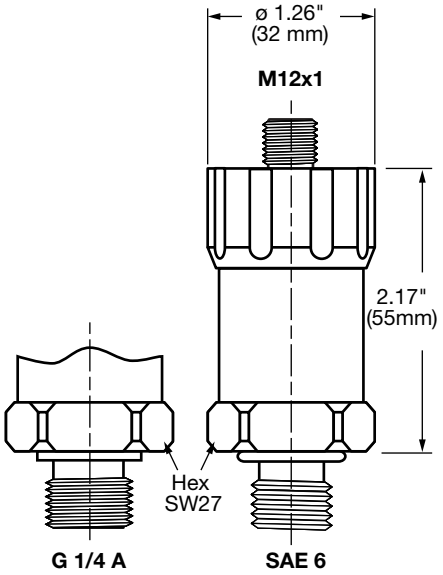

HDA 4100 Series

Absolute Pressure Transducer
Shipbuilding & Offshore

Applications

Description

This pressure transmitter has been specially developed for shipbuilding applications and is based on the HDA 4000 series.

The HDA 4100 has a ceramic measurement cell with thick-film strain gauge for measuring absolute pressure in the low pressure range. The evaluation electronics converts the measured pressure into a proportional analog signal of 4 to 20 mA.

The electronic module is completely potted to protect it against humidity, vibrations and shock, and is enclosed in a solid stainless steel housing.

For use in the shipping industry, these pressure transmitters have been approved by the following organisations.

Approvals

CE mark is a mandatory conformity mark on many products placed on the single market in the European Economic Area

American Bureau of Shipping

German Lloyd - GL

Bureau Veritas

Lloyds Register of Shipping - LRS

Det Norske Veritas - DNV

Technical Details

Sensor Specifications	
Measuring ranges - psi	15, 50
Overload pressure - psi	45, 100
Burst pressure - psi	70, 150
Mechanical connection	G1/4A DIN 3852 male *(standard for bar ranges only)* 1/4”-18 NPT male *(standard for psi ranges only)* other connections upon request
Tightening torque	G1/4: 15 lb-ft (20 Nm) 1/4” NPT: 30 lb-ft (40 Nm)
Parts in contact with media	Ceramic, FPM or EPDM seal, Stainless Steel
Accuracy (B.F.S.L.) including linearity, hysteresis, and repeatability	≤ ±0.5% BFSL
Temperature compensation zero point	≤ ±0.012%/°F typ. ≤ ±0.017%/°F max.
Temperature compensation over range	≤ ±0.012%/°F typ. ≤ ±0.017%/°F max.
Rise time	≤ 1 ms
Long-term drift	≤ ±0.3%FS typ./year
Life expectancy	10 million load cycles (0 to 100% FS)
Weight	Approximately 150 g
Output signal	4 to 20 mA, 2 wire, R_{Lmax} = (UB - 10V) / 20 mA [kΩ]
Environmental Condition	
Compensated temperature range	-32° to 176°F (0° to 80°C)
Operating temperature range	-13° to 185°F (-25° to 85°C)
Storage temperature range	-22° to 212°F (-30° to 100°C)
Media temperature range	-13° to 212°F (-25° to 100°C)
CE mark	EN 61000-6-1 / 2 / 3 / 4
Vibration resistance to DIN EN 60068-2-6 at 10 to 500 Hz	≤ 20g
Environmental protection	IP 65 *(DIN 43650 connectors)* IP 67 *(ZBE 06 molded cable)*
Other Data	
Supply voltage, 2-wire	10 to 30 VDC
Residual ripple suppy voltage	≤ 5%
Reverse polarity protection of the supply voltage, excess voltage, override and short circuit protection	Standard

Model Code

HDA 4 1 X X - X - XXXX - S00 X1 (PSI)

Mechanical Connection*
4 = G1/4A DIN 3852 male *(bar ranges only)*
8 = 1/4"-18 NPT *(psi ranges only)*

Electrical Connection*
5 = DIN 43650 / ISO plug, 3 pole + ground *(connector ZBE 01 included)*
6 = M12x1 plug, 4 pole *(connector not included)*

Output Signal
A = 4-20mA, 2-wire

Pressure Range
For HDA 418X only *(1/4"-18 NPT)*
0015, 0050 psi

Modification Number
S00 = with Shipbuilding approvals

Seal Material
F1 = FPM Seal *(hydraulic oil)*
E1 = EPDM Seal *(coolant, ammonia, water)*

(psi)
psi version *(leave blank for bar version)*

**Other options available upon request*

Pin Connections

DIN 43650

Pin	HDA 41X5-A
1	Signal +
2	Signal -
3	nc
4	PE

M12x1

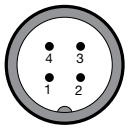

Pin	HDA 41X6-A
1	Signal +
2	nc
3	Signal -
4	nc

Circuit Diagram

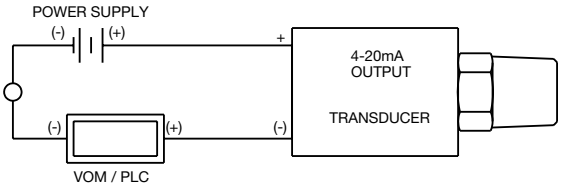

Dimensions

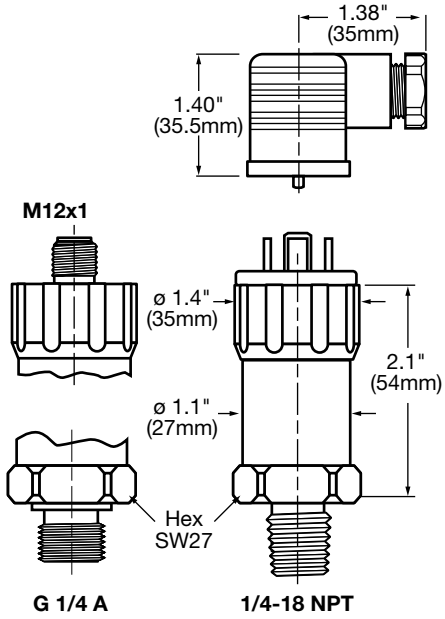

HDA 4300 Series

Low Pressure Transducer
Shipbuilding & Offshore

Applications

Description

This pressure transmitter has been specially developed for the shipbuilding industry and is based on the HDA 4000 series.

With its ceramic measurement cell *(with thick-film strain gauge)* the HDA 4300 is designed to measure relative pressures in the low pressure range.

The evaluation electronics converts the measured pressure into a proportional analog signal of 4 to 20 mA.

The electronic module is completely potted to protect it against humidity, vibrations and shock, and is enclosed in a solid stainless steel housing.

For use in the shipping industry, these pressure transmitters have been approved by the following organisations.

Approvals

CE mark is a mandatory conformity mark on many products placed on the single market in the European Economic Area

American Bureau of Shipping

German Lloyd - GL

Bureau Veritas

Lloyds Register of Shipping - LRS

Det Norske Veritas - DNV

Technical Details

Sensor Specifications	
Measuring ranges - psi	15, 30, 50, 100, 150, 250, 500
Overload pressure - psi	45, 100, 150, 290, 450, 725, 1500
Burst pressure - psi	70, 150, 250, 400, 650, 1000, 2500
Mechanical connection	G1/4A DIN 3852 male *(standard for bar ranges only)* 1/4”-18 NPT male *(standard for psi ranges only)* otherconnections upon request
Tightening torque	G1/4: 15 lb-ft (20 Nm) 1/4” NPT: 30 lb-ft (40 Nm)
Parts in contact with media	Ceramic, FPM or EPDM seal, Stainless Steel
Accuracy (B.F.S.L.) including linearity, hysteresis, and repeatability	≤ ±0.5% BFSL
Temperature compensation zero point	≤ ±0.012%/°F typ. ≤ ±0.017%/°F max.
Temperature compensation over range	≤ ±0.012%/°F typ. ≤ ±0.017%/°F max.
Rise time	≤ 1 ms
Long-term drift	≤ ±0.3% FS typ./year
Life expectancy	10 million load cycles (0 to 100% FS)
Weight	Approximately 150 g
Output signal	4 to 20 mA, 2 wire, R_{Lmax} = (UB - 10V) / 20 mA [kΩ]
Environmental Condition	
Compensated temperature range	32° to 176°F (0° to 80°C)
Operating temperature range	-13° to 185°F (-25° to 85°C)
Storage temperature range	-22° to 212°F (-30° to 100°C)
Media temperature range	-13° to 212°F (-25° to 100°C)
CE mark	EN 61000-6-1 / 2 / 3 / 4
Vibration resistance to DIN EN 60068-2-6 at 10 to 500 Hz	≤ 20g
Environmental protection	IP 65 *(DIN 43650 connectors)* IP 67 *(ZBE 06 molded cable)*
Electrical Specifications	
Supply voltage, 2-wire	10 to 30 VDC
Residual ripple suppy voltage	≤ 5%
Reverse polarity protection of the supply voltage, excess voltage, override and short circuit protection	Standard

Model Code

HDA 4 3 X X - X - XXXX - S00 X1 (PSI)

Mechanical Connection*
4 = G1/4A DIN 3852 male *(bar ranges only)*
8 = 1/4"-18 NPT *(psi ranges only)*

Electrical Connection*
5 = DIN 43650 / ISO plug, 3 pole + ground *(connector ZBE 01 included)*
6 = M12x1 plug, 4 pole *(connector not included)*

Output Signal
A = 4-20mA, 2-wire

Pressure Range
For HDA 438X only *(1/4"-18 NPT)*
0015, 0030, 0050, 0100, 0150, 0250, 0500 psi

Modification Number
S00 = with Shipbuilding approvals

Seal Material
F1 = FPM Seal *(hydraulic oil)*
E1 = EPDM Seal *(coolant, ammonia, water)*

(psi)
psi version *(leave blank for bar version)*

**Other options available upon request*

Pin Connections

DIN 43650

Pin	HDA 43X5-A
1	Signal +
2	Signal -
3	nc
4	PE

M12x1

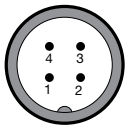

Pin	HDA 43X6-A
1	Signal +
2	nc
3	Signal -
4	nc

Circuit Diagram

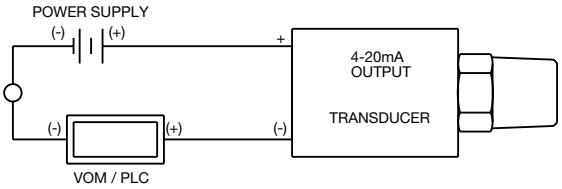

Dimensions

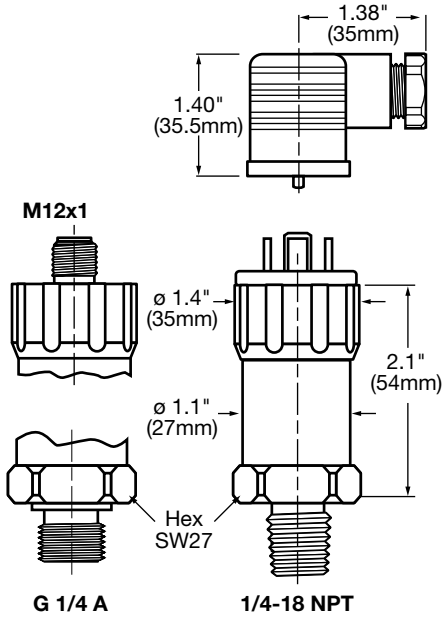

HDA 4400 Series

High Pressure Transducer, Medium Accuracy Shipbuilding & Offshore

Applications

Description

This pressure transmitter has been specially developed for the shipbuilding industry and is based on the HDA 4000 series.

With its stainless steel measurement cell and thin-film strain gauge, the HDA 4400 is designed to measure relative pressures in the high pressure range. The evaluation electronics converts the measured pressure into a proportional analog signal of 4 to 20 mA.

The electronic module is completely potted to protect it against humidity, vibrations and shock, and is enclosed in a solid stainless steel housing.

For use in the shipping industry, these pressure transmitters have been approved by the following organisations.

Approvals

CE mark is a mandatory conformity mark on many products placed on the single market in the European Economic Area

American Bureau of Shipping

German Lloyd - GL

Bureau Veritas

Lloyds Register of Shipping - LRS

Det Norske Veritas - DNV

Technical Details

Sensor Specifications	
Measuring ranges - psi	150, 500, 750, 1000, 1500, 3000, 6000, 9000
Overload pressure - psi	290, 1160, 1160, 2900, 2900, 7250, 11600, 14500
Burst pressure - psi	1450, 2900, 2900, 7250, 7250, 14500, 29000, 29000
Mechanical connection	G1/4A DIN 3852 male *(standard for bar ranges only)* SAE 6 9/16-18 UNF 2A *(standard for psi ranges only)* other connections upon request
Tightening torque	15 lb-ft (20 Nm)
Parts in contact with media	Stainless Steel, FPM seal
Accuracy (B.F.S.L.) including linearity, hysteresis, and repeatability	≤ ±0.5% BFSL
Temperature compensation zero point	≤ ±0.0085%/°F typ. ≤ ±0.014%/°F max.
Temperature compensation over range	≤ ±0.0085%/°F typ. ≤ ±0.014%/°F max.
Rise time	≤ 1 ms
Long-term drift	≤ ±0.3% FS typ./year
Life expectancy	10 million load cycles (0 to 100% FS)
Weight	Approximately 150 g
Output signal	4 to 20 mA, 2 wire, R_{Lmax} = (UB - 10V) / 20 mA [kΩ]
Environmental Condition	
Compensated temperature range	-13° to 185°F (-25° to 85°C)
Operating temperature range	-13° to 185°F (-25° to 85°C)
Storage temperature range	-40° to 212°F (-40° to 100°C)
Media temperature range	-13° to 212°F (-25° to 100°C)
CE mark	EN 61000-6-1 / 2 / 3 / 4
Vibration resistance to DIN EN 60068-2-6 at 10 to 500 Hz	≤ 20g
Environmental protection	IP 65 *(DIN 43650 connectors)* IP 67 *(ZBE 06 molded cable)*
Electrical Specifications	
Supply voltage, 2-conductor	10 to 30 VDC
Residual ripple suppy voltage	≤ 5%
Reverse polarity protection of the supply voltage, excess voltage, override and short circuit protection	Standard

Model Code

HDA 4 4 X X - X - XXXX - S00 (PSI)

Mechanical Connection*
- 4 = G1/4A DIN 3852 male *(bar ranges only)*
- 7 = SAE 6 9/16-18 UNF2A *(psi ranges only)*

Electrical Connection*
- 5 = DIN 43650 / ISO plug, 3 pole + ground *(connector ZBE 01 included)*
- 6 = M12x1 plug, 4 pole *(connector not included)*

Output Signal
- A = 4-20mA, 2-wire

Pressure Range
For HDA 447X only *(SAE 6 9/16-18 UNF2A)*
0150, 0500, 0750, 1000, 1500, 3000, 5000, 6000, 9000 psi

Modification Number
- S00 = with Shipbuilding approvals

(psi)
psi version *(leave blank for bar version)*

**Other options available upon request*

Pin Connections

DIN 43650

Pin	HDA 44X5-A
1	Signal +
2	Signal -
3	nc
4	PE

M12x1

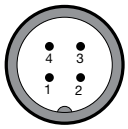

Pin	HDA 44X6-A
1	Signal +
2	nc
3	Signal -
4	nc

Circuit Diagram

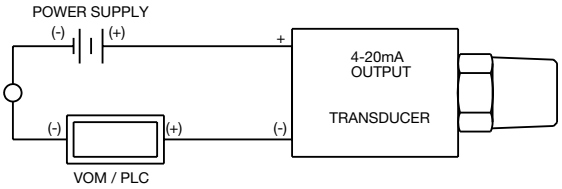

Dimensions

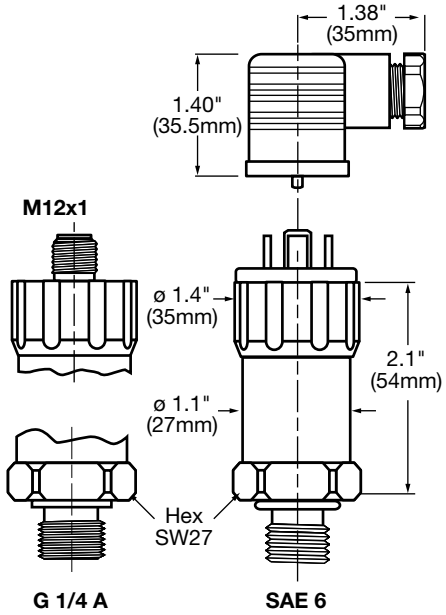

HDA 4700 Series

High Pressure Transducer, High Accuracy Shipbuilding & Offshore

Applications

Description

This pressure transmitter has been specially developed for the shipbuilding industry and is based on the HDA 4000 series.

With its stainless steel measurement cell and thin-film strain gauge, the HDA 4400 is designed to measure relative pressures in the high pressure range. The evaluation electronics converts the measured pressure into a proportional analog signal of 4 to 20 mA.

The electronic module is completely potted to protect it against humidity, vibrations and shock, and is enclosed in a solid stainless steel housing.

For use in the shipping industry, these pressure transmitters have been approved by the following organisations.

Approvals

CE mark is a mandatory conformity mark on many products placed on the single market in the European Economic Area

American Bureau of Shipping

German Lloyd - GL

Bureau Veritas

Lloyds Register of Shipping - LRS

Det Norske Veritas - DNV

Technical Details

Sensor Specifications	
Measuring ranges - psi	150, 500, 750, 1000, 1500, 3000, 6000, 9000
Overload pressure - psi	290, 1160, 1160, 2900, 2900, 7250, 11600, 14500
Burst pressure - psi	1450, 2900, 2900, 7250, 7250, 14500, 29000, 29000
Mechanical connection	G1/4A DIN 3852 male *(standard for bar ranges only)* SAE 6 9/16-18 UNF 2A *(standard for psi ranges only)*
Tightening torque	15 lb-ft (20 Nm)
Parts in contact with media	Stainless Steel
Accuracy (B.F.S.L.) including linearity, hysteresis, and repeatability	≤ ±0.25% BFSL
Temperature compensation zero point	≤ ±0.0045%/°F typ. ≤ ±0.0085%/°F max.
Temperature compensation over range	≤ ±0.0045%/°F typ. ≤ ±0.0085%/°F max.
Rise time	≤ 1 ms
Long-term drift	≤ ±0.1% FS typ./year
Life expectancy	10 million load cycles (0 to 100% FS)
Weight	Approximately 150 g
Output signal	4 to 20 mA, 2 wire, R_{Lmax} = (UB - 10V) / 20 mA [kΩ]
Environmental Condition	
Compensated temperature range	-13° to 185°F (-25° to 85°C)
Operating temperature range	-13° to 185°F (-25° to 85°C)
Storage temperature range	-40° to 212°F (-40° to 100°C)
Media temperature range	-13° to 212°F (-25° to 100°C
CE mark	EN 61000-6-1 / 2 / 3 / 4
Vibration resistance to DIN EN 60068-2-6 at 10 to 500 Hz	≤ 20g
Environmental protection	IP 65 *(DIN 43650 connectors)* IP 67 *(ZBE 06 molded cable)*
Electrical Specifications	
Supply voltage, 2-wire	10 to 30 VDC
Residual ripple suppy voltage	≤ 5%
Reverse polarity protection of the supply voltage, excess voltage, override and short circuit protection	Standard

Model Code

HDA 4 7 X X - X - XXXX - S00 (PSI)

Mechanical Connection*
4 = G1/4A DIN 3852 male *(bar ranges only)*
7 = SAE 6 9/16-18 UNF2A *(psi ranges only)*

Electrical Connection*
5 = DIN 43650 / ISO plug, 3 pole + ground
(connector ZBE 01 included)
6 = M12x1 plug, 4 pole *(connector not included)*

Output Signal
A = 4-20mA, 2-wire

Pressure Range
For HDA 477X only *(SAE 6 9/16-18 UNF2A)*
0150, 0500, 0750, 1000, 1500, 3000, 5000, 6000, 9000 psi

Modification Number
S00 = with Shipbulding approvals

(psi)
psi version *(leave blank for bar version)*

**Other options available upon request*

Pin Connections

DIN 43650

Pin	HDA 47X5-A
1	Signal +
2	Signal -
3	nc
4	PE

M12x1

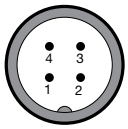

Pin	HDA 47X6-A
1	Signal +
2	nc
3	Signal -
4	nc

Circuit Diagram

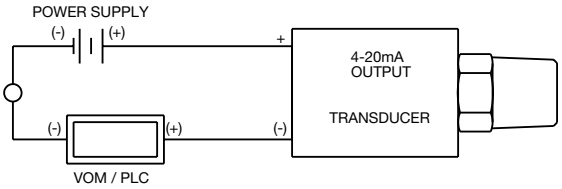

Dimensions

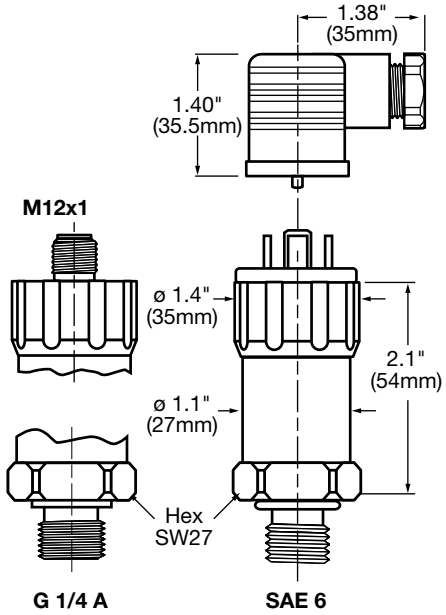

HDA 7400 Series

Compact Pressure Transducer

Applications

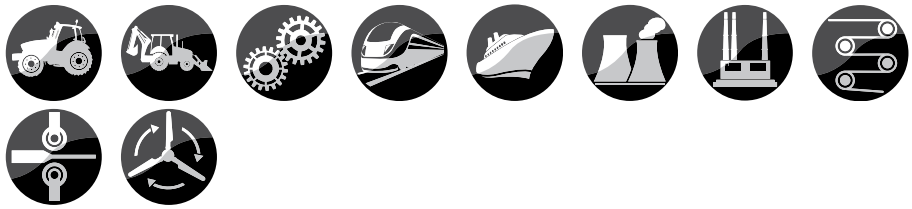

Description

The pressure transmitter series HDA 7000 combines excellent technical specifications with a very compact design.

The HDA 7400 was specifically developed for OEM applications e.g. in mobile applications. A stainless steel sensor cell with thin-film strain gauge is the basis of a robust, longlife pressure transmitter.

Various pressure ranges between 0 to 500 psi and 0 to 9000 psi provide versatility when adapting to particular applications.

For integration into modern controls *(e.g. with PLC)* standard analog output signals are available.

Special Features

- Accuracy ≤ ±0.5% BFSL
- Highly robust sensor cell
- Highly compact design
- Very small temperature error
- Excellent EMC characteristics
- Excellent long-term characteristics

Approvals

CE mark is a mandatory conformity mark on many products placed on the single market in the European Economic Area

Technical Details

Sensor Specifcations	
Measuring ranges - psi	300, 500, 750, 1000, 1500, 3000, 6000, 9000
Overload pressure - psi	1160, 1160, 1160, 2900, 2900, 7250, 11600, 14500
Burst pressure - psi	2900, 2900, 2900, 7250, 7250, 14500, 29000, 29000
Mechanical connection	G1/4A DIN 3852 male *(standard for bar ranges only)* SAE 6 9/16-18 UNF 2A *(standard for psi ranges only)*
Tightening torque	15 lb-ft (20 Nm)
Parts in contact with media	Stainless Steel; FPM seal
Accuracy (B.F.S.L.) including linearity, hysteresis, and repeatability	≤ ±0.5% BFSL
Temperature compensation zero point	≤ ±0.0085% FS/°F typ. ≤ ±0.017% FS/°F max.
Temperature compensation over range	≤ ±0.0085% FS/°F typ. ≤ ±0.017% FS/°F max.
Rise time	≤ 2 ms
Long-term drift	≤ ±0.3% FS typ./year
Life expectancy	10 million load cycles (0 to 100% FS)
Weight	Approximately 60 g
Output signal	4 to 20 mA, 2 wire, R_{Lmax} = (UB - 10V) / 20 mA [kΩ] 0 to 10 V, 3 wire, R_{Lmin} = 2 kΩ
Environmental Condition	
Compensated temperature range	-32° to 158°F (0° to 70°C)
Operating temperature range	-13° to 185°F (-25° to 85°C)
Storage temperature range	-40° to 212°F (-40° to 100°C)
Media temperature range	-40° to 212°F (-40° to 100°C)
CE mark	EN 61000-6-1 / 2 / 3 / 4
Vibration resistance to DIN EN 60068-2-6 at 10 to 500 Hz	≤ 20g
Environmental protection	IP 67 *(ZBE 06 molded cable or integrated open ended cable)*
Electrical Specifications	
Supply voltage, 2-wire	10 to 30 VDC
Supply voltage, 3-wire	12 to 30 VDC
Residual ripple suppy voltage	≤ 5%
Max supply current, 3-wire	approximately 25 mA
Reverse polarity protection of the supply voltage, excess voltage, override and short circuit protection	Standard

Model Code

HDA 7 4 X X - X - XXXX - 000 (PSI)

Mechanical Connection*
4 = G1/4A DIN 3852 male *(bar ranges only)*
7 = SAE 6 9/16-18 UNF2A *(psi ranges only)*

Electrical Connection*
6 = M12x1 plug, 4 pole *(connector not included)*
Cable version available upon request

Output Signal*
A = 4-20mA, 2-wire
B = 0-10VDC, 3-wire

Pressure Range
For HDA 7476 only *(SAE 6 9/16-18 UNF2A)*
0300, 0500, 0750, 1000, 1500, 3000, 5000, 6000, 9000 psi

Modification Number
000 = Standard

(psi)
psi version *(leave blank for bar version)*

**Other options available upon request*

Pin Connections

M12x1

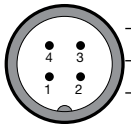

Pin	7446-A	7446-B
1	Signal +	$+U_B$
2	nc	nc
3	Signal -	0 V
4	nc	Signal

Circuit Diagram

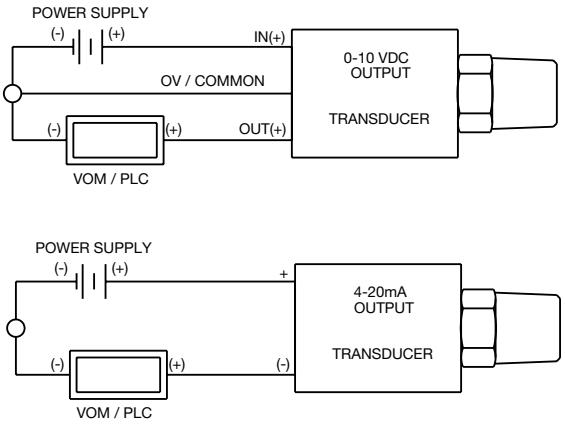

Dimensions

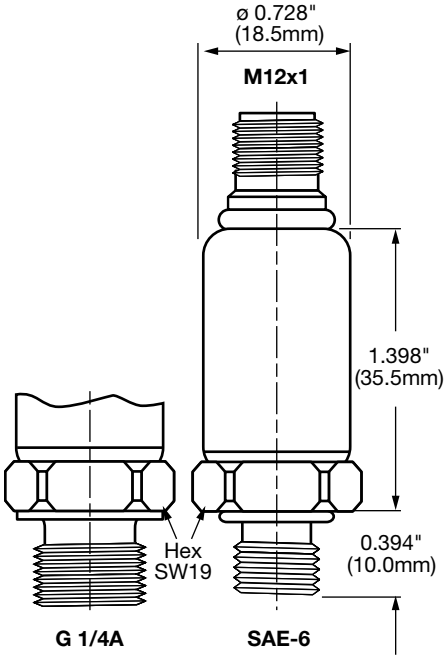

HDA 3800 Series

Pressure Transducer, Very High Accuracy

Applications

Description

The pressure transmitter series HDA 3800 has a very accurate and robust sensor cell with a thin-film strain gauge on a stainless steel membrane.

Outstanding technical specifications and robust construction make the HDA 3800 particularly suited to the field of test rig and diagnostic technology. It is also suitable for a broad range of applications in industry.

Since the accuracy of a pressure transmitter varies greatly with the temperature of the fluid, the unit offers outstanding characteristics on precisely this point. The output signals 4 to 20 mA, 0 to 10 V and 0 to 20 mA (rising) are available as standard.

Special Features

- Accuracy ≤ ±0.15 % BFSL
- Highly robust sensor cell
- Very small temperature error
- Excellent EMC characteristics
- Excellent long term stability

Approvals

CE mark is a mandatory conformity mark on many products placed on the single market in the European Economic Area

Technical Details

Sensor Specifications	
Measuring ranges - bar	6, 16, 60, 100, 250, 400, 600
Overload pressure - bar	15, 32, 120, 200, 400, 800, 100
Burst pressure - bar	100, 200, 300, 500, 1000, 2000, 2000
Mechanical connection	G1/4A DIN 3852 male
Tightening torque	Approx. 15 lb-ft (20 Nm)
Parts in contact with media	Stainless steel, FPM seal
Accuracy (B.F.S.L.) including linearity, hysteresis, and repeatability	≤ ±0.15% BFSL
Temperature compensation zero point	≤ ±0.003% / °F typ. ≤ ±0.006% / °F max.
Temperature compensation over range	≤ ±0.003% / °F typ. ≤ ±0.006% / °F max.
Rise time	≤ 0.5 ms
Long-term drift	≤ ±0.1% FS typ. / year
Life expectancy	10 million load cycles (0 to 100% FS)
Weight	Approximately 180 g
Output signal	4 to 20 mA, 2 wire, $R_{Lmax} = (U_B - 10V) / 20 mA [k\Omega]$ 0 to 10 VDC, 3 wire, $R_{Lmin} = 2 k\Omega$ 0 to 20 mA, 3 wire, $R_{Lmin} = (U_B - 7V) / 20 mA [k\Omega]$
Environmental Condition	
Compensated temperature range	-13° to 185°F (-25° to 85°C)
Operating temperature range	-40° to 185°F (-40° to 85°C)
Storage temperature range	-40° to 212°F (-40° to 100°C)
Media temperature range	-40° to 212°F (-40° to 100°C)
CE mark	EN 61000-6-1 / 2 / 3 / 4
Vibration resistance to DIN EN 60068-2-6 at 10 to 500 Hz	≤ 20g
Environmental protection	IP 65
Electrical Specifications	
Supply voltage	2-wire: 10 to 30 VDC 3-wire: 12 to 30 VDC
Residual ripple suppy voltage	≤ 5%
Max supply current, 3-wire	approximately 15 mA
Reverse polarity protection of the supply voltage, excess voltage, override and short circuit protection	Standard

Model Code

HDA 3 8 4 X - X - XXXX - 000

Mechanical Connection
4 = G1/4A DIN 3852 male
(SAE 6 available with adapter)

Electrical Connection*
4 = 4 pole plug M18x1, Binder Series *(connector not included)*
5 = DIN 43650 / ISO plug, 3 pole + ground
(connector ZBE 01 included)

Output Signal*
A = 2 conductor, 4 to 20 mA
B = 3 conductor, 0 to 10 VDC
E = 3 conductor, 0 to 20 mA sourcing

Pressure Range
For HDA 387X only *(G1/4A DIN 3852)*
006, 016, 060, 100, 250, 400, 600 bar *(8.7, 232, 870, 1450, 3625, 5800, 8700 psi)*

Modification Number
000 = Standard

**Other options available upon request*

Pin Connections

DIN 43650

Pin	3845-A	3845-B / E
1	Signal +	$+U_B$
2	Signal -	0 V
3	nc	Signal
4	PE	PE

Binder 714 M18

Pin	3844-A	3844-B / E
1	nc	$+U_B$
2	Signal +	Signal
3	Signal -	0 V
4	nc	nc

Circuit Diagram

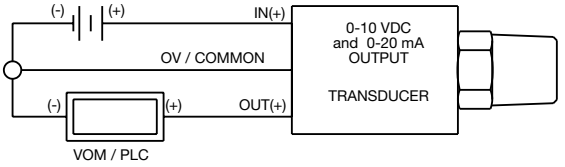

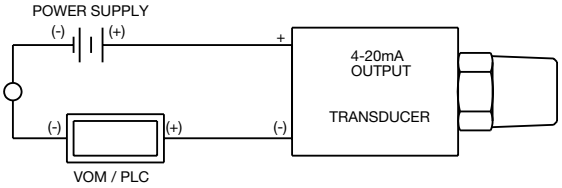

Dimensions

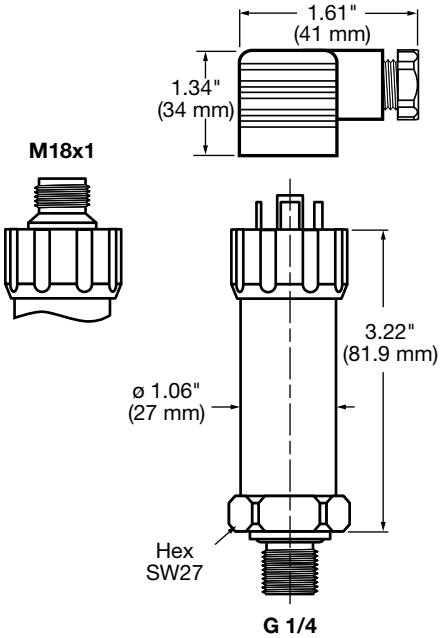

Adapter
G 1/4" (F) to SAE 6 (M)
Part #02055566

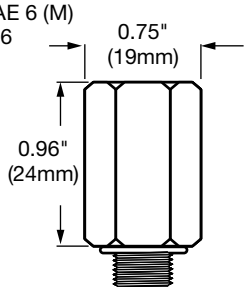

HDA 3800 Series

Pressure Transducer, Very High Accuracy Steel Works

Applications

Description

This high-precision pressure transmitter has been specially developed and adapted for the sophisticated measurement demands of steelworks technology.

The unit has a very robust sensor cell with a thin-film strain gauge on a stainless steel membrane.

Its outstanding specifications in respect of temperature effect (temperature drift for zero point and range are in each case max. ≤ ±0.01% FS/°C) and accuracy (≤ ±0.15% BFSL) make it ideally suited for use in the ambient conditions found in steelworks.

The excellent EMC characteristics guarantee signal stability during the harshest high-frequency, electro-magnetic interference.

Special Features

- Accuracy ≤ ±0.15% BFSL
- Specially designed for use in steelworks
- Highly robust sensor cell
- Very small temperature error
- Excellent EMC characteristics
- Excellent long term stability

Approvals

CE mark is a mandatory conformity mark on many products placed on the single market in the European Economic Area

Technical Details

Sensor Specifications	
Measuring ranges - psi	150, 500, 750, 1000, 1500, 3000, 6000, 9000
Overload pressure - psi	290, 1160, 1160, 2900, 2900, 7250, 11600, 14500
Burst pressure - psi	1450, 2900, 2900, 7250, 7250, 14500, 29000, 29000
Mechanical connection	G 1/4 A DIN 3852 *(bar ranges only)* G 1/2 A DIN 3852 *(bar ranges only)* SAE 6 9/16-18 UNF 2A male *(psi ranges only)*
Tightening torque	G 1/4 A DIN 3852: 15 lb-ft (20 Nm) G 1/2 A DIN 3852: 33 lb-ft (45 Nm) SAE 6 9/16-18 UNF 2A male: 15 lb-ft (20 Nm)
Parts in contact with media	Stainless Steel, Viton seal (G 1/4 A) Stainless Steel, NBR O-ring (G 1/2 A)
Accuracy (B.F.S.L.) including linearity, hysteresis, and repeatability	≤ ± 0.15% BFSL
Temperature compensation zero point	≤ ±0.003%/°F typ. ≤ ±0.006%/°F max.
Temperature compensation over range	≤ ±0.003%/°F typ. ≤ ±0.006%/°F max.
Rise time	≤ 0.5 ms
Long-term drift	≤ ±0.1% FS typ. / year
Life expectancy	10 million load cycles (0 to 100% FS)
Weight	Approximately 210 g
Output signal	4 to 20 mA, 2 wire, R_{Lmax} = (UB - 10V) / 20 mA [kΩ] 0 to 20 mA, 3 wire, R_{Lmin} = (U_B - 7V) / 20 mA [kΩ]
Environmental Condition	
Compensated temperature range	-13° to 185°F (-25° to 85°C)
Operating temperature range	-40° to 185°F (-40° to 85°C)
Storage temperature range	-40° to 212°F (-40° to 100°C)
Media temperature range	-40° to 212°F (-40° to 100°C)
CE mark	EN 61000-6-1 / 2 / 3 / 4
Vibration resistance to DIN EN 60068-2-6 at 10 to 500 Hz	≤ 25g
Environmental protection	IP 68
Electrical Specifications	
Supply voltage, 2-wire	10 to 30 VDC
Residual ripple suppy voltage	≤ 5%
Max supply current, 3-wire	approximately 25 mA
Electrical connection	PG gland with open ended cable, silicon-free
Reverse polarity protection of the supply voltage, excess voltage, override and short circuit protection	Standard

Model Code

HDA 3 8 X X - X - XXXX - 124 (PSI) XXM

Mechanical Connection
0 = G1/2 A male thread *(bar ranges only)*
4 = G1/4A DIN 3852 male *(bar ranges only)*
7 = SAE 6 9/16-18 UNF2A *(psi ranges only)*

Electrical Connection
0 = Open ended cable *(Teflon cable, silicone free)* with cable gland

Output Signal
A = 4-20mA, 2-wire
E = 0-20mA, 3-wire

Pressure Range
For HDA 387X *(SAE 6 9/16-18 UNF2A only)*
0150, 0500, 0750, 1000, 1500, 3000, 6000, 9000 psi

Modification Number
124 = Standard

(psi)
psi version *(leave blank for bar version)*

Cable Length
06M = 6 meters
10M = 10 meters
15M = 15 meters
25M = 25 meters
30M = 30 meters

Pin Connections

Wire	HDA 38x0-A	HDA 38x0-E
black	nc	$+U_B$
brown	Signal +	Signal
blue	Signal -	0 V
green / yellow	nc	nc

Circuit Diagram

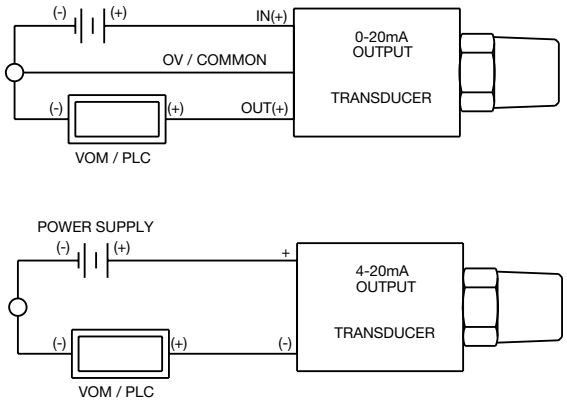

Dimensions

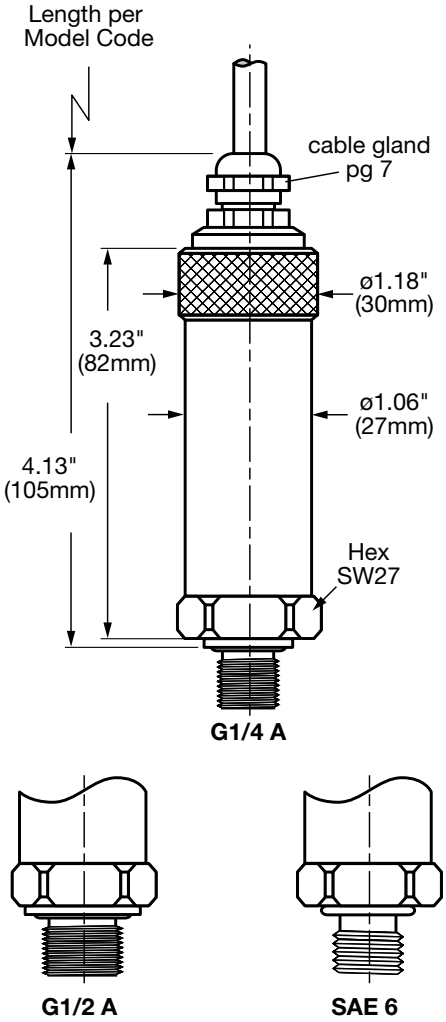

EDS 3100 Series

Absolute Pressure Electronic Switch

Applications

Description

The EDS 3100 is a compact electronic pressure switch with digital display for absolute pressure measurement in the low pressure range. It has a ceramic measuring cell with thick-film strain gauges. The unit can have one or two switching outputs, and there is the option of an additional analog output signal (4 to 20 mA or 0 to 10 V).

A special feature of the EDS 3100 is that the display can be moved in 2 planes. The unit can be installed in almost any mounting position and the display can be turned to the optimum position without the additional expense of a mechanical adapter. The 4-digit digital display can indicate the pressure in bar, psi or MPa. The user can choose between the individual measurement units.

When changing to a different measurement unit, the EDS 3100 automatically converts all the switching settings to the new unit of measurement. In addition, the EDS 3100 is also available in a DESINA® version.

The main applications of the EDS 3100 are primarily in hydraulics, pneumatics and in refrigeration and air conditioning technology.

Special Features

- 1 or 2 PNP transistor switching outputs, up to 1.2 A load per output
- Accuracy ≤ ±0.5% BFSL
- Optional analog output selectable (4 to 20 mA / 0 to 10 V)
- 4-digit digital display
- Optimum alignment - can be rotated in two planes (axes)
- Measured value can be displayed in bar, psi or MPa
- User-friendly due to key programming
- Set point and reset point can be adjusted independently
- Many useful additional functions
- Option of Desina® version with diagnostic function

Approvals

CE mark is a mandatory conformity mark on many products placed on the single market in the European Economic Area

Technical Details

Sensor Specifications	
Measuring ranges - psi	15, 50
Overload pressure - psi	45, 150
Burst pressure - psi	70, 250
Mechanical connection	G1/4A DIN 3852 male *(standard for bar ranges only)* 1/4"-18 NPT male *(standard for psi ranges only)*
Tightening torque	G1/4: 15 lb-ft (20 Nm) 1/4" NPT: 30 lb-ft (40 Nm)
Parts in contact with media	Stainless steel, ceramic, FPM seal
Accuracy (B.F.S.L.) including linearity, hysteresis, and repeatability	≤ ±0.5% BFSL
Temperature compensation zero point	≤ ±0.0085%/°F typ. ≤ ±0.017%/°F max.
Temperature compensation over range	≤ ±0.0085%/°F typ. ≤ ±0.017%/°F max.
Long-term drift	≤ ±0.3% FS typ. / year
Life expectancy	10 million load cycles (0 to 100% FS)
Weight	Approximately 120 g
Output signal	4 to 20 mA, R_{Lmax} = 500 Ω 0 to 10 VDC, R_{Lmin} = 1 kΩ
Switching Specifications	
Type	PNP transistor output
Repeatability	≤ ±0.25% FS max.
Switching current	Max. 1.2 A per switching output
Switching cycles	≥ 100 million
Reaction time	< 10 ms
Environmental Conditions	
Compensated temperature range	14° to 158°F (-10° to 70°C) 14° to 140°F (-10 to 60°C) with UL rating
Operating temperature range	-13° to 176°F (-25° to 80°C) -13° to 140°F (-25° to 60°C) with UL rating
Storage temperature range	-40° to 176°F (-40° to 80°C)
Media temperature range	-13° to 176°F (-25° to 80°C)
CE mark	EN 61000-6-1 / 2 / 3 / 4
c UL us mark *(Environmental conditions to 1.4.2 UL 61010-1; C22.2 No. 61010-1)*	Certificate no. E318391
Vibration resistance to DIN EN 60068-2-6 at 10 to 500 Hz	≤ 10g
Environmental protection	IP 67 *(molded M12x1 connector is used)*
Electrical Specifications	
Supply voltage -limited energy- *according to:*	9 to 35 VDC without analog output 18 to 35 VDC with analog output *9.3 UL 61010; Class 2; UL 1310/1585; LPS UL 60950*
Residual ripple suppy voltage	≤ 5%
Current consumption	max. 2.455 A total max. 35 mA with inactive switching outputs max. 55 mA with analog output and inactive switching outputs
Reverse polarity protection of the supply voltage, excess voltage, override and short circuit protection	Standard

Model Code

EDS 3 1 X X - X - XXXX - 400 - X1

Mechanical Connection*
- 4 = G1/4A DIN 3852 male *(bar ranges only)*
- 8 = 1/4"-18 NPT *(psi ranges only)*

Electrical Connection*
- 6 = M12x1 plug, 4 pole *(connector not included)*
- 8 = M12x1 plug, 5 pole *(connector not included)*

Output
- 1 = 1 Switching Output *(only with electrical connection 6)*
- 2 = 2 Switching Outputs *(only with electrical connection 6)*
- 3 = 1 Switching Output with 1 analog output *(only with electrical connection 6)*
- 5 = 2 Switching Outputs with 1 analog output *(only with electrical connection 8)*

Pressure Range
For EDS 318X only *(1/4"-18 NPT)*
0015, 0050 psi

Modification Number
400 = Standard in psi

Seal Material
- F1 = FPM Seal *(hydraulic oil)*
- E1 = EPDM Seal *(coolant, ammonia, water)*

**Other options available upon request*

Pin Connections

M12x1, 4 pole

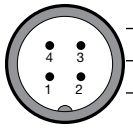

Pin	31X6-1	31X6-2	31X6-3
1	$+U_B$	$+U_B$	$+U_B$
2	nc	SP 2	analog
3	0 V	0 V	0 V
4	SP 1	SP 1	SP 1

M12x1, 5 pole

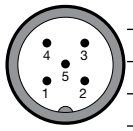

Pin	31X8-5
1	$+U_B$
2	analog
3	0 V
4	SP 1
5	SP 2

Circuit Diagram

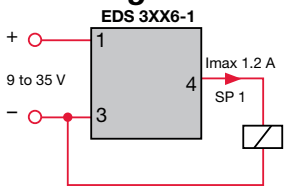

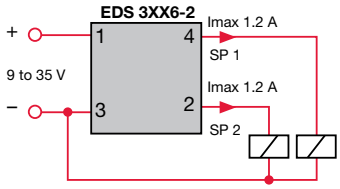

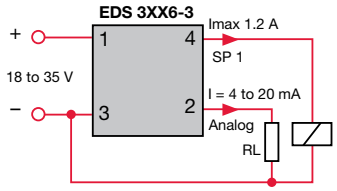

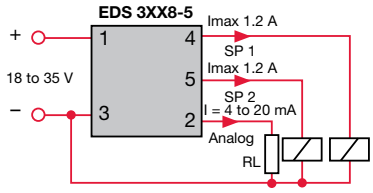

Dimensions

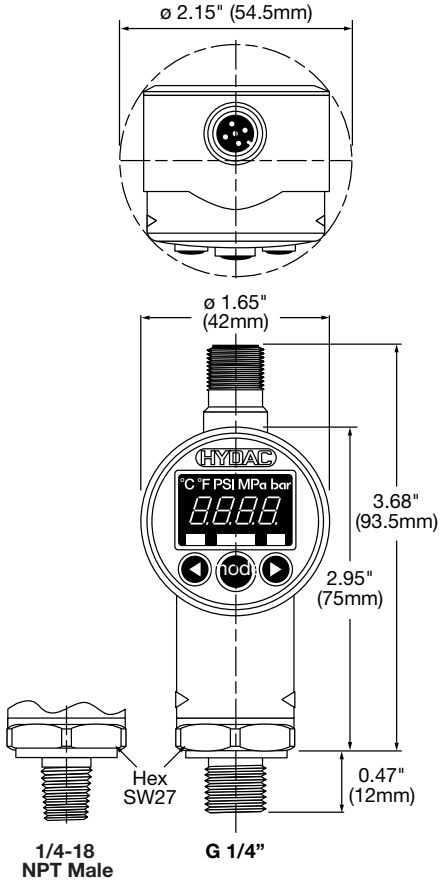

EDS 3300 Series

Low Pressure Electronic Switch

Applications

Description

The EDS 3300 is a compact electronic pressure switch with digital display for measuring relative pressure in the low pressure range. It has a ceramic measuring cell with thick-film strain gauges. The unit can have one or two switching outputs, and there is the option of an additional analog output signal *(4 to 20 mA or 0 to 10 V selectable)*.

A special feature of the EDS 3300 is that the display can be moved in 2 planes. The unit can be installed in almost any mounting position and the display can be turned to the optimum position without the additional expense of a mechanical adapter.

The 4-digit digital display can indicate the pressure in bar, psi or MPa. The user can choose among the individual measurement units. When changing to a different measurement unit, the EDS 3300 automatically converts all the switching settings to the new unit of measurement.

In addition, the EDS 3300 is also available in a DESINA® version. The main applications of the EDS 3300 are primarily in hydraulics, pneumatics and in refrigeration and air conditioning technology.

Special Features

- 1 or 2 PNP transistor switching outputs, up to 1.2 A load per output
- Accuracy ≤ ±0.5% BFSL
- Optional analogue output selectable (4 to 20 mA / 0 to 10 V)
- 4-digit digital display
- Optimum alignment - can be rotated in two planes (axes)
- Measured value can be displayed in bar, psi or MPa
- User-friendly due to key programming
- Switching points and switch-back hystereses can be adjusted independently
- Many useful additional functions

Approvals

CE mark is a mandatory conformity mark on many products placed on the single market in the European Economic Area

Technical Details

Sensor Specifications	
Measuring ranges - psi	-14.5 to 75, 15, 30, 50, 150, 250, 500
Overload pressure - psi	290, 45, 100, 150, 450, 725, 1500
Burst pressure - psi	400, 70, 150, 250, 650, 1000, 2500
Mechanical connection	G1/4A DIN 3852 male *(standard for bar ranges only)* 1/4"-18 NPT male *(standard for psi ranges only)*
Tightening torque	G1/4: 15 lb-ft (20 Nm) 1/4" NPT: 30 lb-ft (40 Nm)
Parts in contact with media	Stainless steel, ceramic, FPM seal
Accuracy (B.F.S.L.) including linearity, hysteresis, and repeatability	≤ ±0.5% BFSL
Temperature compensation zero point	≤ ±0.0085% / °F typ. ≤ ±0.017% / °F max.
Temperature compensation over range	≤ ± 0.0085% / °F typ. ≤ ±0.017% / °F max.
Long-term drift	≤ ± 0.3% FS typ. / year
Life expectancy	10 million load cycles (0 to 100% FS)
Weight	Approximately 120 g
Output signal	4 to 20 mA, $R_{L\,max}$ = 500 Ω 0 to 10 VDC, $R_{L\,min}$ = 1 kΩ
Switching Specifications	
Type	PNP transistor output
Repeatability	≤ ±0.25% FS max.
Switching current	Max. 1.2 A per switching output
Switching cycles	≥ 100 million
Reaction time	< 10 ms
Environmental Condition	
Compensated temperature range	14° to 158°F (-10° to 70°C) 14° to 140°F (-10 to 60°C) with UL rating
Operating temperature range	-13° to 176°F (-25° to 80°C) -13° to 140°F (-25° to 60°C) with UL rating
Storage temperature range	-40° to 176°F (-40° to 80°C)
Media temperature range	-13° to 176°F (-25° to 80°C)
CE mark	EN 61000-6-1 / 2 / 3 / 4
c UL us mark *(Environmental conditions to 1.4.2 UL 61010-1; C22.2 No. 61010-1)*	Certificate no. E318391
Vibration resistance to DIN EN 60068-2-6 at 10 to 500 Hz	≤ 10g
Environmental protection	IP 67 *(molded M12x1 connector is used)*
Electrical Specifications	
Supply voltage -limited energy- *according to:*	9 to 35 VDC without analog output 18 to 35 VDC with analog output *9.3 UL 61010; Class 2; UL 1310/1585; LPS UL 60950*
Residual ripple suppy voltage	≤ 5%
Current consumption	max. 2.455 A total max. 35 mA with inactive switching outputs max. 55 mA with analog output and inactive switching outputs
Reverse polarity protection of the supply voltage, excess voltage, override and short circuit protection	Standard

Model Code

EDS 3 3 X X - X - XXXX - 400 - X1

Mechanical Connection*
- 4 = G1/4A DIN 3852 male *(bar ranges only)*
- 8 = 1/4"-18 NPT *(psi ranges only)*

Electrical Connection*
- 6 = M12x1 plug, 4 pole *(connector not included)*
- 8 = M12x1 plug, 5 pole *(connector not included)*

Output
- 1 = 1 Switching Output *(only with electrical connection 6)*
- 2 = 2 Switching Outputs *(only with electrical connection 6)*
- 3 = 1 Switching Output with 1 analog output *(only with electrical connection 6)*
- 5 = 2 Switching Outputs with 1 analog output *(only with electrical connection 8)*

Pressure Range
For EDS 338X only *(1/4"-18 NPT)*
0089 (-14.5 to 75), 0015, 0030, 0050, 0150, 0250, 0500 psi

Modification Number
400 = Standard in psi

Seal Material
- F1 = FPM Seal *(hydraulic oil)*
- E1 = EPDM Seal *(coolant, ammonia, water)*

**Other options available upon request*

Pin Connections

M12x1, 4 pole

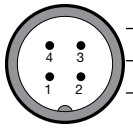

Pin	33X6-1	33X6-2	33X6-3
1	$+U_B$	$+U_B$	$+U_B$
2	nc	SP 2	analog
3	0 V	0 V	0 V
4	SP 1	SP 1	SP 1

M12x1, 5 pole

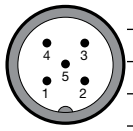

Pin	33X8-5
1	$+U_B$
2	analog
3	0 V
4	SP 1
5	SP 2

Circuit Diagram

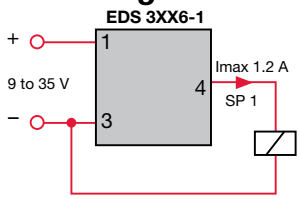

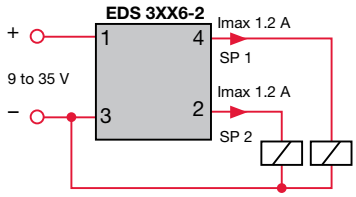

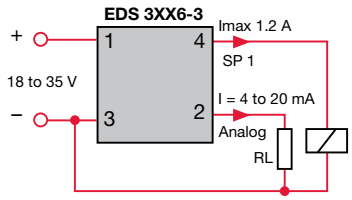

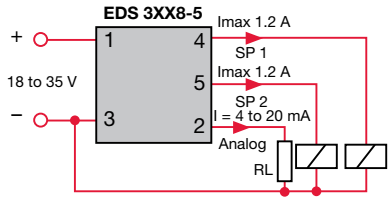

Dimensions

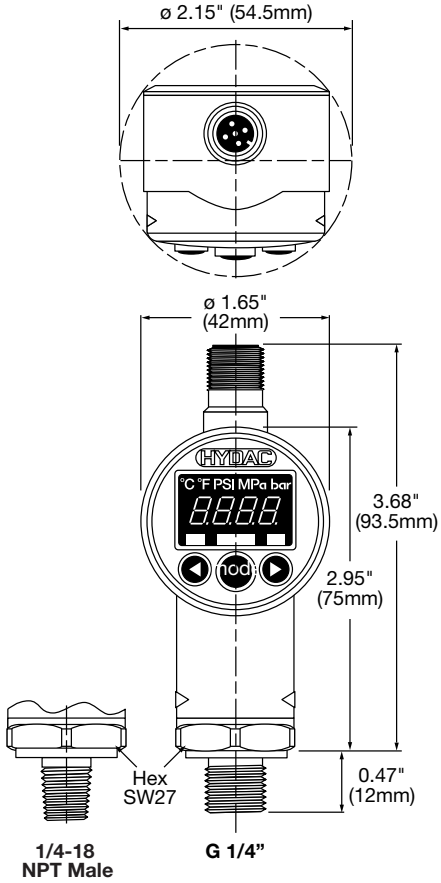

EDS 3400 Series

High Pressure Electronic Switch

Applications

Description

The EDS 3400 is a compact, electronic pressure switch with an integral digital display for measuring relative pressure in the high pressure range.

The unit has a stainless steel measurement cell with thin-film strain gauges. The unit can have one or two switching outputs and there is the option of an additional analog output signal *(4 to 20 mA or 0 to 10 V selectable)*.

A special design feature of the EDS 3400 is that the display can be moved in two planes. The unit can be installed in almost any mounting position and the display can be turned to the optimum position without the usual additional expense of a mechanical adapter. The 4-digit digital display can indicate the pressure in bar, psi or MPa. The user can select the particular measurement unit. When changing to a different unit of measurement, the EDS 3400 converts all the switching settings to the new measurement unit. In addition the EDS 3400 is also available in a DESINA® version.

The main applications of the EDS 3400 are primarily in hydraulics, pneumatics and in refrigeration & air conditioning technology.

Special Features

- 1 or 2 PNP transistor switching outputs, up to 1.2 A load per output
- Accuracy ≤ ±0.5% BFSL
- Optional analog output selectable *(4 to 20 mA / 0 to 10 V)*
- 4-digit digital display
- Optimum alignment - can be rotated in two planes *(axes)*
- Measured value can be displayed in bar, psi or MPa
- User-friendly due to key programming
- Switching points and switch-back hystereses can be adjusted independently
- Many useful additional functions
- Option of Desina® version with diagnostic function

Approvals

CE mark is a mandatory conformity mark on many products placed on the single market in the European Economic Area

Technical Details

Sensor Specifications	
Measuring ranges - psi	1000, 3000, 6000, 9000
Overload pressure - psi	2900, 7250, 11600, 11600
Burst pressure - psi	7250, 14500, 29000, 29000
Mechanical connection	G1/4A DIN 3852 male *(standard for bar ranges only)* SAE 6 9/16-18 UNF 2A *(standard for psi ranges only)*
Tightening torque	15 lb-ft (20 Nm)
Parts in contact with media	Stainless steel, FPM seal
Accuracy (B.F.S.L.) including linearity, hysteresis, and repeatability	≤ ±0.5% BFSL
Temperature compensation zero point	≤ ±0.0085% / °F typ. ≤ ±0.017% / °F max.
Temperature compensation over range	≤ ± 0.0085% / °F typ. ≤ ±0.017% / °F max.
Long-term drift	≤ ± 0.3% FS typ. / year
Life expectancy	10 million load cycles (0 to 100% FS)
Weight	Approximately 120 g
Output signal	4 to 20 mA, $R_{L\,max}$ = 500 Ω 0 to 10 VDC, $R_{L\,min}$ = 1 kΩ
Switching Specifications	
Type	PNP transistor output
Repeatability	≤ ±0.25% FS max.
Switching current	Max. 1.2 A per switching output
Switching cycles	≥ 100 million
Reaction time	< 10 ms
Environmental Condition	
Compensated temperature range	14° to 158°F (-10° to 70°C) 14° to 140°F (-10 to 60°C) with UL rating
Operating temperature range	-13° to 176°F (-25° to 80°C) -13° to 140°F (-25° to 60°C) with UL rating
Storage temperature range	-40° to 176°F (-40° to 80°C)
Media temperature range	-13° to 176°F (-25° to 80°C)
CE mark	EN 61000-6-1 / 2 / 3 / 4
c UL us mark *(Environmental conditions to 1.4.2 UL 61010-1; C22.2 No. 61010-1)*	Certificate no. E318391
Vibration resistance to DIN EN 60068-2-6 at 10 to 500 Hz	≤ 10g
Environmental protection	IP 67 *(molded M12x1 connector is used)*
Electrical Specifications	
Supply voltage -limited energy- *according to:*	9 to 35 VDC without analog output 18 to 35 VDC with analog output *9.3 UL 61010; Class 2; UL 1310/1585; LPS UL 60950*
Residual ripple suppy voltage	≤ 5%
Current consumption	max. 2.455 A total max. 35 mA with inactive switching outputs max. 55 mA with analog output and inactive switching outputs
Reverse polarity protection of the supply voltage, excess voltage, override and short circuit protection	Standard

Model Code

EDS 3 4 X X - X - XXXX - 400

Mechanical Connection*
- 4 = G1/4A DIN 3852 male *(bar ranges only)*
- 7 = SAE 6 9/16-18 UNF 2A *(psi ranges only)*

Electrical Connection*
- 6 = M12x1 plug, 4 pole *(connector not included)*
- 8 = M12x1 plug, 5 pole *(connector not included)*

Output
- 1 = 1 Switching Output *(only with electrical connection 6)*
- 2 = 2 Switching Outputs *(only with electrical connection 6)*
- 3 = 1 Switching Output with 1 analog output *(only with electrical connection 6)*
- 5 = 2 Switching Outputs with 1 analog output *(only with electrical connection 8)*

Pressure Range
For EDS 347X only *(SAE 6 9/16-18 UNF2A)*
1000, 3000, 6000, 9000 psi

Modification Number
400 = Standard in psi

**Other options available upon request*

Pin Connections

M12x1, 4 pole

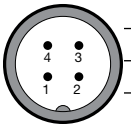

Pin	34X6-1	34X6-2	34X6-3
1	$+U_B$	$+U_B$	$+U_B$
2	nc	SP 2	analog
3	0 V	0 V	0 V
4	SP 1	SP 1	SP 1

M12x1, 5 pole

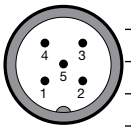

Pin	34X8-5
1	$+U_B$
2	analog
3	0 V
4	SP 1
5	SP 2

Circuit Diagram

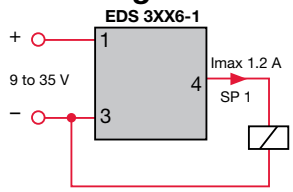

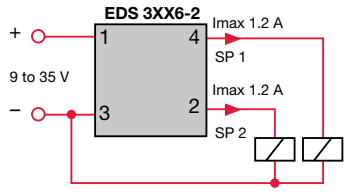

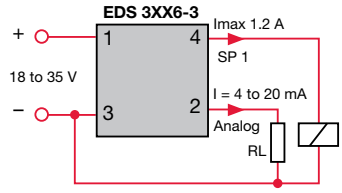

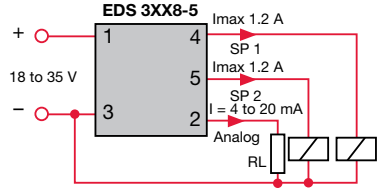

Dimensions

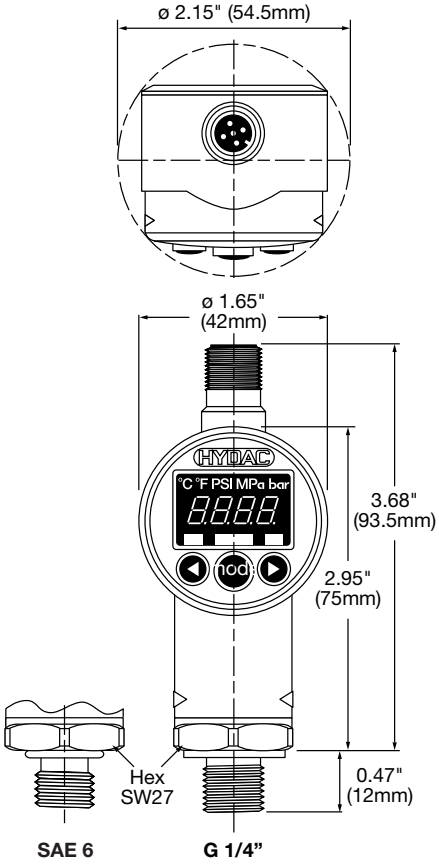

EDS 8000 Series

Electronic Pressure Switch

Applications

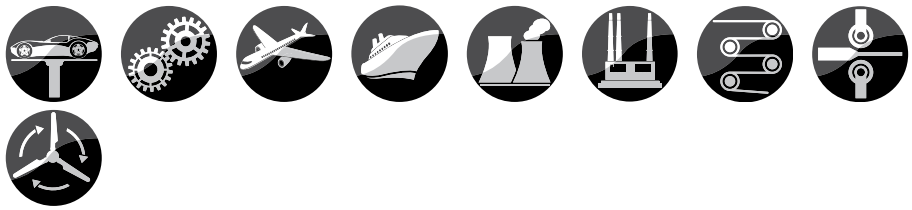

Description

EDS 8000 is a compact, easy to program electronic pressure switch. It is available with two PNP transistor switching outputs.

All settings of the EDS 8000 are programmable via two buttons and a four digit digital display. The switch position is indicated by a red or green backlight LED of the display.

The unit has many additional adjustment parameters, e.g. switching delay times, N/O / N/C function of the outputs, display in PSI, bar and MPa. EDS 8000 is available with pressure ranges from 0-500 up to 0-9000 psi.

The main applications of EDS 8000 are pressure indications in hydraulics and pneumatics; wherever constant switching activities and accuracy are highly in demand.

Additional functions

- Switching mode of the outputs is selectable *(set point function or window function)*
- Switch direction of the outputs selectable (N/C or N/O)
- Set and reset delay adjustable from 0.00 to 99.99 seconds
- Stabilized display during pressure pulsation
- Pressure can be displayed in bar, psi, MPa

Features

- Menu navigation according to VDMA
- 2 PNP transistor outputs
- Rugged stainless steel membrane
- Accuracy class ≤ ±0.5% BFSL
- 4-digit digital display
- Multi-color switch display
- Protection class IP 67
- User-friendly
- Many useful additional functions

Approvals

CE mark is a mandatory conformity mark on many products placed on the single market in the European Economic Area

Technical Details

Input Data	
Measuring ranges - psi	500, 1000, 3000, 6000, 9000 psi
Overload pressure - psi	1160, 2900, 7250, 11600, 14500 psi
Burst pressure - psi	2900, 7250, 14500, 29000, 29000 psi
Mechanical connection	G1/4A DIN 3852 male *(bar ranges only)* SAE 6 9/16-18 UNF 2A *(psi ranges only)*
Torque value	15 lb-ft (20 Nm)
Parts in contact with fluid	Stainless steel, FPM seal
Output Data	
Display accuracy to DIN 16086	≤ ±0.5% BFSL ≤ ± 1 % FS max.
Repeatability	≤ ± 0.5 % FS max.
Temperature error	≤ ± 0.017% FS / °F max. zero point ≤ ± 0.017% FS / °F max. range
Long-term stability	≤ ±0.25% FS max. / year
Switching Outputs	
Type	2 PNP transistor outputs
Switching current	max. 250 mA per switching output
Switching cycles	> 100 million
Reaction time	< 10 ms
Environmental Conditions	
Compensated temperature range	-13° to 185°F (-25 to 85°C)
Operating temperature range	-13° to 212°F (-25 to 100°C)
Storage temperature range	-40° to 185°F (-40 to 85°C)
Fluid temperature range	-13° to 257°F (-25 to 125 °C)
Nominal temperature range of display *(read-out)*	5 to 158°F (-15 to 70°C)
CE mark	EN 61000-6-1 / 2 / 3 / 4
c UL us mark *(Environmental conditions to 1.4.2 UL 61010-1; C22.2 No. 61010-1)*	Certificate no. E318391
Vibration resistance to DIN EN 60068-2-6 at 0 to 500 Hz	approx. 10 g
Shock resistance to DIN EN 60068-2-29 (11 ms)	approx. 50 g
Protection class to DIN 40050	IP 67 *(when an IP 67 connector is used)*
Other Data	
Supply voltage -limited energy- *according to:*	9 to 32 VDC without analog output *9.3 UL 61010; Class 2; UL 1310/1585; LPS UL 60950*
Current consumption	max. 0.535 A total max. 35 mA with inactive switching outputs
Display	4-digit, LED, 7-segment, height of digits 4.5 mm
Life expectancy	> 10 million cycles (0 to 100 %)
Weight	approx. 70 g
Reverse polarity protection of the supply voltage, excess voltage, override and short circuit protection	Standard

Model Code

EDS 8 4 X 6 - X - XXXX - 400

Mechanical Connection
4 = G1/4 A DIN 3852 *(outside) (bar ranges only)*
7 = SAE 6 9/16-18 UNF 2A *(psi ranges only)*

Electrical Connection
6 = Connector male M12x1 -4 pole *(without female connector)*

Output
2 = 2 switch outputs

Pressure Range
0500, 1000, 3000, 6000, 9000 psi *(for mechanical connection 7 = SAE 6)*

Modification Number
400 = Standard *(psi)*

Accessories:
Appropriate accessories, such as electrical connectors, mechanical connection adaptors, etc. can be found in the Accessories section.

Pin Connections

M12x1

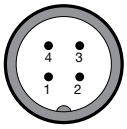

Pin	
1	+U
2	SP 2
3	0V
4	SP 1

Setting Options

All terms and symbols used for setting of EDS 8000 as well as menu structure correspond with the specifications in the VDMA regulations (VDMA 24574-1) for pressure switches. EDS 8000 is easy and comfortable to set by two keys.

Switch Output Setting Ranges

Measuring range (psi)	Lower limit of RP / FL (psi)	Upper limit of SP / FH (psi)	Min. diff. between RP & SP or FL & FH	Increment* (psi)
0 to 500	5	500	5	1
0 to 1000	10	1000	10	2
0 to 3000	30	3000	30	5
0 to 6000	60	6000	60	10
0 to 9000	90	9000	90	20

**All ranges given in the table can be adjusted by the increments shown.*

SP = Set point
RP = Re-set point
FL = Pressure window lower value
FH = Pressure window upper value

Dimensions

M12x1

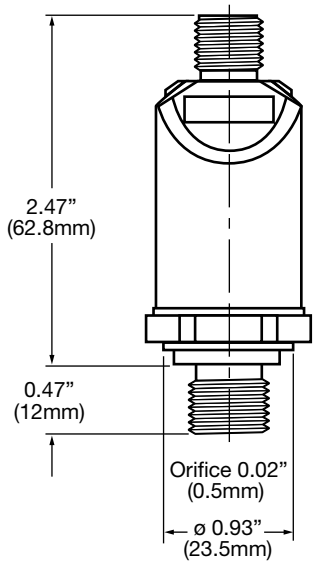

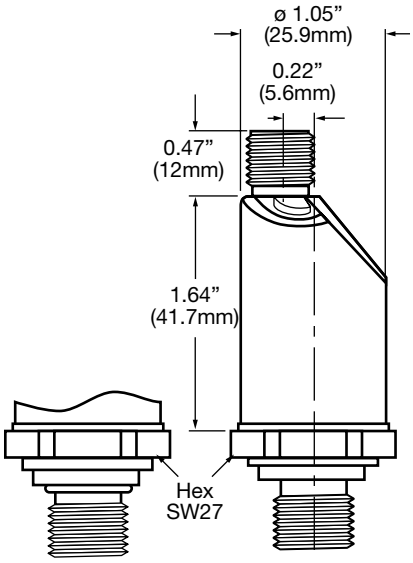

9/16-18UNF2A **G 1/4 A**

EDS 300 Series
Pressure Switch with Display

Applications

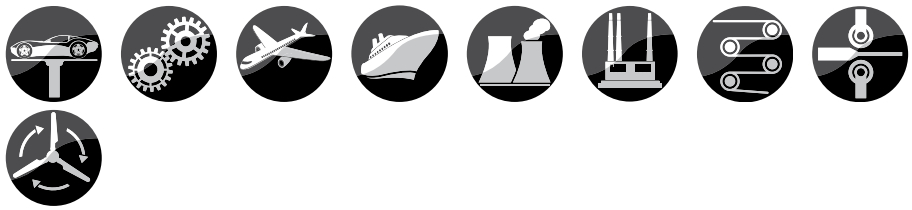

Description

The EDS 300 is a compact electronic pressure switch with digital display. Four different output models are available: with one switching point, with two switching points and both models can also have an additional analog output signal 4 to 20 mA.

The switching points and the corresponding hystereses can be adjusted via keys. For optimum adaptation to a particular application, the unit has many additional adjustment parameters, e.g. switching delay times, N/O / N/C function of the outputs.

The main applications of the EDS 300 are pressure and limit indication in hydraulics and pneumatics and anywhere where a high switching frequency or a constant switching accuracy places too high a demand on a mechanical pressure switch.

The unit is ideal for the construction of accumulator charging circuits or pump and compressor controls.

Special Features

- Integrated pressure sensor with thin-film strain gauge on stainless steel membrane
- Compact, robust construction
- Accuracy ≤ ±0.5% BFSL
- 3 or 4 digit digital display
- User-friendly push button programming
- Switching points and switchback hystereses can be adjusted independently
- Window function
- Many useful additional functions

Approvals

CE mark is a mandatory conformity mark on many products placed on the single market in the European Economic Area

Technical Details

Sensor Specifications	
Measuring ranges - psi	-14.5 to 75, 150, 1000, 3000, 6000, 9000
Overload pressure - psi	290, 290, 2900, 7250, 11600, 14500
Burst pressure - psi	1450, 1450, 7250, 14500, 29000, 29000
Mechanical connection	G1/4A DIN 3852 male *(bar ranges only)* SAE 4 7/16-20 UNF 2B, female *(psi ranges only)*
Tightening torque	G1/4: 15 lb-ft (20 Nm) SAE 4: 11 lb-ft (15 Nm)
Parts in contact with media	Stainless steel
Accuracy (B.F.S.L.) including linearity, hysteresis, and repeatability	≤ ±0.5% BFSL
Temperature compensation zero point	≤ ±0.0085% / °F typ. ≤ ±0.017% / °F max.
Temperature compensation over range	≤ ±0.0085% / °F typ. ≤ ±0.017% / °F max.
Long-term drift	≤ ±0.3% FS typ. / year
Life expectancy	10 million load cycles (0 to 100% FS)
Weight	Approximately 300 g
Output signal	4 to 20 mA, ohmic resistance ≤ 400 Ω
Switching Specifications	
Type	PNP transistor output
Repeatability	≤ ±0.5% FS max.
Switching current	Max. 1.2 A per switching output
Switching cycles	≥ 100 million
Reaction time	< 10 ms
Environmental Condition	
Compensated temperature range	14° to 158°F (-10° to 70°C)
Operating temperature range	-13° to 176°F (-25° to 80°C)
Storage temperature range	-40° to 176°F (-40° to 80°C)
Media temperature range	-13° to 176°F (-25° to 80°C)
CE mark	EN 61000-6-1 / 2 / 3 / 4
Vibration resistance to DIN EN 60068-2-6 at 10 to 500 Hz	≤ 10g
Environmental protection	IP 65
Electrical Specifications	
Supply voltage	20 to 32 VDC
Residual ripple suppy voltage	≤ 5%
Current consumption	100 mA *(plus switching current)*
Reverse polarity protection of the supply voltage, excess voltage, override and short circuit protection	Standard
Display	4-digit, 7-segment LED red

Model Code

EDS 3 X X - X - XXXX - 400

Mechanical Connection*
- 4 = G1/4A DIN 3852 male *(bar ranges only)*
- 5 = SAE 4 7/16-20 UNF 2B, female *(psi ranges only)*

Electrical Connection*
- 4 = 4 pole plug M18x1, Binder Series *(connector not included)*
- 5 = DIN 43650 / ISO plug, 3 pole + ground *(connector ZBE 01 included)*
- 6 = M12x1 plug, 4 pole *(connector not included)*
- 8 = M12x1 plug, 5 pole *(connector not included)*

Output
- 1 = 1 Switching Output *(only with electrical connection 6)*
- 2 = 2 Switching Outputs *(only with electrical connection 6)*
- 3 = 1 Switching Output with 1 analog output *(only with electrical connection 6)*
- 5 = 2 Switching Outputs with 1 analog output *(only with electrical connection 8)*

Pressure Range
For EDS 35X only *(SAE 4 7/16-20 UNF2B)*
0089 (-14.5 to 75), 0150, 1000, 3000, 6000, 9000 psi

Modification Number
- 400 = standard in psi
- 401 = vacuum in psi

**Other options available upon request*

Pin Connections

Binder 714 M18

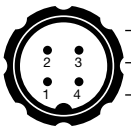

Pin	3X4-2	3X4-3
1	+UB	$+U_B$
2	0 V	0 V
3	SP 1	SP 1
4	SP 2	analog

DIN 43650

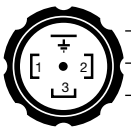

Pin	3X5-1
1	+UB
2	0 V
3	SP 1
4	PE

M12x1, 4 pole

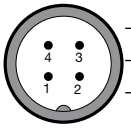

Pin	3X6-1	3X6-2	3X6-3
1	+UB	$+U_B$	$+U_B$
2	nc	SP 2	analog
3	0 V	0 V	0 V
4	SP 1	SP 1	SP 1

M12x1, 5 pole

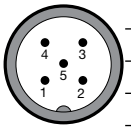

Pin	3X8-5
1	+UB
2	analog
3	0 V
4	SP 1
5	SP 2

Circuit Diagrams

Model EDS 356-1
1 switching output

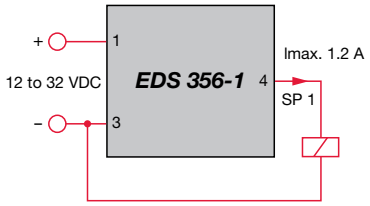

Model EDS 356-2
2 switching outputs

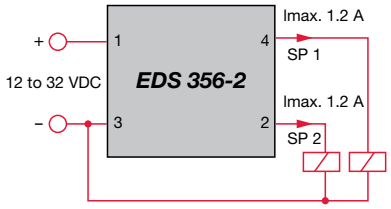

Model EDS 356-3
1 switching output, 1 analog output

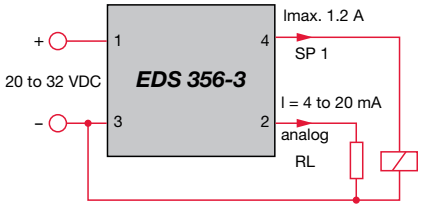

Dimensions

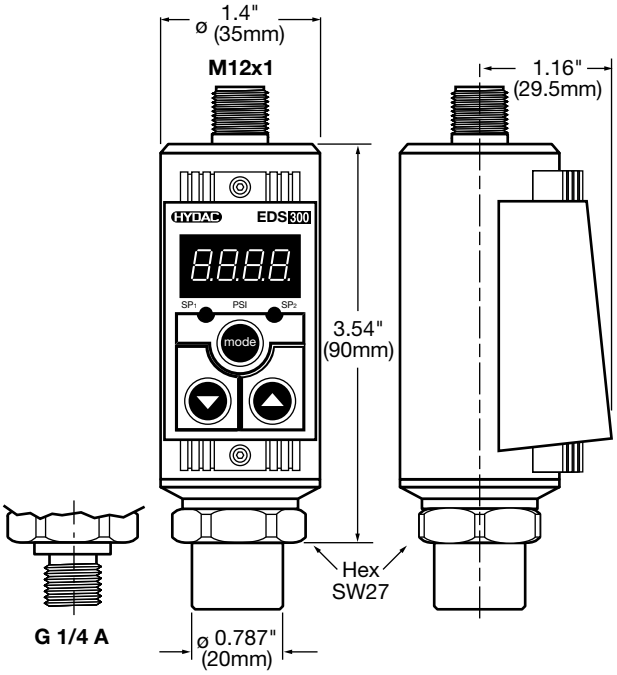

EDS 300 Series

Shipbuilding Pressure Switch with Display

Applications

Description

The EDS 300 is a compact, electronic pressure switch with digital display. The pressure measurement is based on a strain gauge sensor cell on stainless steel. All parts in contact with the medium are stainless steel, and are welded together. Since no seals are required in the sensor interior, the potential for leakage is eliminated.

Two relay switch outputs with N/O function and an additional analog output signal (4 to 20 mA) enable the pressure switch to be incorporated into the most modern control concepts.

The switching points and the corresponding hystereses can be adjusted easily via the keypad.

For optimum adaptation to a particular application, the unit has many additional adjustment parameters, e.g. switching direction of the relays and switching delay times.

Areas of application are pressure for maximum value monitoring on marine transmissions, diesel engines, pumps and general hydraulic and pneumatic systems.

Approvals

CE mark is a mandatory conformity mark on many products placed on the single market in the European Economic Area

American Bureau of Shipping

German Lloyd - GL

Bureau Veritas

Lloyds Register of Shipping - LRS

Det Norske Veritas - DNV

Technical Details

Sensor Specifications	
Measuring ranges - psi	-14.5 to 75, 150, 1000, 3000, 6000, 9000
Overload pressure - psi	290, 290, 2900, 7250, 11600, 14500
Burst pressure - psi	1450, 1450, 7250, 14500, 29000, 29000
Mechanical connection	G1/4A DIN 3852 male *(bar ranges only)* SAE 4 7/16-20 UNF 2B, female *(psi ranges only)*
Tightening torque	G1/4A: 15 ft-lb (20 Nm) SAE 4: 11 lb-ft (15 Nm)
Parts in contact with media	Stainless steel
Accuracy (B.F.S.L.) including linearity, hysteresis, and repeatability	≤ ±0.5% BFSL
Temperature compensation zero point	≤ ±0.0085% / °F typ. ≤ ±0.017% / °F max.
Temperature compensation over range	≤ ±0.0085% / °F typ. ≤ ±0.017% / °F max.
Long-term drift	≤ ±0.3% FS typ. / year
Life expectancy	10 million load cycles (0 to 100% FS)
Weight	Approximately 300 g
Output signal	4 to 20 mA, 2 wire, R_{Lmax} = (UB - 10V) / 20 mA [kΩ]
Switching Specifications	
Type	2 relay contacts (N/O)
Repeatability	≤ ±0.5% FS max.
Switching voltage	max 60 V (AC or DC)
Switching power	max. 30 W / 30 VA *(for inductive load use varistors)*
Switching current	max. 1.0 A
Switching cycles	20 million at minimum load 0.5 million at maximum load
Reaction time	< 10 ms
Environmental Condition	
Compensated temperature range	14° to 158°F (-10° to 70°C)
Operating temperature range	-13° to 176°F (-25° to 80°C)
Storage temperature range	-40° to 176°F (-40° to 80°C)
Media temperature range	-13° to 176°F (-25° to 80°C)
CE mark	EN 61000-6-1 / 2 / 3 / 4
Vibration resistance to DIN EN 60068-2-6 at 10 to 500 Hz	≤ 10g
Environmental protection	IP 65
Electrical Specifications	
Supply voltage	20 to 32 VDC
Residual ripple suppy voltage	≤ 5%
Current Consumption	100 mA *(plus switching current)*
Reverse polarity protection of the supply voltage, excess voltage, override and short circuit protection	Standard
Electrical connection	plug to DIN 43651 (6 pole + earth)
Display	4-digit, 7-segment LED red

Model Code

EDS 3 X X - X - XXXX - S4X PSI

Mechanical Connection*
4 = G1/4A DIN 3852 male *(bar ranges only)*
5 = SAE 4 7/16-20 UNF 2B, female *(psi ranges only)*

Electrical Connection*
7 = DIN 43651 plug, 6 pole + ground *(connector ZBE 10 not included)*

Output
4 = 2 Switching outputs and 1 analog output

Pressure Range
For EDS 35X only *(SAE 4 7/16-20 UNF2B)*
0089 (-14.5 to 75), 0150, 1000, 3000, 6000, 9000 psi

Modification Number
S40 = Standard in psi *(except for -14.5 to 75 psi)*
S41 = Vacuum version in -14.5 to 75 psi

(psi)
psi version *(leave blank for bar version)*

**Other options available upon request*

Pin Connections

DIN 43651

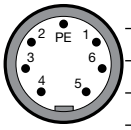

Pin	347-4
1	$+U_B$
2	center relay 1 and 2
3	relay contact 1 (SP 1)
4	0 V
5	analog
6	relay contact 2 (SP 2)
⊥	PE

Circuit Diagram

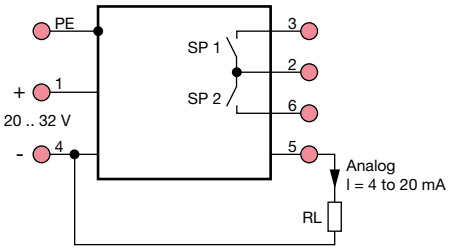

Plug Connection

ZBE 10

Available Adapter

SAE-4 (m) to 1/4 NPT (m) Stainless Steel
Part #02701426

Dimensions

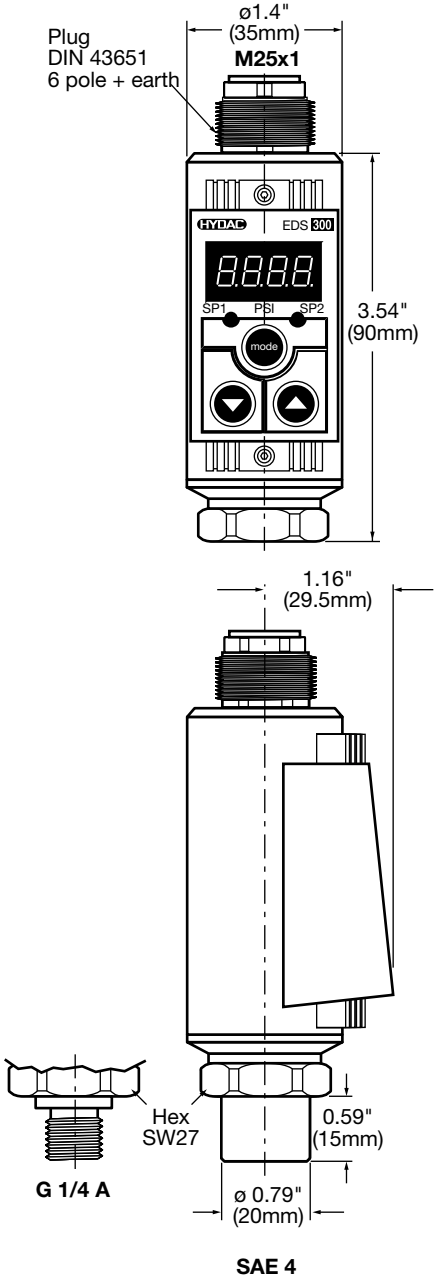

EDS 4300 Series
Low Pressure Programmable Switch

Applications

Description

The programmable electronic pressure switch in the EDS 4300 series has been specially developed to combine the advantages of a compact, robust and cost-effective unit with the benefits of a programmable pressure switch.

The EDS 4300 can be easily programmed using the HPG 3000 programming unit. When the programming unit is disconnected from the EDS 4300, the pressure switch retains all the settings. This prevents unauthorized adjustment of the settings.

The following parameters can be changed:

- Switching point
- Hysteresis
- Switching direction (N/O / N/C)
- Switching delay times

The EDS 4300 is suitable for high pressure applications *(over 500 psi)* and has a pressure measurement cell with thin-film strain gauge on a stainless steel membrane.

In contrast to pressure switches which are permanently pre-set according to customer requirements, the programmable EDS 4300 is highly versatile and replaces a wide range of models.

Special Features

- Option of 1 or 2 switching outputs
- Option of PNP or NPN switching outputs
- High switching output capacity
- Accuracy ≤ ±0.5% BFSL
- Individual programming
- Compact and robust design
- Also available in ATEX version for potentially explosive locations

Approvals

CE mark is a mandatory conformity mark on many products placed on the single market in the European Economic Area

Technical Details

Sensor Specifications		
Measuring ranges - psi	-14.5 to 135.5, 15, 50, 100, 150, 250, 500	
Overload pressure - psi	450, 45, 150, 290, 450, 725, 1500	
Burst pressure - psi	650, 70, 250, 400, 650, 1000, 2500	
Mechanical connection	G1/4A DIN 3852 male *(bar ranges only)* 1/4”-18 NPT male *(psi ranges only)*	
Tightening torque	G1/4: 15 lb-ft (20 Nm) 1/4” NPT: 30 lb-ft (40 Nm)	
Parts in contact with media	Stainless steel, Ceramic, FPM or EPDM seal	
Accuracy (B.F.S.L.) including linearity, hysteresis, and repeatability	≤ ±0.5% BFSL.	
Temperature compensation zero point	≤ ±0.0085% / °F typ.	≤ ±0.017% / °F max.
Temperature compensation over range	≤ ±0.0085% / °F typ.	≤ ±0.017% / °F max.
Long-term drift	≤ ±0.3% FS typ. / year	
Life expectancy	10 million load cycles (0 to 100% FS)	
Weight	Approximately 145 g	
Switching Specifications		
Type	PNP or NPN output	
Repeatability	≤ ±0.1% FS max.	
Switching current	1 Switching output 2 Switching outputs	1.2A 1.0A each
Set point / Reset point	Programmed using HPG 3000 Programming Unit	
Set point in psi	5 to 100% of full range	
Hysteresis in psi	1 to 96% of full range	
NO / NC	Programmed using HPG 3000 Programming Unit	
Switch on/off delay	8 to 2000 ms programmed using HPG 3000	
Switching cycles	≥ 100 million	
Environmental Condition		
Compensated temperature range	-13° to 185°F (-25° to 85°C)	
Operating temperature range	-13° to 185°F (-25° to 85°C)	
Storage temperature range	-40° to 212°F (-40° to 100°C)	
Media temperature range	-40° to 212°F (-40° to 100°C)	
CE mark	EN 61000-6-1 / 2 / 3 / 4	
Vibration resistance to DIN EN 60068-2-6 at 10 to 500 Hz	≤ 20g	
Environmental protection	IP 67 *(ZBE 06 molded cable)*	
Electrical Specifications		
Supply voltage	8 to 32 VDC	
Residual ripple suppy voltage	≤ 5%	
Current consumption	25 mA *(plus switching current)*	
Reverse polarity protection of the supply voltage, excess voltage, override and short circuit protection	Standard	

Model Code

EDS 4 3 X X - XXXX - X P X - 000 - X1 (PSI)

Mechanical Connection*
4 = G1/4A DIN 3852 male *(bar ranges only)*
8 = 1/4"-18 NPT *(psi ranges only)*

Electrical Connection*
8 = M12x1 plug, 5 pole *(connector not included)*

Pressure Range
For EDS 4388 *(1/4"-18 NPT only)*
0135, 0015, 0050, 0100, 0150, 0250, 0500 psi

Output
1 = 1 Switching Output
2 = 2 Switching Outputs

Output Technology
P = Programmable switching output

Output Type
P = PNP switching output
N = NPN switching output

Modification Number
000 = Standard

Seal Material
F1 = FPM Seal *(hydraulic oil)*
E1 = EPDM Seal *(coolant, ammonia, water)*

(psi)
psi version *(leave blank for bar version)*

**Other options available upon request*

Pin Connections

M12x1, 5 pole

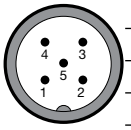

Pin	Process connection	HPG connection
1	$+U_B$	$+U_B$
2	Out 2	nc
3	0 V	0 V
4	Out 1	nc
5	nc	COM port

In process a 4 pole mating connector (e.g. ZBE 06) has to be used.

Dimensions

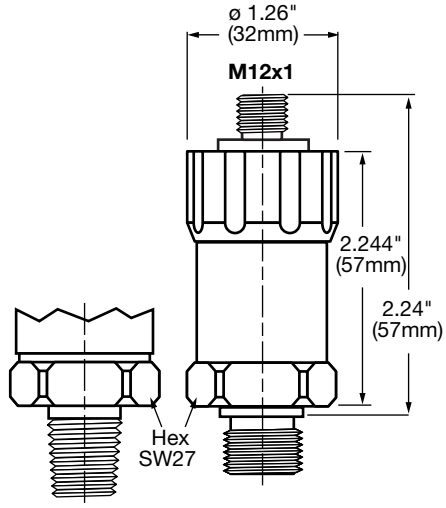

1/4-18 NPT Male G1/4A

HPG 3000 Programming Unit

Manual available online
Part #00909422

ZBE 30-02

Part #06040851

HPG 3000 Power Supply with Connector

Part #02091103

EDS 4400 Series
High Pressure Programmable Switch

Applications

Description

The programmable electronic pressure switch in the EDS 4400 series has been specially developed to combine the advantages of a compact, robust and cost-effective unit with the benefits of a programmable pressure switch.

The EDS 4400 can be easily programmed using the HPG 3000 programming unit. When the programming unit is disconnected from the EDS 4400, the pressure switch retains all the settings. This prevents unauthorised adjustment of the settings.

The following parameters can be changed:

- Switching point
- Hysteresis
- Switching direction (N/O / N/C)
- Switching delay times

The EDS 4400 is suitable for high pressure applications *(over 500 psi)* and has a pressure measurement cell with thin-film strain gauge on a stainless steel membrane.

In contrast to pressure switches which are permanently pre-set according to customer requirements, the programmable EDS 4400 is highly versatile and replaces a wide range of models.

Special Features

- Option of 1 or 2 switching outputs
- Option of PNP or NPN switching outputs
- High switching output capacity
- Accuracy ≤ ±0.5% BFSL
- Individual programming
- Compact and robust design
- Also available in ATEX version for potentially explosive locations

Approvals

CE mark is a mandatory conformity mark on many products placed on the single market in the European Economic Area

Technical Details

Sensor Specifications	
Measuring ranges - psi	1000, 3000, 6000, 9000
Overload pressure - psi	2900, 7250, 11600, 14500
Burst pressure - psi	7250, 14500, 29000, 29000
Mechanical connection	G1/4A DIN 3852 male *(bar ranges only)* SAE 6 9/16-18 UNF 2A *(psi ranges only)*
Tightening torque	15 lb-ft (20 Nm)
Parts in contact with media	Stainless steel, FPM seal
Accuracy (B.F.S.L.) including linearity, hysteresis, and repeatability	≤ ±0.5% BFSL
Temperature compensation zero point	≤ ± 00085% / °F typ. ≤ ±0.017% / °F max.
Temperature compensation over range	≤ ±0.0085% / °F typ. ≤ ±0.017% / °F max.
Long-term drift	≤ ±0.3% FS typ. / year
Life expectancy	10 million load cycles (0 to 100% FS)
Weight	Approximately 145 g
Switching Specifications	
Type	PNP or NPN output
Repeatability	≤ ±0.1% FS max.
Switching current	1 Switching output 1.2A 2 Switching outputs 1.0A
Set point / Reset point	Programmed using HPG 3000 Programming Unit
Set point in psi	5 to 100% of full range
Hysteresis in psi	1 to 96% of full range
NO / NC	Programmed using HPG 3000 Programming Unit
Switching cycles	≥ 100 million
Environmental Condition	
Compensated temperature range	-13° to 185°F (-25° to 85°C)
Operating temperature range	-13° to 185°F (-25° to 85°C)
Storage temperature range	-40° to 212°F (-40° to 100°C)
Media temperature range	-40° to 212°F (-40° to 100°C)
CE mark	EN 61000-6-1 / 2 / 3 / 4
Vibration resistance to DIN EN 60068-2-6 at 10 to 500 Hz	≤ 20g
Environmental protection	IP 67 *(ZBE 06 molded cable)*
Electrical Specifications	
Supply voltage	8 to 32 VDC
Residual ripple suppy voltage	≤ 5%
Current consumption	25 mA *(plus switching current)*
Reverse polarity protection of the supply voltage, excess voltage, override and short circuit protection	Standard

Model Code

EDS 4 4 X X - XXXX - X - P X - 000 (PSI)

Mechanical Connection*
4 = G1/4A DIN 3852 male *(bar ranges only)*
7 = SAE 6 9/16-18 UNF2A *(psi ranges only)*

Electrical Connection*
8 = M12x1 plug, 5 pole *(connector not included)*

Pressure Range
For EDS 4478 *(SAE 6 9/16-18 only)*
1000, 3000, 6000, 9000 psi

Output
1 = 1 Switching Output
2 = 2 Switching Outputs

Output Technology
P = Programmable switching output

Output Type
P = PNP switching output
N = NPN switching output

Modification Number
000 = Standard

(psi)
psi version *(leave blank for bar version)*

**Other options available upon request*

Pin Connections

M12x1, 5 pole

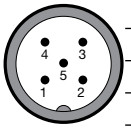

Pin	Process connection	HPG connection
1	$+U_B$	$+U_B$
2	Out 2	nc
3	0 V	0 V
4	Out 1	nc
5	nc	COM port

In process a 4 pole mating connector (e.g. ZBE 06) has to be used.

Dimensions

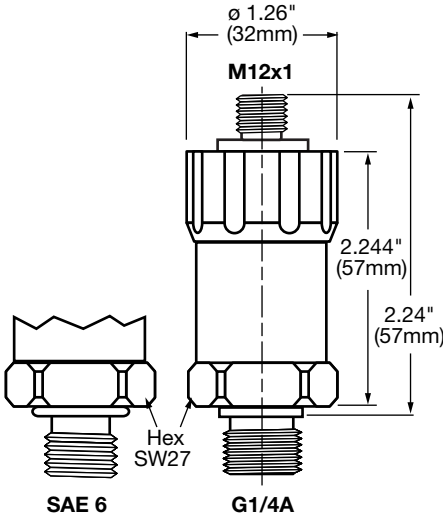

HPG 3000 Programming Unit

Manual available online
Part #00909422

ZBE 30-02

Part #06040851

HPG 3000 Power Supply with Connector

Part #02091103

EDS 1700 Series
Pressure Switch with Display

Applications

Description

The EDS 1700, with its integrated pressure measuring cell, a 4-digit display and the 4 switching outputs, offers the user all the advantages of a modern electronic pressure switch.

4 switching points and reset points can be adjusted very simply and independently of each other using the keypad.

For optimum incorporation into monitoring systems *(e.g. with PLC)*, an analog output (4 to 20 mA or 0 to 10 V) is also available.

The main applications of the EDS 1700 are in hydraulics and pneumatics. The instrument is ideal for use where frequent switching cycles *(several million)* require permanent switching point accuracy for simple and precise adjustment

Special Features

- Integrated pressure sensor with strain gauge on stainless steel membrane
- Accuracy 0.25% or 0.5% BFSL
- 4-digit digital display
- User-friendly key programming
- 4 limit relays, switching points and reset points can be adjusted independently
- Analog output signal selectable
- Many useful additional functions
- Optional mounting position *(pressure connection on the top/bottom, keypad and display can be turned through 180°)*
- Can be set to display values in any unit of measurement e.g.: kN, kg, psi, ...

Approvals

CE mark is a mandatory conformity mark on many products placed on the single market in the European Economic Area

Technical Details

Sensor Specifications	
Measuring ranges - psi	232, 580, 1450, 3625, 5800, 8700
Overload pressure - psi	464, 1160, 2900, 7250, 11600, 14500
Burst pressure - psi	2900, 2900, 7250, 14500, 29000, 29000
Mechanical connection	G1/4A DIN 3852, female
Tightening torque	15 lb-ft (20 Nm)
Parts in contact with media	Stainless steel
Accuracy (B.F.S.L.) including linearity, hysteresis, and repeatability	≤ ±0.25% BFSL (EDS 1700-P) ≤ ±0.5% BFSL (EDS 1700-N)
Temperature drift zero point & range EDS 1700-N EDS 1700-P	≤ ±0.0.0085% / FS typ. ≤ ±0.017% / FS max. ≤ ±0.006% / FS typ. ≤ ±0.012% / FS max.
Long-term drift	≤ ± 0.3% FS typ. / year
Life expectancy	10 million load cycles (0 to 100% FS)
Weight	Approximately 800 g
Output signal	4 to 20 mA, ohmic resistance ≤ 400 Ω 0 to 10 V, ohmic resistance ≥ 2 kΩ
Switching Specifications	
Type	4 relays with change-over contacts in 2 groups *(common supply of each group connected)*
Repeatability	≤ ±0.25% FS max. (EDS 1700-P) ≤ ±0.5% FS (EDS 1700-N)
Switching voltage	100mV to 250 V (AC or DC)
Switching current	0.009 to 2A *(per output)*
Switching power	max. 50 W / 400 VA *(for inductive load use varistors)*
Set point range	1.5 to 100% FS
Reset point range	1 to 99% FS
Switching cycles	> 20 million at minimum load > 1 million at maximum load
Reaction time	< 20 ms
Environmental Condition	
Compensated temperature range	-14° to 158°F (-10° to 70°C)
Operating temperature range	-13° to 140°F (-25° to 60°C)
Storage temperature range	-40° to 176°F (-40° to 80°C)
Media temperature range	-13° to 176°F (-25° to 80°C)
CE mark	EN 61000-6-1 / 2 / 3 / 4
Vibration resistance to DIN EN 60068-2-6 at 10 to 500 Hz	≤ 5g
Environmental protection	IP 65
Electrical Specifications	
Supply voltage	22 to 32 VDC
Residual ripple suppy voltage	≤ 10%
Current consumption	approximately 200 mA
Electrical connection	14-pole terminal block
Reverse polarity protection of the supply voltage, excess voltage, override and short circuit protection	Standard
Display	7 segment LED display, 4 digits, 13 mm high

Model Code

EDS 17 9 X - X - XXXX - 000

Mechanical Connection
9 = G 1/4 DIN 3852 female port

Display
2 = 4 digit psi

Accuracy
P = 0.25% B.F.S.L.
N = 0.5% B.F.S.L.

Pressure Range
For EDS 1792X only *(4 digit psi)*
016 (232), 040 (580), 100 (1450), 250 (3625), 400 (5800), 600 (8700) bar (psi)

Modification Number
000 = Standard

Pin Connections

Pin	
1	$+U_B$
2	0 V
3	Analog output signal +
4	Analog output signal -
5	Relay 1 N/C
6	Relay 1 N/C
7	Center relay 1 and 2
8	Relay 2 N/C
9	Relay 2 N/O
10	Relay 3 N/C
11	Relay 3 N/O
12	Center relay 3 and 4
13	Relay 4 N/C
14	Relay 4 N/O

Dimensions

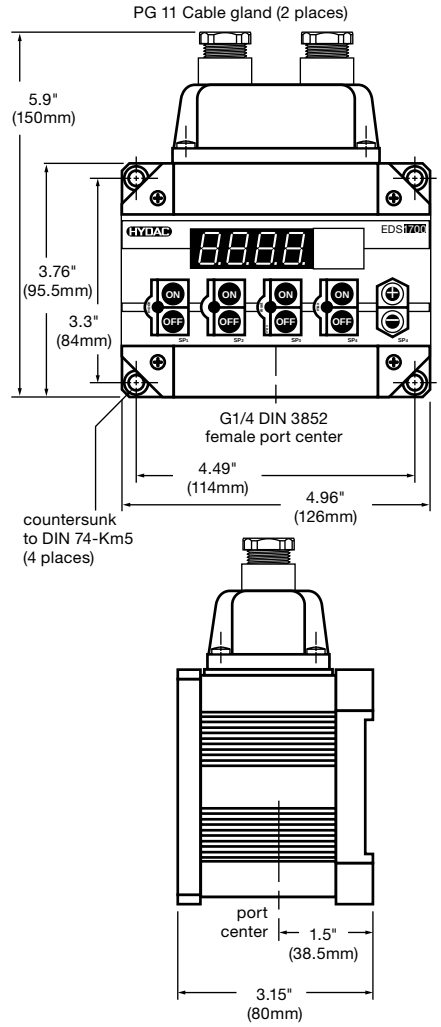

ETS 4000 Series
Temperature Transducer

Applications

Description

The ETS 4000 is a robust electronic temperature transmitter which is particularly well suited to measuring temperature in hydraulic applications in industry.

The temperature sensor, based on a PT 100 and corresponding evaluation electronics, is capable of measuring temperatures in the range -13° to 212°F.

The sensor has analog output signals of 4 to 20 mA and 0 to 10 V available as standard to enable integration into modern controls.

The pressure resistance up to 9000 psi and excellent EMC characteristics make the ETS 4000 ideal for use in harsh conditions.

Special Features

- Ideal for industrial applications
- Robust design
- Excellent EMC characteristics
- Good long-term stability
- Standard protection class IP 65

Approvals

CE mark is a mandatory conformity mark on many products placed on the single market in the European Economic Area

Technical Details

Sensor Specifications	
Measuring range	-13° to 212°F (-25° to 100°C)
Rated pressure -psi (bar)	9000 (600)
Overload pressure - psi (bar)	13,000 (900)
Mechanical connection	G1/4A DIN 3852 male
Tightening torque	15 lb-ft (20 Nm)
Parts in contact with media	Stainless steel, FPM seal
Accuracy	≤ ±1.8°F (1°C) max
Weight	Approximately 200 g
Output signal	4 to 20 mA, 2 wire, R_{Lmax} = (UB - 10V) / 20 mA [kΩ] 0 to 10 V, 3 wire, R_{Lmin} = 2 kΩ
Reaction Time T90 / T50	9 s / 3 s
Environmental Condition	
Ambient temperature range	-22° to 158°F (-30° to 70°C)
Storage temperature range	-40° to 212°F (-40° to 100°C)
Media temperature range	-22° to 212°F (-30° to 100°C)
CE mark	EN 61000-6-1 / 2 / 3 / 4
Vibration resistance to DIN EN 60068-2-6 at 10 to 500 Hz	≤ 20g
Environmental protection	IP 65
Electrical Specifications	
Supply voltage, 2-wire	10 to 30 VDC
Supply voltage, 3-wire	12 to 30 VDC
Residual ripple suppy voltage	≤ 5%
Current consumption	approximately 25 mA
Reverse polarity protection of the supply voltage, excess voltage, override and short circuit protection	Standard

Model Code

ETS 4 1 4 X - X - 000

Mechanical Connection
4 G1/4 A DIN 3852 male

Electrical Connection
4 4 pole plug M18x1, Binder Series *(connector not included)*
6 M12x1 plug, 4 pole *(connector not included)*

Output
A 4-20mA, 2-wire
B 0-10VDC, 3-wire

Modification Number
000 Standard

Pin Connections

Binder 714 M18

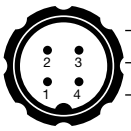

Pin	4144-A	4144-B
1	nc	$+U_B$
2	Signal +	Signal
3	Signal -	0V
4	nc	nc

M12x1

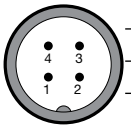

Pin	4146-A	4146-B
1	Signal +	$+U_B$
2	nc	nc
3	Signal -	0V
4	nc	Signal

Circuit Diagram

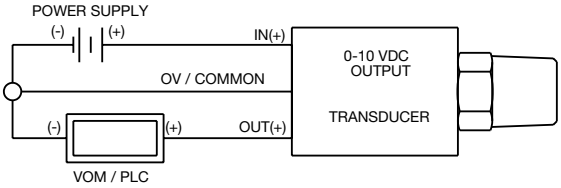

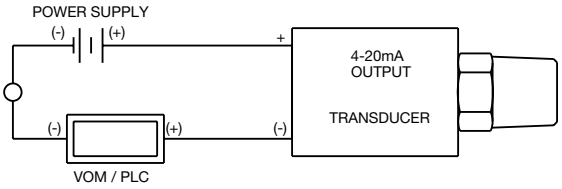

Dimensions

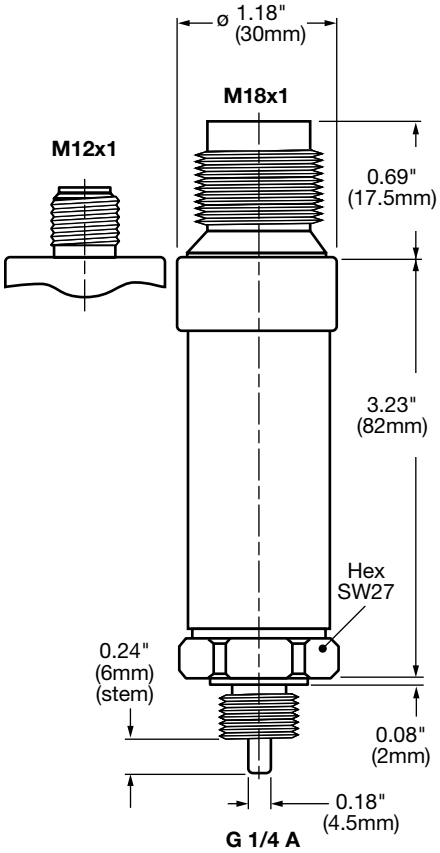

ETS 7000 Series

Standard, For Special Configurations order quantity is 250 pieces

Applications

Description

The ETS 7000 is an electronic temperature transmitter which, due to its compact design, is particularly suited to measuring temperature in hydraulic applications in the industrial and mobile sectors. Based on a silicon semiconductor device and corresponding evaluation electronics, the temperature sensor is designed to measure temperatures in the range -13° to 212°F.

The sensor has various analog output signals as standard, e.g. 4 to 20 mA or 0 to 10 V to enable integration into modern controls through the male M12x1 connection.

The pressure resistance up to 8700 psi and excellent EMC characteristics make the ETS 7000 ideal for use in harsh conditions.

Special Features

- Ideal for OEM applications
- Very compact design
- Excellent EMC characteristics
- Long-term stability
- Standard protection class IP 67

Approvals

CE mark is a mandatory conformity mark on many products placed on the single market in the European Economic Area

Technical Details

Sensor Specifications	
Measuring principle	Silicon semiconductor element
Measuring range	-13° to 212°F (-25° to 100°C)
Pressure resistance - psi	8700
Pressure overload - psi	13000
Mechanical connection	G1/4 DIN 2852
Torque rating	15 lb-ft (20 Nm)
Parts in contact with media	Stainless steel, FPM seal
Output data	
Output signal	4 to 20 mA, 2 wire, R_{Lmax} = (UB - 8V) / 20 mA [kΩ] 0 to 10 V, 3 wire, R_{Lmin} = 2 kΩ
Accuracy	≤ ±1.5%FS typ.
Rise time T90 / T50	≤ 8 s / ≤ 4 s
Operating conditions	
Ambient temperature range	-13° to 176°F (-25° to 80°C)
Storage temperature range	-40° to 212°F (-40° to 100°C)
Fluid temperature range	-13° to 212°F (-25° to 100°C)
CE mark	EN 61000-6-1 / 2 / 3 / 4
Vibration resistance to	≤ 20 g
Safety type to DIN 40050	IP 67 *(w/ ZBE 06 molded cable or flying lead)*
Other data	
Supply voltage 2 conductor	8 to 32 V DC
Supply voltage 3 conductor	12 to 32 V DC
Residual ripple of supply voltage	≤ 5%
Current consumption 3 conductor	approx. 25 mA
Weight	approx. 50 g

Model Code

ETS 7 2 X 6 - A - 000

Mechanical Connection
4 = G1/4 A male

Electrical Connection
6 = M12x1 plug, 4 pole *(connector not included)*

Output Signal
A = 2 conductor, 4 to 20mA
B = 3 conductor, 0 to 10 VDC

Modification Number
000 = standard

Pin Connections

M12x1, 4 pole

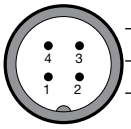

Pin	7246-A	7246-B
1	Signal +	$+U_B$
2	nc	nc
3	Signal -	0 V
4	nc	Signal

Example for a Customized Solution

ETS 7286-A-007
Part #00909861
Unit designed with 2” probe and 1/4” NPT fitting

Circuit Diagram

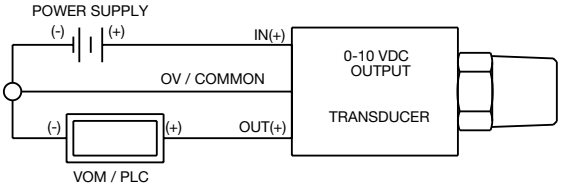

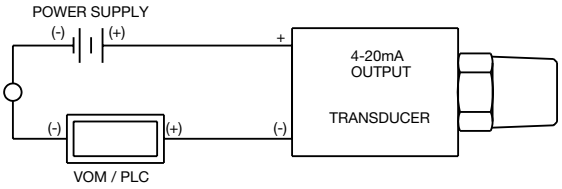

Dimensions

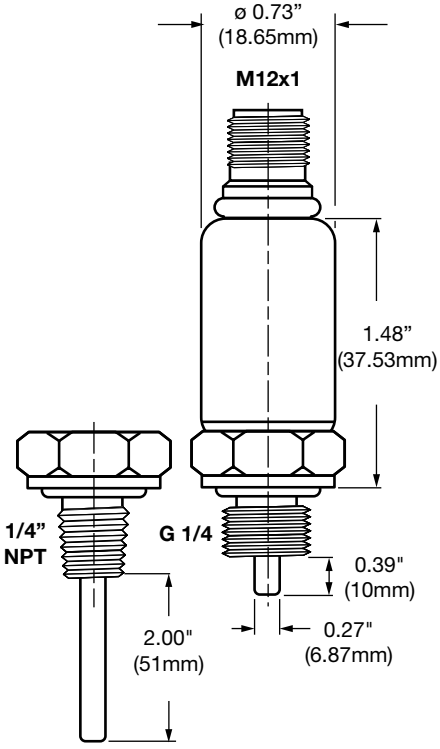

ETS 3200 Series

Temperature Switch for Inline and Tank Mounting

Applications

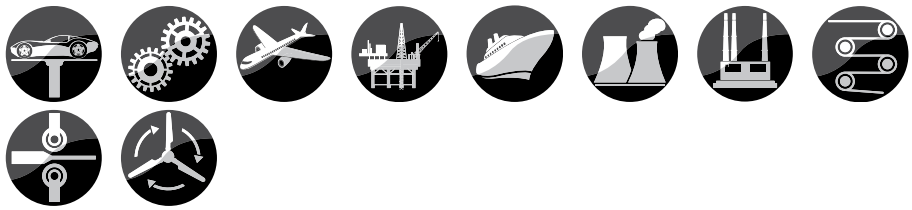

Description

The ETS 3200 is a compact electronic temperature switch with 4-digit digital display.

Pressure resistant to 8700 psi, this model has an integral 18 mm temperature probe and can be screwed directly inline or into a hydraulic block.

Different output models with one or two switching outputs, optionally with an additional analog output signal, offer a variety of application possibilities. The switching points and the associated hystereses can be adjusted very quickly and easily using the keypad.

For optimum adaptation to the particular application, the unit has many additional adjustment parameters *(e.g. switching delay times, N/C / N/O function, etc.)*.

Special Features

- 2 switching outputs, up to 1.2 A load per output
- Analog output selectable (4 to 20 mA / 0 to 10 V)
- 4-digit digital display
- Optimum alignment - display can be rotated in two planes *(axes)*
- Switching / reset points and many useful additional functions can be set using keypad
- Display of temperature and unit of measurement in °C or °F

Approvals

CE mark is a mandatory conformity mark on many products placed on the single market in the European Economic Area

Technical Details

Sensor Specifications		
Measuring range	-13° to 212°F (-25° to 100°C)	
Probe length - pressure resistance	18 mm probe 100 mm probe 250 mm probe 350 mm probe	9000 psi 725 psi 725 psi 725 psi
Mechanical connection	G1/2 A DIN 3852 male	
Tightening torque	33 lb-ft (45 Nm)	
Parts in contact with media	Stainless steel, FPM seal	
Accuracy *(display, analog output)*	2°F (1°C)	
Temperature drift *(ambient)*	≤ ±0.0085% FS / °F max. zero point ≤ ±0.0085% / °F max. range	
Weight	with 18 mm probe with 100 mm probe with 250 mm probe with 350 mm probe	Approximately 135g Approximately 150g Approximately 185g Approximately 210g
Output signal *(selectable)*	4 to 20 mA, ohmic resistance max. 500 Ω 0 to 10 V, ohmic resistance min. 1 kΩ corresponds in each case to -25 to 100°C	
Switching Specifications		
Type	PNP transistor	
Switching current	1.2A per output	
Switching cycles	≥ 100 million	
Rise time to DIN EN 60751	18mm probe other probes	T50 : 3s / T90 : 9s T50 : 8s / T90 : 15s
Environmental Condition		
Operating temperature range	-13° to 176°F (-25° to 80°C) -13° to 140°F (-25° to 60°C) with UL rating	
Storage temperature range	-40° to 185°F (-40° to 85°C)	
Media temperature range	-40° to 212°F (-40° to 100°C)	
CE mark	EN 61000-6-1 / 2 / 3 / 4	
c UL us mark *(Environmental conditions to 1.4.2 UL 61010-1; C22.2 No. 61010-1)*	Certificate no. E318391	
Vibration resistance to DIN EN 60068-2-6 at 10 to 500 Hz	≤ 10g	
Environmental protection	IP 67 *(ZBE 06 / 08 molded cable)*	
Electrical Specifications		
Supply voltage -limited energy- *according to:*	9 to 35 VDC without analog output 18 to 35 VDC with analog output *9.3 UL 61010; Class 2; UL 1310/1585; LPS UL 60950*	
Residual ripple suppy voltage	≤ 5%	
Current consumption	max. 2.455 A total max. 35 mA with inactive switching outputs max. 55 mA with analog output and inactive switching outputs	
Reverse polarity protection of the supply voltage, excess voltage, override and short circuit protection	Standard	
Display	7 segment LED display, 4 digits	

Model Code

ETS 3 2 2 - X - X - XXXX - 400

Mechanical Connection
2 = G 1/2 A DIN 3852, male with integral sensor

Electrical Connection
6 = M12x1 plug, 4 pole for output codes 2 & 3 *(connector not included)*
8 = M12x1 plug, 5 pole for output code 5 *(connector not included)*

Output
2 = 2 Switching Outputs *(only with electrical connection 6)*
3 = 1 Switching Output with 1 analog output *(only with electrical connection 6)*
5 = 2 Switching Outputs with 1 analog output *(only with electrical connection 8)*

Probe Length
0018 = 18mm (0.71")
0100 = 100mm (3.93")
0250 = 250mm (9.84")
0350 = 350mm (13.8")

Modification Number
400 = Standard *(preset to °F)*

Pin Connections

M12x1, 4 pole

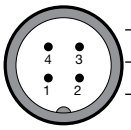

Pin	3226-2	3226-3
1	$+U_B$	$+U_B$
2	SP 2	analog
3	0 V	0 V
4	SP 1	SP 1

M12x1, 5 pole

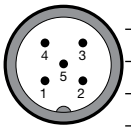

Pin	3228-5
1	$+U_B$
2	analog
3	0 V
4	SP 1
5	SP 2

Circuit Diagram

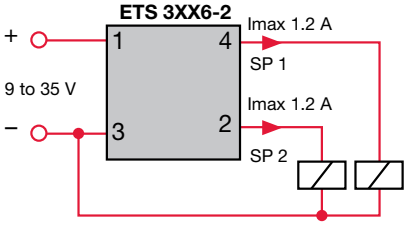

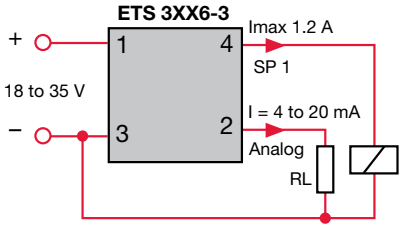

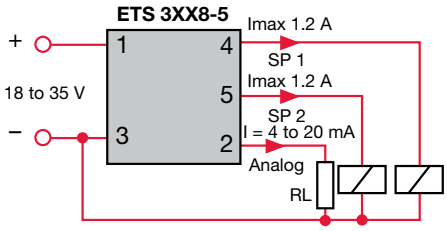

Dimensions

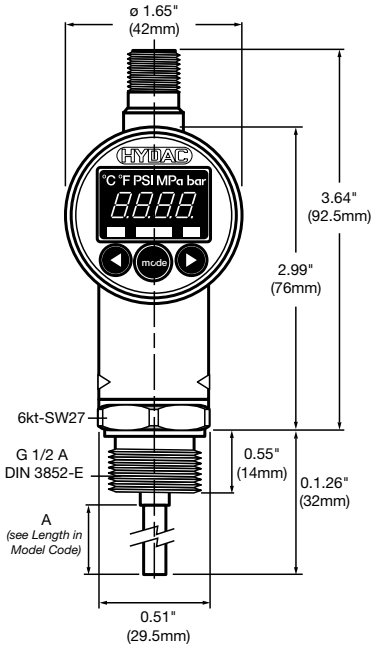

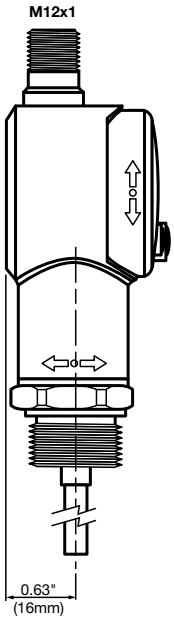

ETS 3800 Series

Temperature Switch with Separate Temperature Probe

Applications

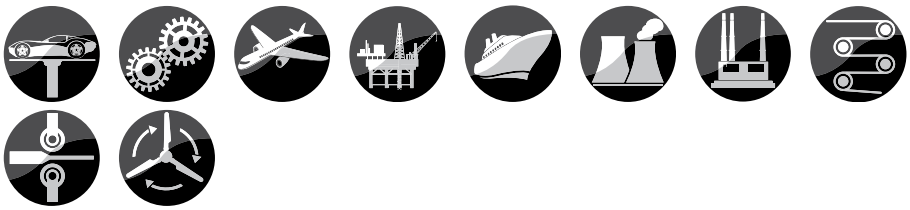

Description

The ETS 3800 is a compact electronic temperature switch with a 4-digit digital display.

In the model for separate temperature probe, the measuring range is -20 to 300°F and is used primarily with the temperature probe TFP 100 which was specially developed for tank mounting.

It is also possible, however, to use standard PT 100 temperature probes. Different output models with one or two switching outputs, optionally with an additional analog output signal, offer a variety of application possibilities.

The switching points and the associated hystereses can be adjusted very quickly and easily using the keypad.

For optimum adaptation to the particular application, the unit has many additional adjustment parameters *(e.g. switching delay times, N/C / N/O function, etc.)*.

Special Features

- 2 switching outputs, up to 1.2 A load per output
- Analog output selectable (4 to 20 mA / 0 to 10 V)
- 4-digit digital display
- Optimum alignment - display can be rotated in two planes (axes)
- Switching / switch-back points and many useful additional functions can be set using keypad
- Displays temperature

Approvals

CE mark is a mandatory conformity mark on many products placed on the single market in the European Economic Area

Technical Details

Sensor Specifications	
Measuring range	-22° to 302°F (-30° to 150°C)
Mechanical connection	Cable connection M12x1, 4-pole
Temperature drift *(ambient)*	≤ ±0.0085% FS / °F max. zero point ≤ ±0.0085% / °F max. range
Weight	Approximately 87g
Output signal	4 to 20 mA, ohmic resistance max. 500 Ω 0 to 10 V, ohmic resistance min. 1 kΩ corresponds in each case to -25 to 100°C
External Temperature Sensor Specifications	
Rated pressure for external sensor *(TFP 100)*	145 psi (10 bar)
Media temperature range	-40° to 257°F (-40° to 125°C)
Electrical connection	M18x1, 4 pole
Safety Sleeve Thermowell	
Parts in contact with medium	Nickel-plated Brass
Switching Specifications	
Type	PNP transistor
Switching current	1.2A per output
Switching cycles	≥ 100 million
Environmental Condition	
Ambient temperature range	-13° to 176°F (-25° to 80°C) -13° to 140°F (-25° to 60°C) with UL rating
Storage temperature range	-40° to 185°F (-40° to 85°C)
CE mark	EN 61000-6-1 / 2 / 3 / 4
c UL us mark *(Environmental conditions to 1.4.2 UL 61010-1; C22.2 No. 61010-1)*	Certificate no. E318391
Vibration resistance to DIN EN 60068-2-6 at 0 to 500 Hz	≤ 10g
Environmental protection	IP 67 *(ZBE 06/08 molded cable)*
Electrical Specifications	
Supply voltage -limited energy- *according to:*	9 to 35 VDC without analog output 18 to 35 VDC with analog output *9.3 UL 61010; Class 2; UL 1310/1585; LPS UL 60950*
Residual ripple suppy voltage	≤ 5%
Current consumption	max. 2.455 A total max. 35 mA with inactive switching outputs max. 55 mA with analog output and inactive switching outputs
Reverse polarity protection of the supply voltage, excess voltage, override and short circuit protection	Standard
Display	7 segment LED display, 4 digits

Model Code

ETS 3 8 6 X - X - 000 - 400

Mechanical Connection
6 = Female cable connection M12x1, 4 pole

Electrical Connection
6 = M12x1 plug, 4 pole for output codes 2 & 3 *(connector not included)*
8 = M12x1 plug, 5 pole for output code 5 *(connector not included)*

Output
2 = 2 Switching Outputs *(only with electrical connection 6)*
3 = 1 Switching Output with 1 analog output *(only with electrical connection 6)*
5 = 2 Switching Outputs with 1 analog output *(only with electrical connection 8)*

Probe Length
000 = For external temperature sensor (TFP 100)

Modification Number
400 = Standard *(preset to °F)*

Supplied Accessories: A male connector M12 x1, 4 pole and 3 meter LIYCY 4x0.25 mm² are supplied with the device to connect to external temperature probe

Non-Supplied Accessories: External Sensor (TFP 100) must be used with TFP 100 thermowell.

TFP 100 Part Number: 00904696
TFP 100 Thermowell (Safety Sleeve) Part Number: 00906170

Pin Connections

M12x1, 4 pole

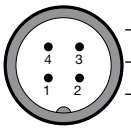

Pin	3866-2	3866-3
1	$+U_B$	$+U_B$
2	SP 2	analog
3	0 V	0 V
4	SP 1	SP 1

M12x1, 5 pole

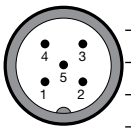

Pin	3286-5
1	$+U_B$
2	analog
3	0 V
4	SP 1
5	SP 2

Circuit Diagram

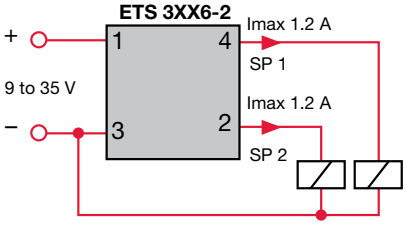

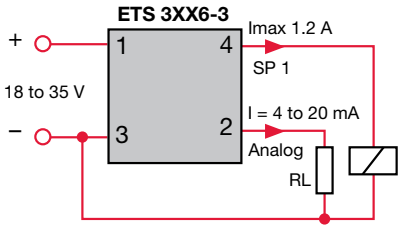

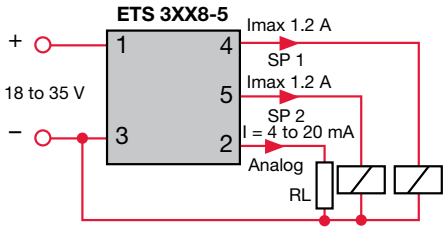

Dimensions

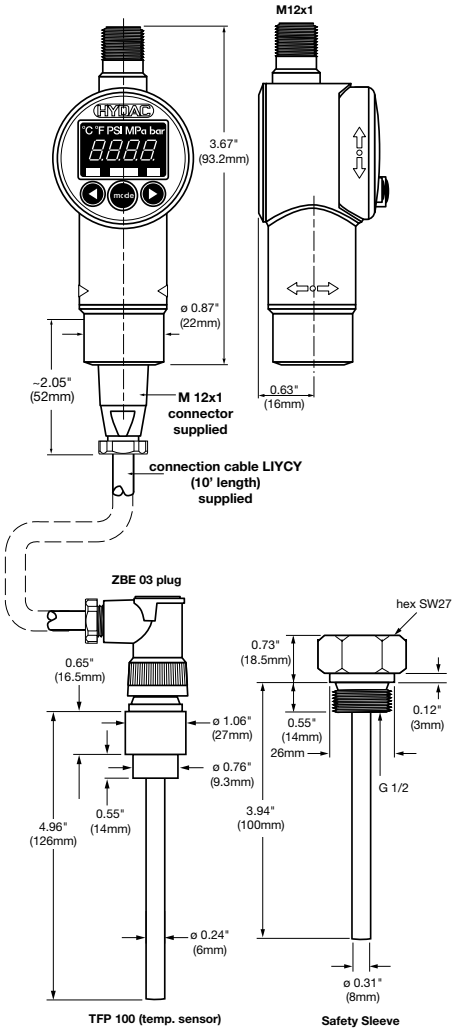

ETS 320 Series

Temperature Switch for Inline and Tank Mounting

Applications

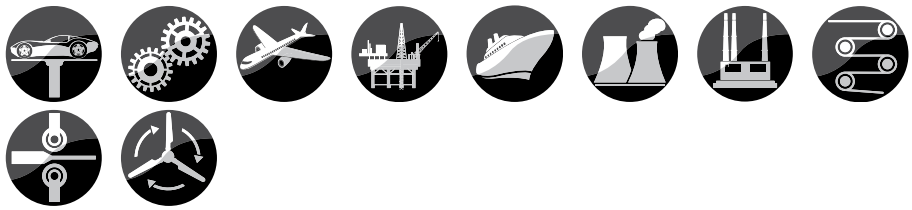

Description

The ETS 320 is a compact electronic temperature switch with a 3-digit digital display.

Pressure resistant to 9000 psi with an integral 18 mm temperature probe, this model can be mounted directly inline or on the hydraulic block and has a measuring range of -10 to 212°C.

Different output models with one or two switching outputs, optionally with an additional analog output signal of 4 to 20 mA, offer a variety of application possibilities.

The switching points and the associated hystereses can be adjusted very quickly and easily using the keypad.

For optimum adaptation to the particular application, the unit has many additional adjustment parameters *(e.g. switching delay times, N/C / N/O function, etc.)*.

Special Features

- Compact temperature switch with integral temperature probe
- 2 transistor switching outputs, up to 1.2 A load per output
- Option: analog output 4 to 20 mA
- 3-digit digital display
- Switching point or window function
- Switching / switch-back points and many useful additional functions can be set using the keypad

Approvals

CE mark is a mandatory conformity mark on many products placed on the single market in the European Economic Area

Technical Details

Sensor Specifications	
Measuring range	-13° to 212°F (-25° to 100°C)
Rated pressure - psi	9000
Mechanical connection	G1/2 A DIN 3852 male
Tightening torque	33 lb-ft (45 Nm)
Parts in contact with media	Stainless steel, FPM seal
Accuracy	≤ ±2°F (1°C)
Temperature drift *(ambient)*	≤ ±0.0085% FS / °F max. zero point ≤ ±0.0085% / °F max. range
Weight	Approximately 300g
Output signal	4 to 20 mA, 2 wire, ohmic resistance max 400 Ω
Switching Specifications	
Type	PNP transistor
Switching current	1.2A per output
Switching cycles	≥ 100 million
Rise time to DIN EN 60751	T50 : 3s T90 : 9s
Environmental Condition	
Operating temperature range	-13° to 176°F (-25° to 80°C)
Storage temperature range	-40° to 176°F (-40° to 80°C)
Media temperature range	-40° to 212°F (-40° to 100°C)
CE mark	EN 61000-6-1 / 2 / 3 / 4
Vibration resistance to DIN EN 60068-2-6 at 0 to 500 Hz	≤ 10g
Environmental protection	IP 65
Electrical Specifications	
Supply voltage	20 to 32 VDC
Residual ripple suppy voltage	≤ 5%
Current consumption	100 mA *(plus switching current)*
Reverse polarity protection of the supply voltage, excess voltage, override and short circuit protection	Standard
Display	7 segment LED display, 3 digits

Model Code

ETS 3 2 X - X - XXX - XXX

Mechanical Connection
2 = G 1/2 A DIN 3852, male with integral sensor

Electrical Connection
6 = M12x1 plug, 4 pole for output codes 2 & 3 *(connector not included)*
8 = M12x1 plug, 5 pole for output code 5 *(connector not included)*

Output
2 = 2 Switching Outputs *(only with electrical connection 6)*
3 = 1 Switching Output with 1 analog output *(only with electrical connection 6)*
5 = 2 Switching Outputs with 1 analog output *(only with electrical connection 8)*

Measuring Range
100 = -13° to 212°F

Modification Number
000 = Standard Display in °C
400 = Standard Display in °F

Pin Connections

M12x1, 4 pole

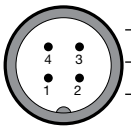

Pin	326-2	326-3
1	$+U_B$	$+U_B$
2	nc	analog
3	0 V	0 V
4	SP 1	SP 1

M12x1, 5 pole

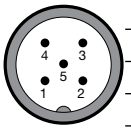

Pin	328-5
1	+UB
2	analog
3	0 V
4	SP 1
5	SP 2

Circuit Diagram

Model ETS 3X6-2
2 switching outputs

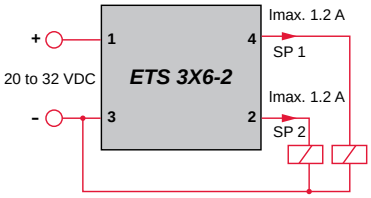

Model ETS 3X6-3
1 switching output,1 analog output

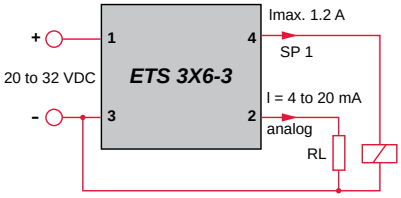

Model ETS 3X8-5
2 switching outputs,1 analog ouput

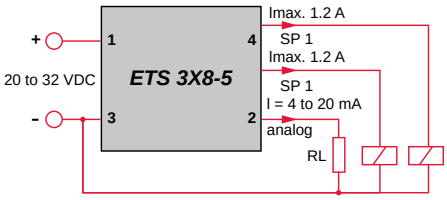

Dimensions

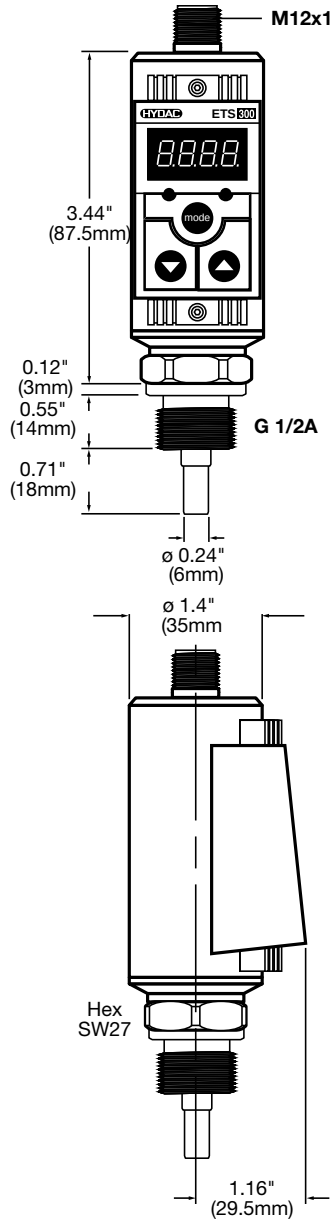

ETS 380 Series

Temperature Switch with Separate Temperature Probe

Applications

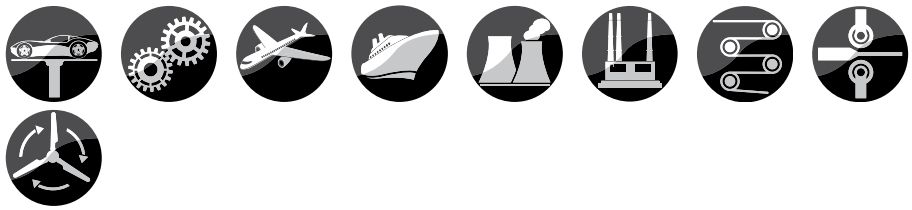

Description

The ETS 380 is a compact electronic temperature switch with a 3-digit digital display.

In the model for separate temperature probe, the measuring range is -20° to 300°F and is used primarily with the temperature probe TFP 100 which was specially developed for tank mounting.

It is also possible, however, to use standard PT 100 temperature probes. Different output models with one or two switching outputs, optionally with an additional analog output signal, offer a variety of application possibilities.

Different output models with one or two switching outputs, optionally with an additional analog output signal of 4 to 20 mA, offer a variety of application possibilities.

The switching points and the associated hystereses can be adjusted very quickly and easily using the keypad.

For optimum adaptation to the particular application, the unit has many additional adjustment parameters *(e.g. switching delay times, N/C / N/O function, etc.)*.

Special Features

- 2 transistor switching outputs, up to 1.2 A load per output
- Option: analog output 4 to 20 mA
- 3-digit digital display
- Switching point or window function
- Switching / reset points and many useful additional functions can be set using the keypad

Approvals

CE mark is a mandatory conformity mark on many products placed on the single market in the European Economic Area

Technical Details

Sensor Specifications	
Measuring range	-20° to 300°F (-30° to 150°C)
Mechanical connection	Cable connection M12x1, 4-pole
Accuracy	≤ ±2°F (1°C)
Temperature drift *(ambient)*	≤ ±0.0085% FS / °F max. zero point ≤ ±0.0085% / °F max. range
Weight	Approximately 300g
Output signal	4 to 20 mA, ohmic resistance max. 400 Ω
External Temperature Sensor Specifications	
Rated Pressure for external sensor *(TFP 100)*	145 psi
Media temperature range	-40° to 257°F (-40° to 125°C)
Electrical connection	M18x1, 4 pole
Safety Sleeve Thermowell	
Parts in contact with medium	Nickel-plated Brass
Switching Specifications	
Type	PNP transistor
Switching current	1.2A per output
Switching cycles	≥ 100 million
Environmental Condition	
Ambient temperature range	-13° to 176°F (-25° to 80°C)
Storage temperature range	-40° to 176°F
CE mark	EN 61000-6-1 / 2 / 3 / 4
Vibration resistance to DIN EN 60068-2-6 at 0 to 500 Hz	≤ 10g
Environmental protection	IP 65
Electrical Specifications	
Supply voltage	20 to 32 VDC
Residual ripple suppy voltage	≤ 5%
Current consumption	100 mA *(plus switching current)*
Reverse polarity protection of the supply voltage, excess voltage, override and short circuit protection	Standard
Display	7 segment LED display, 3 digits

Model Code

ETS 3 8 X - X - XXX - XXX

Mechanical Connection
8 = Electrical connection for external sensor *(TFP 100)*

Electrical Connection
6 = M12x1 plug, 4 pole for output codes 2 & 3 *(connector not included)*
8 = M12x1 plug, 5 pole for output code 5 *(connector not included)*

Output
2 = 2 Switching Outputs *(only with electrical connection 6)*
3 = 1 Switching Output with 1 analog output *(only with electrical connection 6)*
5 = 2 Switching Outputs with 1 analog output *(only with electrical connection 8)*

Measuring Range
150 = -22° to 302°F (-30° to 150°C)

Modification Number
000 = Standard Display in °C
400 = Standard Display in °F

Supplied Accessories: A male connector M12 x1, 4 pole and 3 meter LIYCY 4x0.25 mm² are supplied with the device to connect to external temperature probe

Non-Supplied Accessories: External Sensor (TFP 100) must be used with TFP 100 thermowell.

TFP 100 Part Number: 00904696
TFP 100 Thermowell (Safety Sleeve) Part Number: 00906170

Pin Connections

M12x1, 4 pole

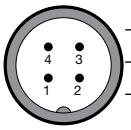

Pin	386-2	386-3
1	$+U_B$	$+U_B$
2	nc	Analog
3	0 V	0 V
4	SP 1	SP 1

M12x1, 5 pole

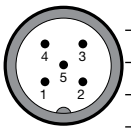

Pin	388-5
1	+UB
2	Analog
3	0 V
4	SP 1
5	SP 2

Dimensions

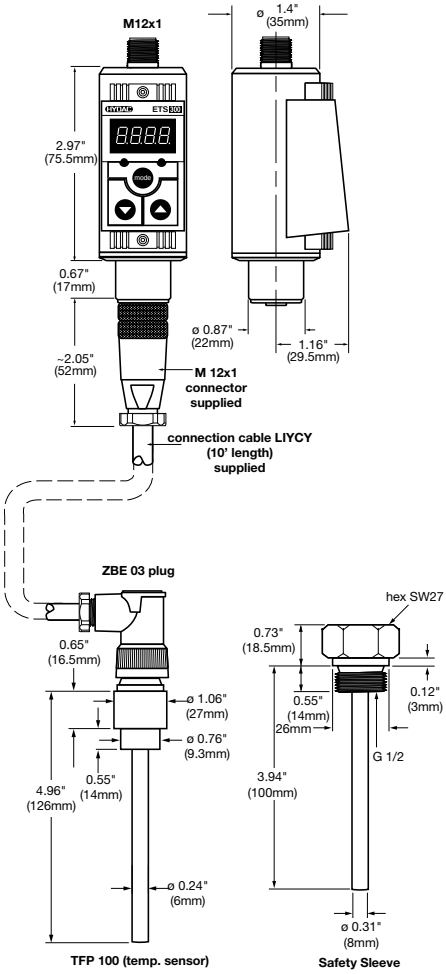

ETS 1700 Series

Temperature Switch with Display

Applications

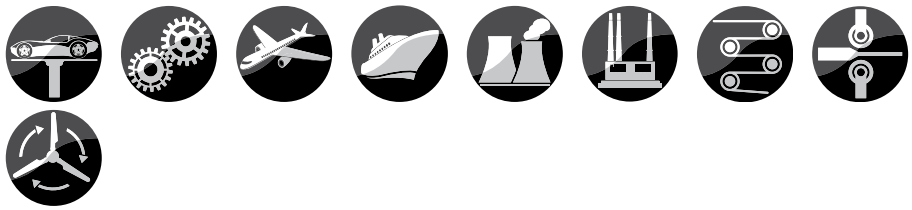

Description

The electronic temperature switch ETS 1700 is used mainly together with the temperature probe TFP 100, which was specially developed for tank mounting.

The 4-digit display can indicate the actual temperature, one of the switching points or the maximum temperature.

The maximum temperature indicates the highest temperature which has occurred since the unit was switched on or was last reset.

The 4 switching outputs can be used to control heating and cooling processes in hydraulic systems, for example.

These 4 switching and switch-back points which are independent of each other can be adjusted very simply via the keypad.

For incorporation into monitoring systems (e.g. with PLC) an analog output (4 to 20 mA or 0 to 10 V) is also available.

Special Features:

- 4-digit digital display
- Simple operation with key programming
- 4 limit relays, switching points and reset points can be adjusted independently
- Analog output signal selectable (4 to 20 mA or 0 to 10 V)
- Many useful additional functions
- Optional mounting position *(pressure connection on the top/bottom, keypad and display can be turned through 180°)*

Approvals

CE mark is a mandatory conformity mark on many products placed on the single market in the European Economic Area

Technical Details

Sensor Specifications	
Measuring ranges	32° to 212°F (0 to 100°C)
Accuracy	≤ ±2°F (1°C)
Temperature drift	≤ ±0.017% / °F max. zero point ≤ ±0.017% / °F max. range
Weight	Approximately 800 g
Output signal	4 to 20 mA, ohmic resistance max. 400 Ω 0 to 10 VDC, ohmic resistance min. 2 kΩ corresponds in each case to 0 to 100°C
External Temperature Sensor Specifications	
Rated Pressure for external sensor *(TFP 100)*	145 psi
Media temperature range	-40° to 257°F
Electrical connection	M18x1, 4 pole
Safety Sleeve Thermowell	
Parts in contact with medium	Nickel-plated Brass
Switching Specifications	
Type	4 relays with change-over contacts in 2 groups *(common supply of each group connected)*
Switching voltage	100mV to 250 V (AC or DC)
Switching current	0.009 to 2A
Switching power	400VA, 50 W *(for inductive load use varistors)*
Set point range	1.5 to 100% FS
Reset point range	1 to 99% FS
Switching cycles	> 20 million at minimum load > 1 million at maximum load
Environmental Condition	
Operating temperature range	-13° to 140°F (-25° to 60°C)
Storage temperature range	-40° to 176°F (-40 to 80°C)
CE mark	EN 61000-6-1 / 2 / 3 / 4
Vibration resistance to DIN EN 60068-2-6 at 0 to 500 Hz	≤ 5g
Environmental protection	IP 65
Electrical Specifications	
Supply voltage	22 to 32 VDC
Residual ripple suppy voltage	≤ 10%
Current consumption	approximately 200 mA
Electrical connection	14 pole terminal block
Reverse polarity protection of the supply voltage, excess voltage, override and short circuit protection	Standard
Display	7 segment LED display, 4 digits, 13 mm high

Model Code

ETS 170 XX - X - 000

Display
01 = 4 digit °C
02 = 4 digit °F

Measuring Range
100 = -13° to 212°F (0° to 100°C)

Modification Number
000 = Standard

cable glands, mounting screw, a 5 pole female connector (Binder series 681) for connecting the separate temperature probe and a 10' sensor cable (LIYCY 4x0.25 mm²) are supplied with the unit.
Other accessories, such as vibration mounts, etc. can be found in the Accessories section.

Pin Connections

Device Connection

Pin	
1	$+U_B$
2	0 V
3	Analog output signal +
4	Analog output signal - (0 V)
5	Relay 1 N/C
6	Relay 1 N/O
7	Center relay 1 and 2
8	Relay 2 N/C
9	Relay 2 N/O
10	Relay 3 N/C
11	Relay 3 N/O
12	Center relay 3 and 4
13	Relay 4 N/C
14	Relay 4 N/O

Dimensions

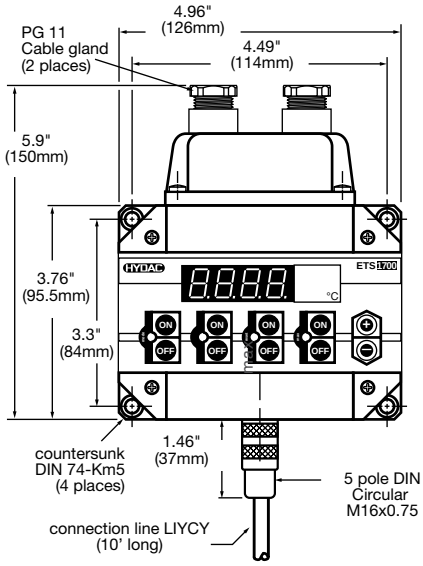

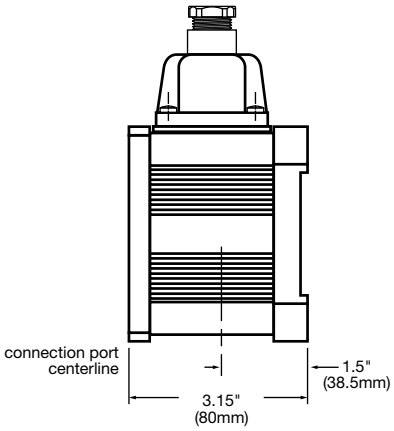

Plug Connection

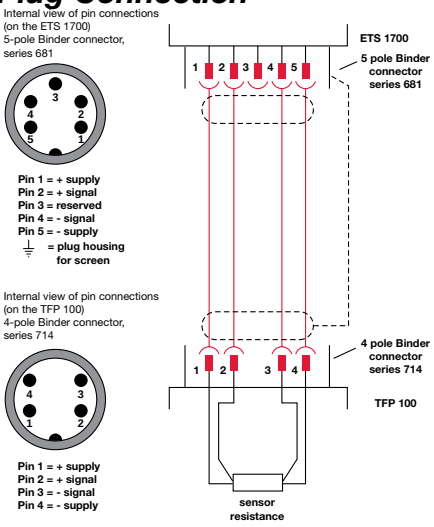

TFP 100

External Sensor (TFP 100) must be used with TFP 100 thermowell.
TFP 100 Part Number: 00904696
TFP 100 Thermowell (Safety Sleeve) Part Number: 00906170

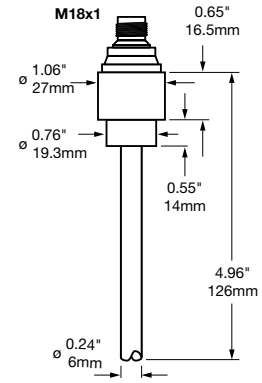

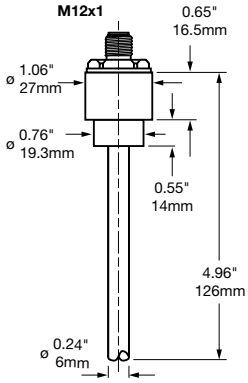

Safety Sleeve

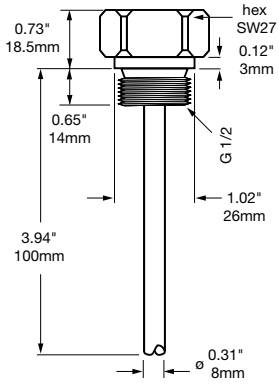

ENS 3000 Series
Electronic Level Sensor

Applications

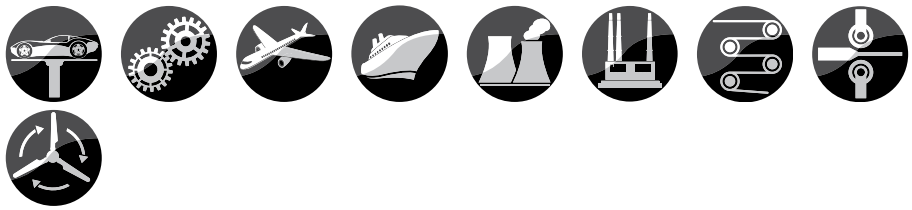

Description

The ENS 3000 is an electronic level switch with integral display. The unit has either 1, 2 or 4 switching outputs and 1 or 2 analog output signals are cavitation as an option.

In addition to the standard minimum and maximum switching signals, it is possible with the 4 output version to set additional warning signals to prevent problems such as tank overflow or aeration of the pump.

The ENS 3000 can be used for oil as well as water. The fluid type can be selected via the menu for specific applications.

The main applications of the ENS 3000 are primarily in hydraulics, e.g. for fluid level monitoring of a tank.

The ENS 3000 is available in standard probe lengths of 9.84”, 16.2”, 20.5” and 28.7”.

The unit is also available with or without an integrated temperature sensor.

Special Features

- 1, 2 or 4 independent PNP transistor switching outputs
- Selectable for use with oil or water
- User-selectable switch outputs based on the measured value
- Switching and switch-back points can be adjusted independently
- Selectable analog output *(4 to 20 mA or 0 to 10 VDC)*
- 4-digit digital display
- Simple to operate due to menu-based keypad operation

Approvals

CE mark is a mandatory conformity mark on many products placed on the single market in the European Economic Area

Technical Details

Sensor Specifications				
Sensor type	capacitive fluid level sensor			
Parts in contact with media	Ceramic			
Probe length	9.80”	16.20”	20.50”	28.70”
Active zone	6.70”	10.20”	14.20”	23.20”
Inactive zone	3.10”	5.95”	6.35”	5.50”
Max speed of change in fluid level	1.57”/s	2.36”/s	3.15”/s	3.94”/s
Weight	approx. 135 g			
Output signal with 1 or 2 switching outputs	4 to 20 mA ohmic resistance max. 400 Ω 0 to 10 VDC ohmic resistance min 2 kΩ			
Ouput signal with 4 switching outputs	0 to 10 VDC ohmic resistance min 2 kΩ			
Temperature Sensor Specifications				
Sensor type	semiconductor sensor			
Measuring range	-13° to 212°F			
Accuracy	± 3.0°F (1.5°C)			
Reaction time (t90)	180 s			
Switching Specifications				
Type	PNP transistor output Programmable as N/O or N/C			
Repeatability	≤ ±2% FS max.			
Switching current	1 Switch Point 2 Switch Points 4 Switch Points		1.2A 1.2A each 0.25A each	
Set point range	1.5 to 100% FS			
Reset point range	1 to 99% FS			
Switching cycles	≥ 100 million			
Environmental Condition				
Compensated temperature range	32° to 140°F (0° to 60°C)			
Operating temperature range	32° to 140°F (0° to 60°C)			
Storage temperature range	-40° to 176°F (-40° to 80°C)			
Media temperature range	32° to 140°F (0° to 60°C)			
CE mark	EN 61000-6-1 / 2 / 3 / 4			
c UL us mark *(Environmental conditions to 1.4.2 UL 61010-1; C22.2 No. 61010-1)*	Certificate no. E318391			
Vibration resistance to DIN EN 60068-2-6 at 10 to 500 Hz	≤ 5g			
Environmental protection	IP 67			
Maximum tank pressure	7 psi (temporary 40 psi, t < 1 min)			
Electrical Specifications				
Supply voltage -limited energy- *according to:*	9 to 35 VDC without analog output 18 to 35 VDC with analog output *9.3 UL 61010; Class 2; UL 1310/1585; LPS UL 60950*			
Residual ripple suppy voltage	≤ 5%			
Current consumption	max. 2.455 A total max. 35 mA with inactive switching outputs max. 55 mA with analog output and inactive switching outputs			
Reverse polarity protection of the supply voltage, excess voltage, override and short circuit protection	Standard			
Display	7 segment LED display, 4 digits			

Model Code

ENS 3 X 1 X - X - XXXX - 400 K

Temperature Sensor Type
1 = with integral temperature sensor
2 = without integral temperature sensor

Mechanical Connection
1 = 22mm diameter collar to fit cutting ring coupling ZBE 19 or ZBE 20

Electrical Connection
6 = M12x1 plug, 4 pole for output codes 2 & 3 *(connector not included)*
8 = M12x1 plug, 5 pole for output code 5 *(connector not included)*
P = M12x1 plug, 8 pole for output code 8 *(connector not included)*

Output
2 = 2 Switching Outputs *(only with electrical connection 6)*
3 = 1 Switching Output with 1 analog output *(4-20mA or 0-10 V) (only with electrical connection 6)*
5 = 2 Switching Outputs with 1 analog output *(4-20mA or 0-10 V) (only with electrical connection 8)*
8 = 4 Switching Outputs with 2 analog outputs *(0-10 V only) (only with electrical connection P)*

Probe Length
0100 = 9.84” (250mm)
0162 = 16.2” (410mm)
0205 = 20.5” (520mm)
0287 = 28.7” (730mm)

Modification Number
400 = USA Standard

Probe Type
K = Ceramic

Pin Connections

M12x1, 4 pole

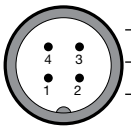

Pin	3X16-2	3X16-3
1	$+U_B$	$+U_B$
2	SP 2	Analog
3	0 V	0 V
4	SP 1	SP 1

M12x1, 5 pole

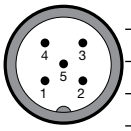

Pin	3X18-5
1	$+U_B$
2	Analog
3	0 V
4	SP 1
5	SP 2

M12x1, 8 pole

Pin	3X1P-8
1	$+U_B$
2	SP 2
3	0 V
4	SP 1
5	SP 3
6	SP 4
7	Analog fluid level
8	Analog temperature

Circuit Diagram

ENS 3X16-2

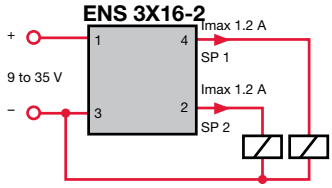

ENS 3X18-5

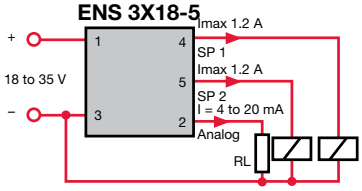

ENS 3X16-3

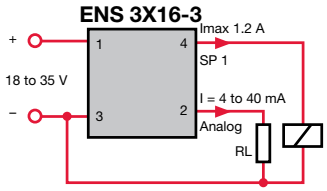

ENS 3X1P-8

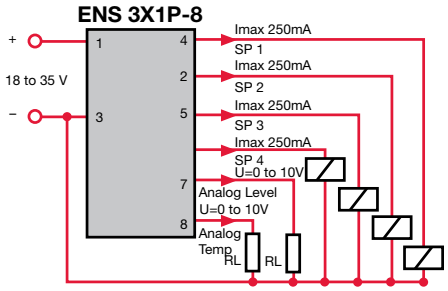

Adapters

ZBM 19
P/N 00908738
Fits min. 1 1/8” tank hole
(see page 141)

ZBM 20
P/N 00908739
G3/4 BSPP
(see page 141)

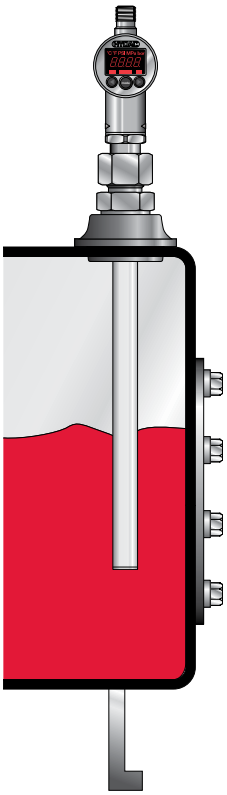

Dimensions

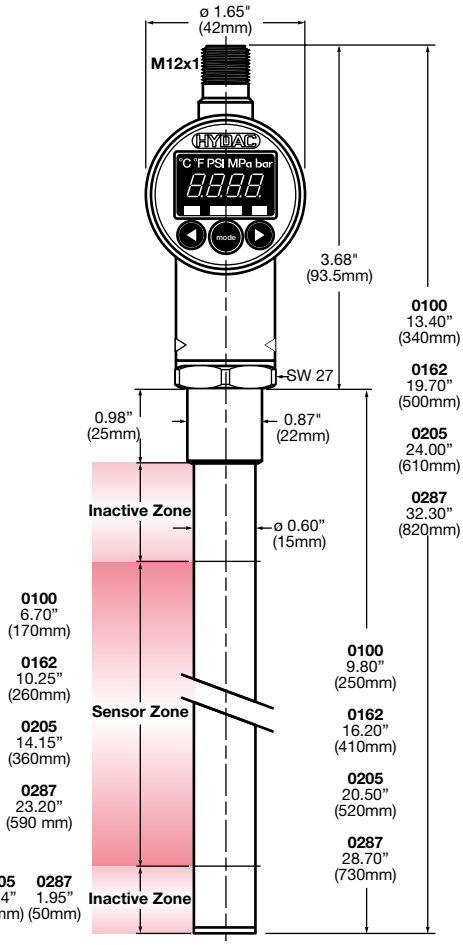

EVS 3100 Series
Flow Rate Sensor

Applications

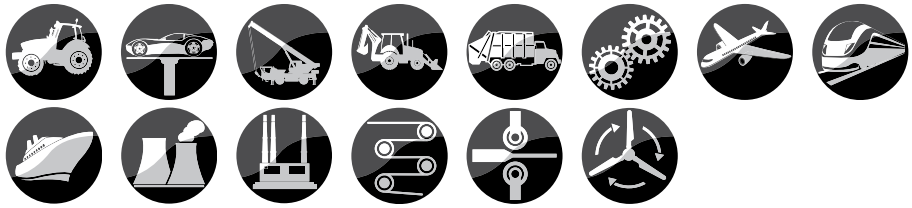

Description

The flow rate transmitters in the series EVS 3100 *(aluminum range)* are specially designed for use in hydraulic and other fluid technology systems.

They operate according to the turbine principle, i.e. the speed of an impeller turning in the fluid flow is measured and converted into a 4 to 20 mA analogue signal.

Two further G1/4 threaded holes in the turbine housing provide connections for additional units, e.g. temperature and pressure transmitters.

Special Features

- Pressure resistant to 400 bar *(depending on model)*
- Viscosities of 1 to 100 cSt
- Output signal 4 to 20 mA
- Additional connection of temperature and / or pressure transmitters possible

Approvals

CE mark is a mandatory conformity mark on many products placed on the single market in the European Economic Area

Technical Details

Housing material - EVS 3100 EVS 3110	Aluminum Stainless Steel
Measurement medium - EVS 3100 EVS 3110	Hydraulic oils* Water based fluids*
Supply voltage	10 to 32 V DC
Residual ripple of supply voltage	≤ 5%
Signal output, permitted resistance	4 to 20 mA, 2 wire $R_{Lmax} = (u_B - 10\ V) / 20\ mA\ [k\Omega]$
CE mark	EN 61000-6-1 / 2 / 3 / 4
Compensated temperature range	-4° to 158°F (-20° to 70°C)
Operating temperature	-4° to 158°F (-20° to 70°C)
Media temperature range	-4° to 194°F (-20° to 90°C)
Storage temperature	-40° to 212°F(-40° to 100°C)
Permissible viscosity range	1 to 100 cSt
Calibrated at - EVS 3100 EVS 3110	30 cSt 5 cSt
Accuracy class	≤ ±2% of the instantaneous value
Measuring ranges / Operating pressure EVS 31XX-A-0020-000 EVS 31XX-A-0060-000 EVS 31XX-A-0300-000 EVS 31XX-A-0600-000	 0.26 to 5.28 gpm / 5800psi 1.59 to 15.9 gpm / 5800 psi 3.96 to 79.3 gpm / 5800 psi 10.6 to 159 gpm / 4567 psi *(5800 psi max for EVS 3110)*
Protection class to DIN 40050	IP 65 *(Binder 714 M18)* IP 67 *(M12x1, with ZBE 08 molded cable)*
Mechanical connection/ Torque rating EVS 31XX-A-0020-000 EVS 31XX-A-0060-000 EVS 31XX-A-0300-000 EVS 31XX-A-0600-000	 G1/4 female thread / approx. 44 lb-ft (60 Nm) G1/2 female thread / approx. 95 lb-ft (130 Nm) G1 1/4 female thread / approx. 370 lb-ft (500 Nm) G1 1/2 female thread / approx. 440 lb-ft (600 Nm)
Additional connections on housing	2 x G 1/4 female ports for pressure or temperature sensors

*other fluids on request
**other ranges on request

Model Code

EVS 3 1 X X - A - XXXX - 000

Housing Material
0 = Aluminum *(for hydraulic oils)*
1 = Steel *(for water based fluids)*

Electrical Connection
4 = 4 pole Binder series 714 M18 *(connector not supplied)*
6 = M12x1, 4 pole *(connector not supplied)*

Signal
A = 4 to 20 mA, 2 conductor

Measuring Range
0020 = 0.26 to 5.28 gpm
0060 = 1.59 to 15.9 gpm
0300 = 3.96 to 79.3 gpm
0600 = 10.6 to 159 gpm

Modification Number
000 = Standard
SAE 37 = SAE 37 Thread using an adapter *(this adapter handles up to 2000 psi)*

Note: On units with a different modification number, please read the label or the technical amendment details supplied with the unit.

Accessories: Appropriate accessories, such as electrical connectors, can be found in the Accessories section.

Pin Connections

Binder 714 M18

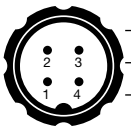

Pin	31X4-A
1	nc
2	Signal +
3	Signal -
4	nc

M12x1, 4 pole

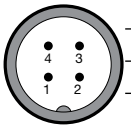

Pin	31X6-A
1	Signal +
2	nc
3	Signal -
4	nc

Dimensions

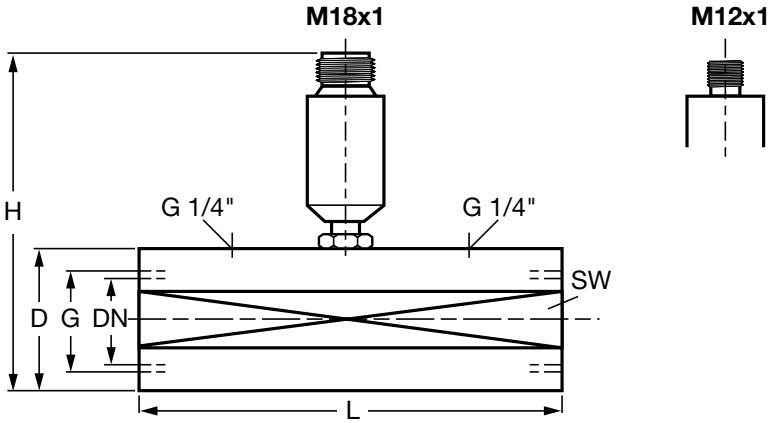

Model	Measuring Range gpm	Material	L	H	D / SW*	G	DN	P_{max} in psi	T_{max}
EVS 310X-A-0020	0.26 to 5.28	AL/SS	4.61”	5.31”	1.85” / 1.81”	G 1/4	0.28”	5800	-4° to 194°F
EVS 310X-A-0060	1.59 to 15.9	AL/SS	5.67”	5.31”	1.91” / 1.81”	G 1/2	0.43”	5800	-4° to 194°F
EVS 310X-A-0300	3.96 to 79.3	AL/SS	6.10”	5.91”	2.50” / 2.36”	G 1 1/4	0.87”	5800	-4° to 194°F
EVS 310X-A-0600	10.6 to 159	AL/SS	7.13”	5.91”	2.50” / 2.36”	G 1 1/2	1.81”	4565(A) 5800(S)	-4° to 194°F

HDA 5500 Series
Intelligent Display Unit

Applications

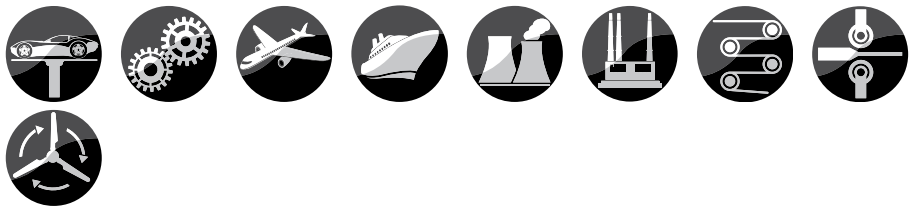

Description

The digital display units in the series HDA 5500 are microprocessor controlled display and monitoring units designed for control panel mounting. Different versions are available with a maximum of 3 analog inputs, an analog output (4 to 20 mA or 0 to 10 V) and up to 4 relay outputs.

The analog input signals are displayed according to the settings selected by the user. Each of the 4 relay outputs can be allocated to each of the 1 to 3 sensor inputs and to the differential between input 1 and 2.

A PT100 temperature probe can be connected directly to the unit. There is also an option for frequency measurement using the HDS 1000 *(HYDAC rpm probe)*, for example to measure the speed of rotating components.

Depending on the model, it is also possible to connect SMART sensors *(condition monitoring sensors)*. SMART sensors are a new generation of sensors from HYDAC, which can provide a variety of different measurement values.

Special Features

- Digital display of analog signals
- Clear 4-digit, 7-segment LED display
- Up to 3 analog inputs (4 to 20 mA, 0 to 10 V or 0 to 5 V)
- Accuracy ≤ ±0.5%
- Differential measurement possible
- Analog output (4 to 20 mA or 0 to 10 V)
- Up to 4 relay switching outputs
- RS 232 interface
- Voltage supply 12 to 32 V DC or 85 to 265 V AC 50 / 60 Hz
- Option for PT100 sensor input or frequency input

Approvals

CE mark is a mandatory conformity mark on many products placed on the single market in the European Economic Area

Technical Details

Display Specifications		
Display	7 segment LED display, 4 digits, 0.55” high 3 LED for measuring range 4 LED for switch points	
Range of display	-999 to 9999 *(adjustable)*	
Display units with background lighting	bar, kg/cm_, Mpa, psi, °C, °F, L/min, mA, V, Hz, kN, m, mm, L, gal, gal/min, 1/min	
Weight	320g	
Input Specifications		
Analog signal input	Measuring Range	4 to 20 mA 0 to 5V 0 to 10V
	Accuracy	≤ ±0.5% at 77°F
PT 100 input	Measuring Range	-13° to 212°F (-25 to 100°C)
	Accuracy	≤ ±0.5% at 77°F
Frequency / counter input	Signal Threshold	0 to 0.6V = LOW 3 to 24V = HIGH
	Frequency Range	15Hz to 4kHz
Output Specifications		
Type	2 or 4 relays with isolated common	
Switching voltage	100mV to 250 VAC	
Switching current	9 mA to 2A	
Contact rating	400 VA, 50 W *(use varistors with inductive load)*	
Set point range	1.5 to 100% FS	
Reset point range	0.5 to 99% FS	
Life expectancy of switch contacts	≥ 20 million cycles at minimum load ≥ 1 million cycles at maximum load	
Reaction time	approx. 20 ms *(with switch delay = 0 ms)*	
Interface	Serial interface RS 232 Baud rate 19200 - 8 data bits 1 start and stop bit - no parity, no hand shake	
Output signal	4 to 20 mA, ≤ 400 ohm 0 to 10 VDC, ≥ 2 Kohm	
Environmental Condition		
Norminal temperature range	32° to 122°F (0 to 50°C)	
Operating temperature range	32° to 122°F (0° to 50°C)	
Storage temperature range	-40° to 176°F (-40° to 80°C)	
CE mark	EN 61000-6-1 / 2 / 3 / 4	
Environmental protection	IP 20	
Electrical Specifications		
Supply voltage	85 to 265 VAC (50 / 60 Hz) 12 to 32 VDC	
Reverse polarity protection of the supply voltage, excess voltage, override and short circuit protection	Standard	
Connection terminals	Supply Voltage	terminal block, 2 pole, 2.5mm²
	Input/output	terminal block, 11 pole, 2.5mm²
	Relays	2 terminal blocks, 5 pole, 2.5mm²

Model Code

HDA 5500 - X - X - XX - 000

Inputs
0 = 1 analog input
1 = 3 analog inputs
2 = 1 analog + 1 frequency / Count function
3 = 1 analog + PT 100 - input

Outputs
0 = without relay option
1 = 2 relay outputs
2 = 4 relay outputs

Supply Voltage
AC = 85 to 265 VAC
DC = 12 to 32 VDC

Modification Number
000 = standard

Input Variations

Analog Signal	HDA 5500-0
Analog Signal Analog Signal Analog Signal	HDA 5500-1
Analog Signal and Frequency Signal	HDA 5500-2
Analog Signal and PT 100 Temperature Signal	HDA 5500-3

Ouput Variations

HDA 5500-X-0	Analog Output
HDA 5500-X-1	Relay-Switching Output 1 Relay-Switching Output 2 Analog Output
HDA 5500-X-2	Relay-Switching Output 1 Relay-Switching Output 2 Relay-Switching Output 3 Relay-Switching Output 4 Analog Output

Dimensions

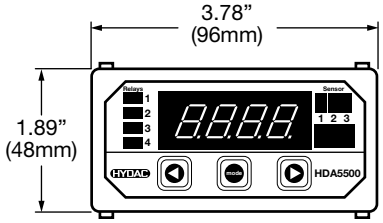

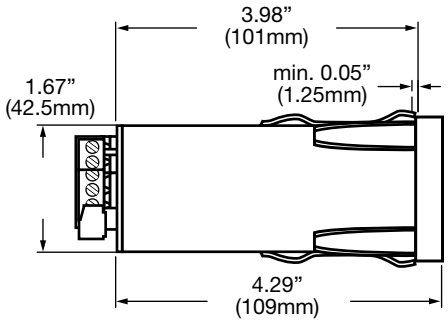

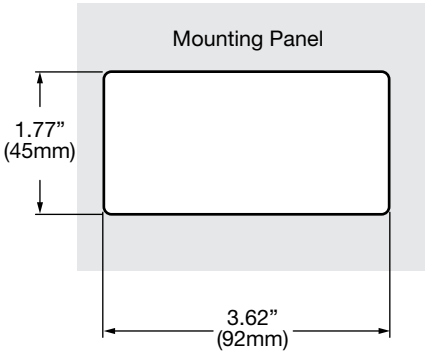

Protection Cover

Part #02701890
Purchase separately

HMG 500 Series
Hand Held Diagnostic Tool

Applications

Description

The HMG 500 is a hand-held diagnostic tool for simple measuring tasks on hydraulic and pneumatic systems. Typical applications are in analysis, maintenance and service.

The HMG 500 has two analog input channels and can record the signals from HYDAC HSI sensors which are connected to it. HSI sensors *(HYDAC Sensor Interface)* are HYDAC sensors for pressure, temperature, and flow rate with automatic sensor recognition.

The HMG 500 automatically reads the measuring range and unit from each sensor that is connected. Manual adjustments of the measuring range settings are no longer required.

The measured values, actual, minimum and maximum, are recorded from the sensors. Depending on the requirement and setting, the following are displayed: the actual measured values *(channel A, B)*, the minimum or the maximum values *(channel A, B)*. The min/max values can be reset at any time at the touch of a button.

Furthermore the HMG 500 is capable of measuring and displaying the differential between the values on channel A and B *(channel A - B)*.

HMG 500 Kit #1: Part #00909470

Includes:

- HMG 500-000
- HDA 4748-H-0600-000
- ZBE 30-02 *(cable M12x1 for HMG)* 6'
- Gauge Adapter G1/4 female to Testpoint 16x2
- Case for HMG 500

HMG 500 Kit #2: Part #00909471

Includes:

- HMG 500-000
- 2 pcs. HDA 4748-H-0600-000
- 2 pcs. ZBE 30-02 *(cable M12x1 for HMG)* 6'
- 2 pcs. Gauge Adapter G1/4 female to Testpoint 16x2
- Case for HMG 500

Technical Specifications

Sensor inputs:
The HMG 500 has two analog inputs on 2 input connections *(channels A and B)* for connecting HSI sensors with automatic sensor recognition *(pressure, temperature and flow rate transmitters)*.

Channel A and B:

- Automatic sensor recognition for HSI sensors *(pressure, temperature and flow rate transmitters)* and setting of measuring range and unit of measurement
- Measured value differential for channel A - B

Measurement accuracy of the input channels:

- ≤±0.1% of the measuring range

Measurement rate:

- 0.1 ms

Measurement & Display:

- Actual measured value
- Min/max values
- Measured value differential
- Change of the unit of measurement

Operating time using 9V battery (2 sensors):

- approx. 10 hours.

General Specifications

Items supplied:

- HMG 500
- Manual D/E/F
- 9 V battery

Dimensions: 3.94 x 6.69 x 1.57 in.

Weight: 0.90 lbs.

Operating/Operating Conditions
Operating temperature: 41° to 140°F (5° to 60°C)
Storage temperature: -40° to 158°F (-40° to 70°C)
Rel. humidity: 0 to 70 %

Power Supply
A standard 9 V battery is required for operation. It is also possible to operate the unit using the AC mains adaptor plug listed under Accessories.

CE mark
EN 610000-6-1 / 2 / 3 / 4

Special Features

Adjustment function for mechanical pressure switches

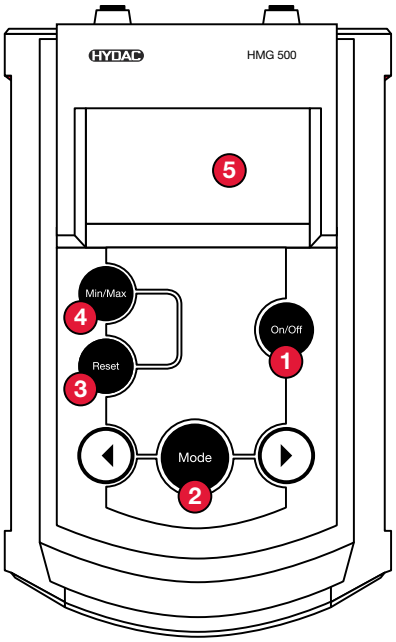

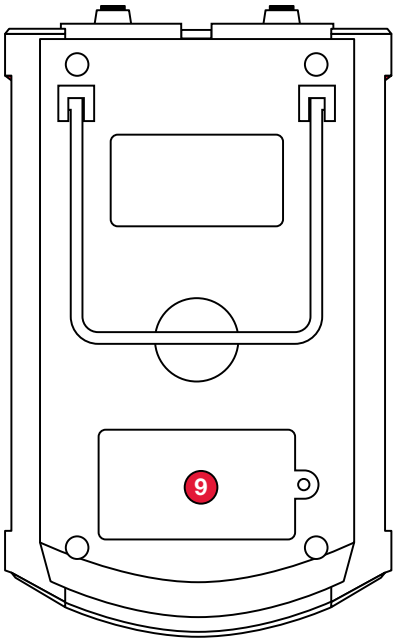

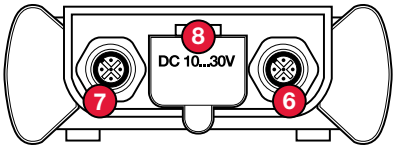

Display Panel & Connections

1. **On/Off button**
2. **Mode**
   Adjusting the menus
3. **Reset**
   Resetting the min/max values
4. **Min/Max**
   Display of the minimum and maximum values
5. **Display**
6. **Sensor Input Connector** (Channel A)
7. **Sensor Input Connector** (Channel B)
8. **Protective Cover**
   Connection for AC adaptor
9. **Battery Compartment**

Diagnostic Unit

Model Code	Description	Part No.
HMG 500-000-E	Includes: • HMG 500-000-E with Manual • 9V Battery	00909101

Pressure Transducer with HSI

(HYDAC Sensor Interface)

Model Code	Description	Part No.
HDA 4748-H-0009-000	-14.5 to 130.5 psi (-1 to 9 bar)	00909429
HDA 4748-H-0016-000	0 to 230 psi (0 to 16 bar)	00909425
HDA 4748-H-0060-000	0 to 870 psi (0 to 60 bar)	00909554
HDA 4748-H-0100-000	0 to 1450 psi (0 to 100 bar)	00909426
HDA 4748-H-0250-000	0 to 3625 psi (0 to 250 bar)	00909337
HDA 4748-H-0400-000	0 to 5800 psi (0 to 400 bar)	00909427
HDA 4748-H-0600-000	0 to 8700 psi (0 to 600 bar)	00909428
HDA 4778-H-0135-000	-14.5 to 135.5 psi (-1 to 9.34 bar)	00920755
HDA 4778-H-0150-000	0 to 150 psi (0 to 10 bar)	00920663
HDA 4778-H-1500-000	0 to 1500 psi (0 to 103 bar)	00920757
HDA 4778-H-3000-000	0 to 3000 psi (0 to 207 bar)	00920756
HDA 4778-H-6000-000	0 to 6000 psi (0 to 144 bar)	00920664
HDA 4778-H-9000-000	0 to 9000 psi (0 to 621 bar)	00920665

Temperature Transducer with HSI

(HYDAC Sensor Interface)

Model Code	Description	Part No.
ETS 4548-H-000	-13° to 212°F (-25° to 100°C)	00909298
ETS 4578-H-000	-13° to 212°F (-25° to 100°C)	00920662

Flow Sensor with HSI *(HYDAC Sensor Interface)*

Model Code	Description - g/min (l/min)	Part No.
Aluminum		
EVS 3108-H-0020-000	0.26 to 5.28 (1.2 to 20)	00909405
EVS 3108-H-0060-000	1.59 to 15.9 (6 to 60)	00909293
EVS 3108-H-0300-000	3.96 to 79.3 (15 to 300)	00909404
EVS 3108-H-0600-000	10.6 to 159 (40 to 600)	00909403
Stainless Steel		
EVS 3118-H-0020-000	0.26 to 5.28 (1.2 to 20)	00909409
EVS 3118-H-0060-000	1.59 to 15.9 (6 to 60)	00909406
EVS 3118-H-0300-000	3.96 to 79.3 (15 to 300)	00909408
EVS 3118-H-0600-000	10.6 to 159 (40 to 600)	00909407

Accessories

Model Code	Description	Part No.
ZBE 30-02	cable for M12x1 - 6’	06040851
ZBE 30-05	cable for M12x1 - 15’	06040852
Plastic Case	for HMG 500 and accessories	06043006
Power Supply	DC Charging unit for HMG 500	02702416

HMG 510 Series
Hand-Held Diagnostic Tool

Description

The HMG 510 is a hand-held diagnostic tool for simple measurement tasks on hydraulic and pneumatic systems. Typical applications are primarily to be found in analysis, maintenance and servicing.

The HMG 510 features two analog inputs. HSI sensors *(HYDAC Sensor Interface)* or SMART sensors can be connected to these inputs. HSI sensors are HYDAC sensors featuring automatic sensor recognition. Consequently, manual adjustments of the measurement range settings are no longer required.

Furthermore the HMG 510 is capable of measuring and displaying the differential between the values on channel A and B (channel A–B), providing two sensors featuring the same unit of measurement are connected.

In addition to this, the HMG 510 enables measured values which have been saved in the SMART sensors to be uploaded to a PC.

With the aid of the HYDAC PC software CMWIN, the measurement data stored in the SMART sensors can be displayed on a PC screen in the form of a graph then analysed, edited and saved. The HMG 510 has a standard built-in USB port to enable this data transfer. To further extend the applications range, the HMG 510 has a function for setting mechanical pressure and temperature switches precisely and reliably.

Special Features

Adjustment function for mechanical pressure switches

Applications

Technical Specifications

Sensor inputs:
The HMG 510 features two analog inputs with automatic sensor detection at 2 input jacks *(channels A and B)*. Only HSI sensors *(pressure, temperature and flow rate transmitters)* and SMART sensors *(rel. humidity/temperature - AS1000, rel. humidity/temperature/dielectric constant - HLB 1300)* can be connected. **Channel A and B:**

- Automatic sensor recognition for HSI and SMART sensors; automatic setting of the measurement range and unit of measurement
- Measured value differential for channel A - B

Measurement accuracy of the input channels:

- ≤ +0.1% of the measurement range

Measurement rate:

- 0.1 ms

Measurement & Display:

- Current measured value
- Min/max values
- Measured value differential
- Change of the unit of measurement

Operating time using 9 V battery (2 sensors):

- approx. 10 hours

Standards with Which the HMG 510 Complies

- EMC: EN 61000-6-1 / 2 / 3 / 4
- Safety: EN 61010
- Protection rating: IP 54

General Specifications

Items supplied:

- HMG 510
- Manual Ger/Eng/Fra
- 9 V battery
- USB cable
- Y adapter, blue *(for HLB 1000)*
- Y adapter, yellow *(for CS 1000)*
- Sensor cable M12x1 (6')
- CD-ROM with CMWIN software
- Case for HMG 510

Dimensions: 3.94 x 6.69 x 1.57 in.

Weight: 090 lbs.

Operating/Ambient Conditions
Operating temperature: 41° to 140°F (5° to 60°C)
Storage temperature: -40° to 158°F (-40° to 70°C)
Rel. humidity: 0 to 70 %

Power Supply
A standard 9V battery is sufficient for operation. The unit can also be operated using the AC mains adaptor plug listed under Accessories. If you have any questions, suggestions, or encounter any problems of a technical nature, please contact your HYDAC sales office.

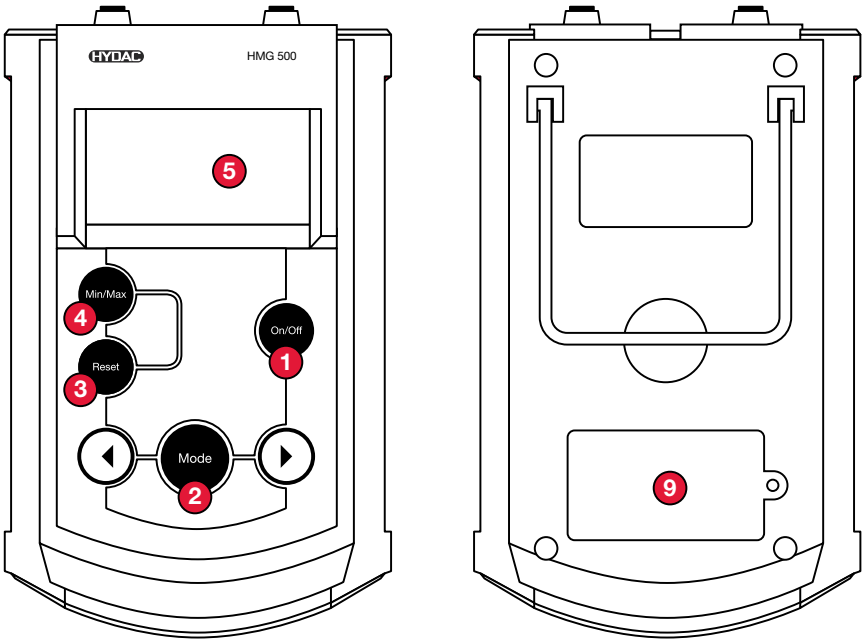

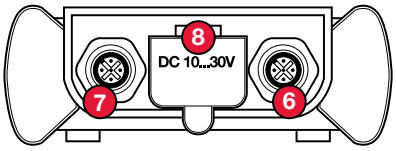

Display Panel & Connections

1. **On/Off button**
2. **Mode**
   Adjusting the menus
3. **Reset**
   Resetting the min/max values
4. **Min/Max**
   Display of the minimum and maximum values
5. **Display**
6. **Sensor Input Connector** (Channel A)
7. **Sensor Input Connector** (Channel B)
8. **Protective Cover**
   Connection for AC adaptor and mini USB connection
9. **Battery Compartment**

Diagnostic Unit

Model Code	Description	Part No.
HMG 510-000-E	Includes: • HMG 510-000-E with Manual • 9V Battery • USB cable • Y adapter, blue *(for HLB 1000)* • Y adapter, yellow *(for CS 1000)* • Sensor cable M12x1 (6') • CD w/ CMWIN software • Case for HMG 510	00909101

Pressure Transducer with HSI

(HYDAC Sensor Interface)

Model Code	Description	Part No.
HDA 4748-H-0009-000	-14.5 to 130.5 psi (-1 to 9 bar)	00909429
HDA 4748-H-0016-000	0 to 230 psi (0 to 16 bar)	00909425
HDA 4748-H-0060-000	0 to 870 psi (0 to 60 bar)	00909554
HDA 4748-H-0100-000	0 to 1450 psi (0 to 100 bar)	00909426
HDA 4748-H-0250-000	0 to 3625 psi (0 to 250 bar)	00909337
HDA 4748-H-0400-000	0 to 5800 psi (0 to 400 bar)	00909427
HDA 4748-H-0600-000	0 to 8700 psi (0 to 600 bar)	00909428
HDA 4778-H-0135-000	-14.5 to 135.5 psi (-1 to 9.34 bar)	00920755
HDA 4778-H-0150-000	0 to 150 psi (0 to 10 bar)	00920663
HDA 4778-H-1500-000	0 to 1500 psi (0 to 103 bar)	00920757
HDA 4778-H-3000-000	0 to 3000 psi (0 to 207 bar)	00920756
HDA 4778-H-6000-000	0 to 6000 psi (0 to 144 bar)	00920664
HDA 4778-H-9000-000	0 to 9000 psi (0 to 621 bar)	00920665

Temperature Transducer with HSI

(HYDAC Sensor Interface)

Model Code	Description	Part No.
ETS 4548-H-000	-13° to 212°F (-25° to 100°C)	00909298
ETS 4578-H-000	-13° to 212°F (-25° to 100°C)	00920662

Flow Sensor with HSI *(HYDAC Sensor Interface)*

Model Code	Description - g/min (l/min)	Part No.
Aluminum		
EVS 3108-H-0020-000	0.26 to 5.28 (1.2 to 20)	00909405
EVS 3108-H-0060-000	1.59 to 15.9 (6 to 60)	00909293
EVS 3108-H-0300-000	3.96 to 79.3 (15 to 300)	00909404
EVS 3108-H-0600-000	10.6 to 159 (40 to 600)	00909403
Stainless Steel		
EVS 3118-H-0020-000	0.26 to 5.28 (1.2 to 20)	00909409
EVS 3118-H-0060-000	1.59 to 15.9 (6 to 60)	00909406
EVS 3118-H-0300-000	3.96 to 79.3 (15 to 300)	00909408
EVS 3118-H-0600-000	10.6 to 159 (40 to 600)	00909407

Accessories

Model Code	Description	Part No.
ZBE 30-02	cable for M12x1 - 6'	06040851
ZBE 30-05	cable for M12x1 - 15'	06040852
UVM 3000	Universal adapter	06040852
ZBE 26	Y adaptor, blue	03304374
ZBE 36	AS 1000 (Aqua Sensor) Adapter	00909737
ZBE 41	Y adaptor, yellow	00910000
USB Cable	Mini USB cable	06049553
Power Supply	DC Charging unit for HMG 510	02702416

HMG 3000 Series

Portable Data Recorder & Diagnostic System

Applications

General

The HMG 3000 data recorder is a portable unit for simple measurement and data capturing tasks involving hydraulic and pneumatic systems. Applications extend primarily to maintenance and servicing, troubleshooting and test stands, as well as, quality inspections.

The HMG 3000 can concurrently evaluate signals up to 10 sensors. The unit features 5 input jacks for connecting the sensors; if necessary this number can be doubled using a Y adapter for measurement operations involving more than 5 sensors. HYDAC offers matching HSI sensors *(HSI = HYDAC Sensor Interface)* for pressure, temperature and flow rate which are automatically recognized by the HMG 3000. Standard HYDAC sensors can also be used. However, these sensors do not feature any automatic sensor detection, consequently the initial setup has to be entered by hand.

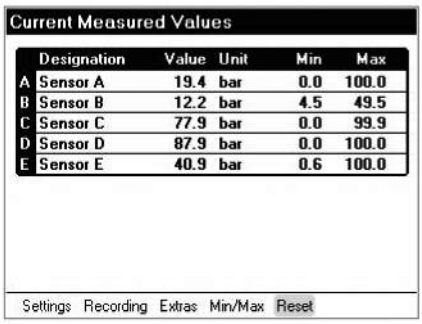

Current Measured Values

	Designation	Value	Unit	Min	Max
A	Sensor A	19.4	bar	0.0	100.0
B	Sensor B	12.2	bar	4.5	49.5
C	Sensor C	77.9	bar	0.0	99.9
D	Sensor D	87.9	bar	0.0	100.0
E	Sensor E	40.9	bar	0.6	100.0

Settings Recording Extras Min/Max Reset

Technical Specifications

Sensor Inputs
- 4 input jacks for 8 analog inputs *(channels A – H)*
- 1 input jack for 2 digital inputs *(channels I – J)*
- Voltage input of -10 V to 10 V *(shown at channel H)*
- Connecting the sensors is done using a standard M12 x 1 plug connector *(5-pin)*.

Channel A to H
- Automatic detection for HSI sensors *(pressure, temperature, volumetric flow rate transducers)*
- Connection of standard sensors with current or voltage signals
- Differential channels for channel A – B; channel C – D

A & B:	C & D:	E to G:	H:
4 to 20 mA	4 to 20 mA	4 to 20 mA	4 to 20 mA
0 to 20 mA	0 to 20 mA	0 to 20 mA	0 to 20 mA
0 to 10 V	0 to 50 V		-10 to +10 V
0 to 5 V	0 to 10 V		
1 to 5 V	0 to 5 V		
1 to 6 V	1 to 5 V		
0.5 to 4.5 V	1 to 6 V		
0.5 to 5.5 V	0.5 to 4.5 V		
	0.5 to 5.5 V		

Channel I and J
Frequency channels *(speed (rpm) measurement, counting function)*
Frequency range: 1 to 30 000 Hz
Switching threshold: 2 V
Maximum input voltage: 50 V

Sampling Rates
(The sampling rate which can be set is dependent on the active measurement channels.)
The following applies:
- 0.1 ms = max. 2 analog input signals
- 0.2 ms = max. 4 analog input signals
- 0.5 ms = all 10 input channels

Battery service times *(battery is fully charged)*
- Without any sensors = ca. 11 hours
- With 2 sensors = ca. 9 hours
- With 4 sensors = ca. 7 hours
- With 8 sensors = ca. 4 hours

Measured Value Memory
Single recording: up to 500,000 measured values
Archive memory: 128 MB
(for approx. 100 individual recordings consisting of 500,000 measured values each)

PC Link Interfaces
- USB port
- Standard serial port (RS 232) for communication and evaluation using the HYDAC HMGWIN 3000 software

Dimensions and Weight
- Measurements: 9.68 x 6.85 x 2.28 in.
- Weight: 2.42 lbs.

Operating and Ambient Conditions
- Operating temperature: 32 to 122°F (0° to 50°C)
- Storage temperature: -4 to 140°F (-20° to 60°C)
- Relative humidity: 0 to 70 %

Standards with which the HMG 3000 Complies
- EMC: EN 6000-6-1 / 2 / 3 / 4
- Safety: EN 61010
- Protection type/rating: IP40

Features

The HMG 3000 is user-friendly by virtue of its easy-access selection menus leading to all of the unit's functions and settings. The unit features a combination keypad for entering numeric values and text.

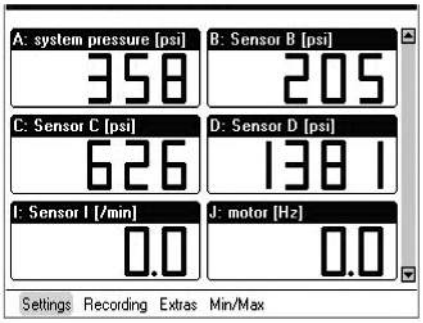

The HMG 3000 was designed in particular for capturing typical measurement values *(pressure, temperature, flow rate)* in hydraulic and pneumatic systems. A variety of other measurement tasks can be performed by virtue of additional inputs for voltage measurement. Example: checking the actuation of a switching valve or plotting the characteristic curve of a valve setpoint. In addition, it is also possible to determine differential values between the measured values of individual sensors. One example of this is taking a flow measurement using a differential pressure orifice plate.

In addition to the analog measurement inputs, the HMG 3000 features two digital inputs, enabling frequencies or speeds to be recorded, thus expanding the unit's range of potential applications.

When taking measurements of rapid, dynamic machine processes, all 8 analog input signals can be concurrently captured at a rate of 0.5 ms.

A special feature of the HMG 3000 is its ability to record measurements of highly dynamic processes in a machine. To this end, two input channels are featured which are capable of recording measured values at a rate of 0.1 ms. This feature is dependent on the use of suitable, fast-acting sensors.

Another feature offered by the HMG 3000 is its ability to record the dynamic processes of a machine in the form of a measurement curve and render them as a graph – on line and in real time.

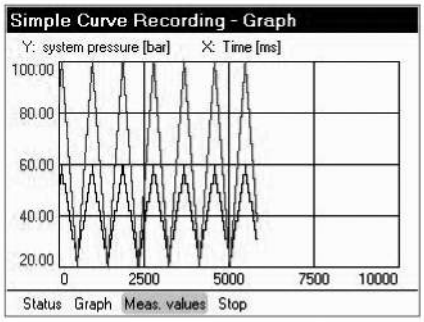

HMG Software

The HMG 3000 communicates with a computer via a USB or serial port. HYDAC offers HMGWIN 3000, the matching software for the HMG 3000, for convenient post-processing, rendering and evaluation of measurements at your computer. It also enables the HMG 3000 to be operated directly from your computer.

The HMG 3000 is equipped with specially developed software providing for fast data collection and processing. A measurement curve can comprise up to 500,000 measured values. The HMG 3000's measured value memory is capable of storing at least 100 of these measurement curves.

Display Options

In addition to enabling simple measurement curves to be recorded, the HMG 3000 also features other functions enabling event-driven measurements to be taken and event logs to be recorded. Various trigger options are available for triggering events.

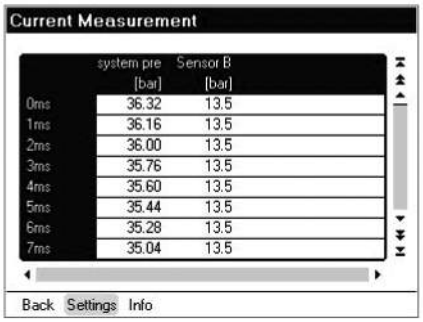

Apart from measurement curves, the HMG 3000 can store user-specific settings (user profiles). The main advantage of this is enabling identical measurements of various equipment items to be repeated for the purpose of preventive maintenance. All the user has to do is retrieve the respective user profile from the HMG 3000's memory.

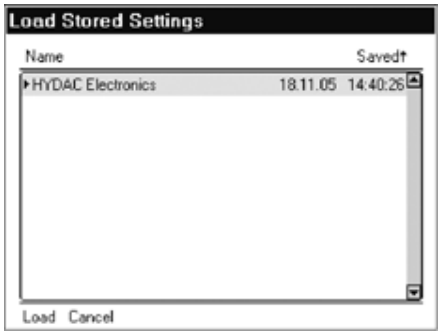

The HMG 3000 features a 3.5" color full-graphics display enabling the measured values to be rendered in an easy-to-read form as text or a measurement curve. Individual measured values can be displayed in a large format (7-segment format), enabling them to be read at an extended distance.

The HMG 3000 also provides for a variety of user-friendly features for displaying, evaluating and processing measured values:

- Table
- Graph
- Scaling
- Ruler
- Tracker
- Zoom

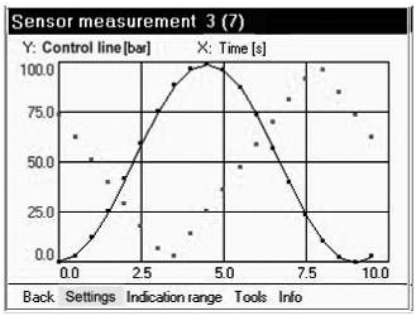

Curve rendering: ***Dotted*** and ***Dotted and solid***

Display Panel & Connections

1. **On/Off** button
2. **Brightness/contrast setting** of the display
3. **ESC key**
   For canceling an entry or going Back step by step
4. **Shift key**
   Switches the numpad to a textpad when pressed; the textpad is active only as long as the Shift key is pressed.
5. **Keypad**
   Numbers and letters can be entered via the combination keypad in a fashion similar to that of mobile phones.
   Numbers: 0 to 9; "." *(decimal separator)* and "-" *(minus)*
   Text Entry: Upper and lower case alpha characters
   INS = insert; **DEL** = delete;
   Entry of spaces: SHIFT + INS *(simultaneously)*
   Deletion of characters: SHIFT + DEL *(simultaneously)*
6. **Graphic display**
   Display of the menu and operating functions, measured values and measurement curves
7. **5-way navigation key**
   For navigating step by step in the display **OK** key for inputting, concluding, accepting or storing an entry

Tip: To accept characters: release the Shift key or press the right arrow of the 5-way navigation key.

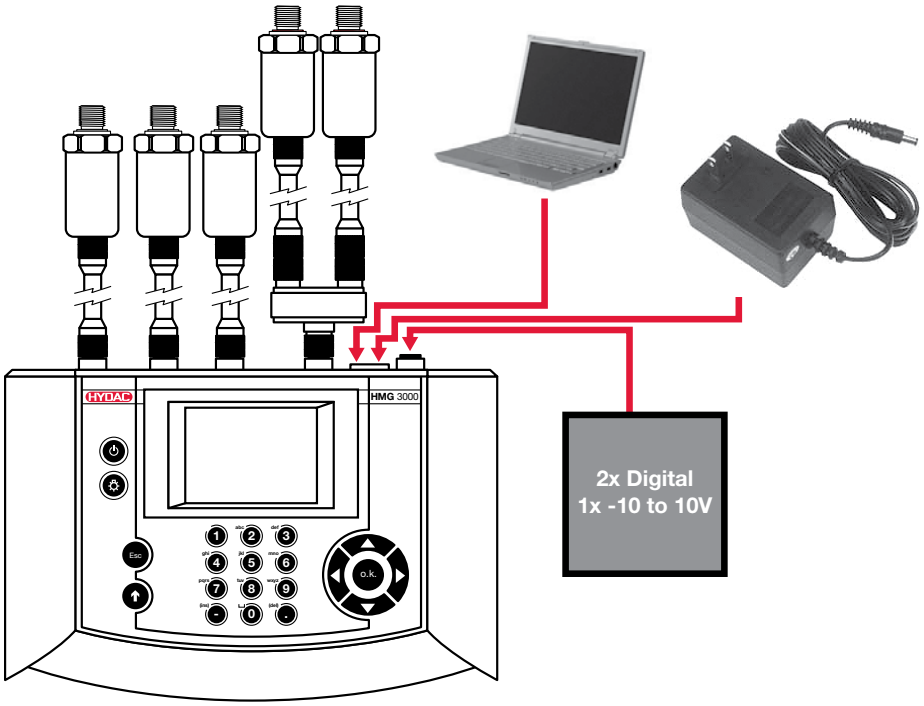

Connections

A - D & E - H 4 sensor input jacks for up to 8 sensors with an analog signal *(channel A – D and E – H*)*, e.g. for sensors for measuring pressure, temperature and flow rate.
The 4 input jacks can be doubled by plugging in Y adapters.
*Channel H can be used for sensors with an analog signal as well as for voltage measurements of -10V to 10V.

I / J 1 or 2 input jacks for:
- 2 digital signals, e.g. for frequency and speed measurements *(channel I, J)*
- 1 voltage input *(-10V to 10V, channel H*)*

DC IN Female connector for power supply
USB 1 USB connector
RS232 1 serial port

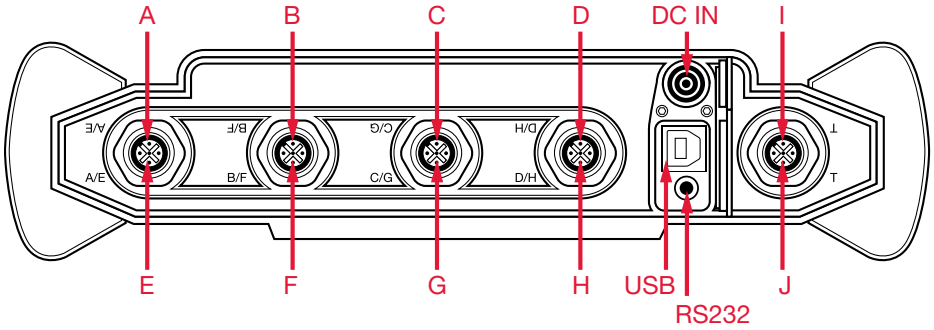

Diagnostic Unit

Model Code	Description	Part No.
HMG 3000-000-E	Includes: • HMG 3000-000 with Manual • Battery Set & Charging Unit • HMGWIN software incl. USB cable	02084116

Pressure Transducer with HSI

(HYDAC Sensor Interface)

Model Code	Description	Part No.
HDA 4748-H-0009-000	-14.5 to 130.5 psi (-1 to 9 bar)	00909429
HDA 4748-H-0016-000	0 to 230 psi (0 to 16 bar)	00909425
HDA 4748-H-0060-000	0 to 870 psi (0 to 60 bar)	00909554
HDA 4748-H-0100-000	0 to 1450 psi (0 to 100 bar)	00909426
HDA 4748-H-0250-000	0 to 3625 psi (0 to 250 bar)	00909337
HDA 4748-H-0400-000	0 to 5800 psi (0 to 400 bar)	00909427
HDA 4748-H-0600-000	0 to 8700 psi (0 to 600 bar)	00909428
HDA 4778-H-0135-000	-14.5 to 135.5 psi (-1 to 9.34 bar)	00920755
HDA 4778-H-0150-000	0 to 150 psi (0 to 10 bar)	00920663
HDA 4778-H-1500-000	0 to 1500 psi (0 to 103 bar)	00920757
HDA 4778-H-3000-000	0 to 3000 psi (0 to 207 bar)	00920756
HDA 4778-H-6000-000	0 to 6000 psi (0 to 144 bar)	00920664
HDA 4778-H-9000-000	0 to 9000 psi (0 to 621 bar)	00920665

Temperature Transducer with HSI

(HYDAC Sensor Interface)

Model Code	Description	Part No.
ETS 4548-H-000	-13° to 212°F (-25° to 100°C)	00909298
ETS 4578-H-000	-13° to 212°F (-25° to 100°C)	00920662

Additional Sensors

Model Code	Description	Part No.
HDS 1000-002	RPM Sensor (plug M12x1) 2M Includes HDS 1000 Reflector Set (part no. 00904812)	00909436
HDS 1000 Reflector Set	Reflective foil set 25 pieces	00904812
SSH 1000	Sensor simulator for 2 HSI *(ideal for training purposes)*	00909414

Flow Sensor with HSI *(HYDAC Sensor Interface)*

Model Code	Description - g/min (l/min)	Part No.
Aluminum		
EVS 3108-H-0020-000	0.26 to 5.28 (1.2 to 20)	00909405
EVS 3108-H-0060-000	1.59 to 15.9 (6 to 60)	00909293
EVS 3108-H-0300-000	3.96 to 79.3 (15 to 300)	00909404
EVS 3108-H-0600-000	10.6 to 159 (40 to 600)	00909403
Stainless Steel		
EVS 3118-H-0020-000	0.26 to 5.28 (1.2 to 20)	00909409
EVS 3118-H-0060-000	1.59 to 15.9 (6 to 60)	00909406
EVS 3118-H-0300-000	3.96 to 79.3 (15 to 300)	00909408
EVS 3118-H-0600-000	10.6 to 159 (40 to 600)	00909407

Accessories

Model Code	Description	Part No.
USB Cable	Connection to PC	06040585
ZBE 30-02	cable for M12x1 - 6’	06040851
ZBE 30-05	cable for M12x1 - 15’	06040852
ZBE 34	M12x1 / Binder adapter	03236597
ZBE 35	M12x1 / Hirschmann adapter	03236601
ZBE 36	AS 1000 *(Aqua Sensor)* Adapter	00909737
ZBE 38	M12 Y-adapter *(doubles the inputs)*	03224436
Hydraulic Adaptor Set *(2 pieces each)*	Adapter hose DN 2 / 1620/1620, 400mm and 1000 mm, pressure gauge connectors 1620 / G1/4, adapter 1615/1620, bulkhead couplings 1620/1620	00903083
UVM 3000	Universal connection module for HMG 3000	00909752
Bag	with carry strap	00909795
Aluminum Case	for HMG 3000 and accessories	06042959
Power Supply	DC Charging unit for HMG 3000	06054296
ZBE 31	Car Charger for HMG 3000	00909739

HYDAC HSI sensors are part of a new plug and play, self-identifying sensor line. HSI sensors must be used with the HMG 500 and facilitate easy use with the HMG 3000. The HMG 3000 is capable of reading standard sensors as well as competitive models.

HDA 4700-H Series

Pressure Transducer with HSI Sensor Recognition

Applications

Description

The pressure transmitter HDA 4748-H with HSI sensor recognition has been specially developed for use in conjunction with HYDAC measuring instruments HMG 500, HMG 510, HMG 3000 and CMU 1000.

For data transmission, the HDA 4748-H has an HSI interface *(HYDAC Sensor Interface)*.

The HSI sensors are automatically recognized via the HSI interface by the above-mentioned HYDAC measuring instruments and all the necessary basic settings are taken from each sensor.

Like all pressure transmitters of the HDA 4700 series, the HDA 4748-H also has a very accurate and robust sensor cell with a thin-film strain gauge on a stainless steel membrane. It features excellent technical specifications and is very compact.

Special Features

- Automatic recognition by and voltage supply from HYDAC measuring instruments HMG 500, HMG 510, HMG 3000 or CMU 1000
- Automatic transfer of measuring range, measured value and measurement unit
- Accuracy ≤ ±0.25 % BFSL
- Highly robust sensor cell
- Very small temperature error
- Excellent EMC characteristics
- Excellent long term stability
- Very compact design

Approvals

CE mark is a mandatory conformity mark on many products placed on the single market in the European Economic Area

Technical Details

Sensor Specifications	
Measuring ranges -bar *(psi upon request)*	-1 to 9, 16, 60, 100, 250, 400, 600
Overload pressure -bar *(psi upon request)*	20, 32, 120, 200, 500, 800, 900
Burst pressure -bar *(psi upon request)*	100, 200, 300, 500, 1000, 2000, 2000
Mechanical connection	G1/4A DIN 3852 male *(standard for bar ranges only)* SAE 6 9/16-18 UNF 2A *(psi ranges only)* other connections upon request
Tightening torque	15 lb-ft (20 Nm)
Parts in contact with media	Stainless Steel, FPM Seal
Accuracy (B.F.S.L.) including linearity, hysteresis, and repeatability	≤ ±0.25% BFSL
Temperature compensation zero point	≤ ±0.0045% FS / °F typ ≤ ±0.0085% FS / °F max
Temperature compensation over range	≤ ±0.0045% FS / °F typ ≤ ±0.0085% FS / °F max
Rise time	≤ 0.5 ms
Long-term drift	≤ ± 0.1% FS typ. / year
Life expectancy	10 million load cycles (0 to 100% FS)
Weight	Approximately 150 g
Output signal	HSI
Environmental Condition	
Compensated temperature range	-13° to 185°F (-25° to 85°C)
Operating temperature range	-40° to 185°F (-40° to 85°C)
Storage temperature range	-40° to 212°F (-40° to 100°C)
Media temperature range	-40° to 212°F (-40° to 100°C)
CE mark	EN 61000-6-1 / 2 / 3 / 4
Vibration resistance to DIN EN 60068-2-6 at 10 to 500 Hz	≤ 20g
Environmental protection	IP 67
Electrical Specifications	
Supply voltage	from HMGs 3000, 510 or 500
Reverse polarity protection of the supply voltage, excess voltage, override and short circuit protection	Standard
Electrical connection	ZBE 30-02 sensor cable M12x1 (2m) ZBE 30-05 sensor cable M12x1 (5m)

Model Code

HDA 4 7 X 8 - H - XXXX - 000 (PSI)

Accuracy
7 = High Pressure Thin-film 0.25% BFSL accuracy

Mechanical Connection
4 = G1/4A DIN 3852 male *(bar ranges only)*
7 = SAE 6 9/6-18 UNF 2A *(psi ranges only)*

Electrical Connection
8 = M12x1 plug, 5 pole *(connector not included)*

Signal Technology
H = Sensor Identification HSI

Pressure Range
For HDA 4748 only *(G1/4A DIN 3852)*
0009 (-1 to 9 bar), 006, 016, 060, 100, 250, 400, 600 bar
(psi ranges upon request)

Modification Number
000 Standard

(psi)
psi version *(Leave blank for bar version)*

Dimensions

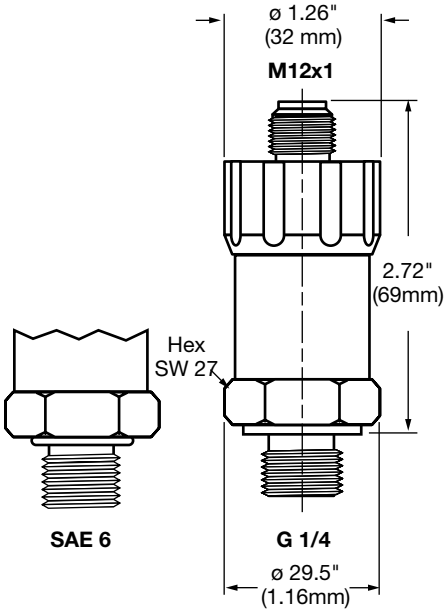

ETS 4548 HSI Series

HYDAC Self Identification

Applications

Description

The electronic pressure transmitter ETS 4548-H with HSI sensor recognition has been specially developed for use in conjunction with HYDAC measuring instruments HMG 500, HMG 510, HMG 3000 and CMU 1000.

For data transmission, the ETS 4548-H has a HSI interface *(HYDAC Sensor Interface)*. The HSI sensors are automatically recognized via the HSI interface by the above-mentioned HYDAC measuring instruments and all the necessary basic settings are taken from each sensor.

Like all temperature transmitters in the ETS 4000 series,the ETS 4548-H features a robust design and excellent EMC characteristics. Based on a silicon semiconductor device and corresponding evaluation electronics, the temperature sensor is designed to measure temperatures in the range -10 to 212°F.

Special Features

- Automatic recognition by and voltage supply from HYDAC measuring instruments HMG 500, HMG 510, HMG 3000 or CMU 1000
- Automatic transfer of measuring range, measured value and measurement units
- Robust design
- Pressure resistant to 8700 psi
- Excellent EMC characteristics
- Standard protection class IP 67

Approvals

CE mark is a mandatory conformity mark on many products placed on the single market in the European Economic Area

Technical Details

Sensor Specifications	
Measuring range	-13° to 212°F (-25° to 100°C)
Rated pressure - psi	8700
Mechanical connection	G1/4A DIN 3852 male *(standard for °C ranges only)* SAE 6 9/16-18 UNF 2A *(standard for °F ranges only)*
Tightening torque	15 lb-ft (20 Nm)
Parts in contact with media	Stainless Steel, FPM Seal
Accuracy	≤ ±1.5% FS typ.
Rise time to DIN EN 60751	t50= 4s ; t90= 6s
Output signal	HSI *(Automatic Sensor Recognition)*
Weight	Approximately 200 g.
Environmental Condition	
Operating temperature range	-13° to 212°F (-25 to 100°C)
Storage temperature range	-40° to 212°F (-40° to 100°C)
Media temperature range	-40° to 248°F (-40° to 120°C)
CE mark	EN 61000-6-1 / 2 / 3 / 4
Vibration resistance to DIN EN 60068-2-6 at 10 to 500 Hz	≤ 20g
Environmental protection	IP 67 *(When an IP 67 connector is usesd)*
Electrical Specifications	
Supply voltage	from HMGs 3000, 510 or 500
Electrical connection	ZBE 30-02 sensor cable M12x1 (6') ZBE 30-05 sensor cable M12x1 (15')

Model Code

ETS 4 5 4 8 - H - 000

Mechanical Connection
4 = G1/4 A DIN 3852 (male) (°C)
7 = SAE 6, 9/16-18UNF2A male (°F)

Electrical Connection
8 = connector M12X1, 5-pol.

Signal Technology
H = Sensor Identification HSI

Modification Number
000 = standard

Dimensions

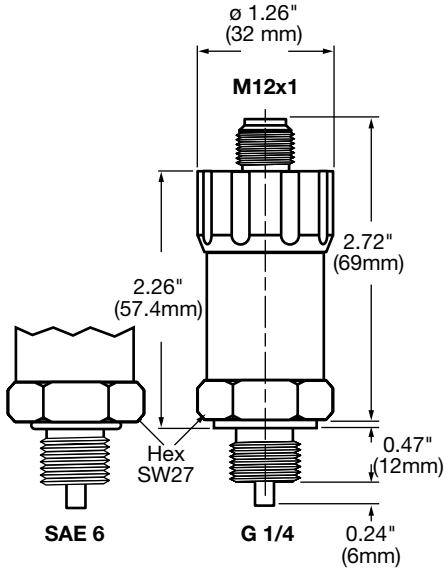

EVS 3100 HSI Series

HYDAC Self Identification

Applications

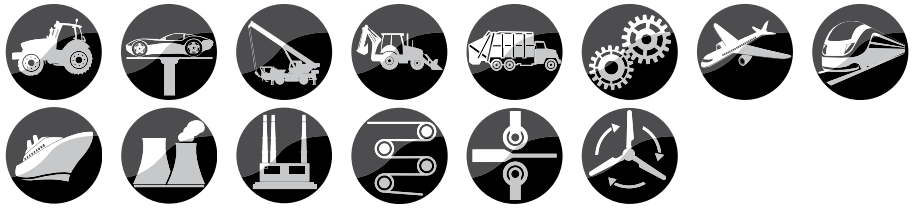

Description

The flow rate transmitters in the series EVS 3100-H and EVS 3110-H with HSI sensor recognition have been specially developed for use in conjunction with HYDAC measuring instruments HMG 500, HMG 510, HMG 3000 and CMU 1000.

For data transmission, the EVS 31x0-H has an HSI interface *(HYDAC Sensor Interface)*.

The HSI sensors are recognised automatically via the HSI interface by the above-mentioned HYDAC measuring instruments, and all the necessary basic settings are taken from each sensor.

As with all flow rate transmitters in the series EVS 3100 and EVS 3110, the EVS 31x0-H also operates according to the turbine principle. The speed of an impeller turning in the fluid flow is measured and converted into an electronic signal.

Special Features

- Fully automatic recognition by and voltage supply from HYDAC measuring instruments HMG 500, HMG 510, HMG 3000 or CMU 1000
- Automatic transfer of measuring range, measured value and measurement unit
- Viscosities of 1 to 100 cSt
- Output signal 4 to 20 mA
- Additional connection of temperature and / or pressure transmitters possible

Approvals

CE mark is a mandatory conformity mark on many products placed on the single market in the European Economic Area

Technical Details

Housing material - EVS 3100 EVS 3110	Aluminum Stainless Steel
Measurement medium - EVS 3100 EVS 3110	Hydraulic oils* Water based fluids*
Supply voltage	from HMG 500/510/3000
CE mark	EN 61000-6-1 / 2 / 3 / 4
Compensated temperature range	-4° to 150°F (-20° to 70°C)
Operating temperature	-4° to 158°F (-20° to 70°C)
Media temperature range	-4° to 194°F (-20° to 90°C)
Storage temperature	-40° to 212°F(-40° to 100°C)
Permissible viscosity range	1 to 100 cSt
Calibrated at - EVS 3100 EVS 3110	30 cSt 5 cSt
Accuracy class	≤ ±2% of the instantaneous value
Measuring ranges / Operating pressure EVS 31XX-A-0020-000 EVS 31XX-A-0060-000 EVS 31XX-A-0300-000 EVS 31XX-A-0600-000	 0.26 to 5.28 gpm / 5800psi 1.59 to 15.9 gpm / 5800 psi 3.96 to 79.3 gpm / 5800 psi 10.6 to 159 gpm / 4567 psi *(5800 psi max for EVS 3110)*
Protection class to DIN 40050	IP 67 *(M12x1, with ZBE 08 molded cable)*
Mechanical connection/ Torque rating EVS 31XX-A-0020-000 EVS 31XX-A-0060-000 EVS 31XX-A-0300-000 EVS 31XX-A-0600-000	 G1/4 female thread / approx. 44 lb-ft (60 Nm) G1/2 female thread / approx. 95 lb-ft (130 Nm) G1 1/4 female thread / approx. 370 lb-ft (500 Nm) G1 1/2 female thread / approx. 440 lb-ft (600 Nm)
Additional connections on housing	2 x G 1/4 female ports for pressure or temperature sensors

*other fluids on request
**other ranges on request

Model Code

EVS 3 1 X 8 - H - XXXX - 000

Housing Material
0 = Aluminum
1 = Stainless Steel

Electrical Connection
8 = M12x1, 5 pole *(connector not supplied)*

Signal
H = HSI (Automatic Sensor Identification)

Measuring Range
0020 = 0.26 to 5.28 gpm
0060 = 1.59 to 15.9 gpm
0300 = 3.96 to 29.3 gpm
0600 = 10.6 to 159 gpm

Modification Number
000 = Standard

Dimensions

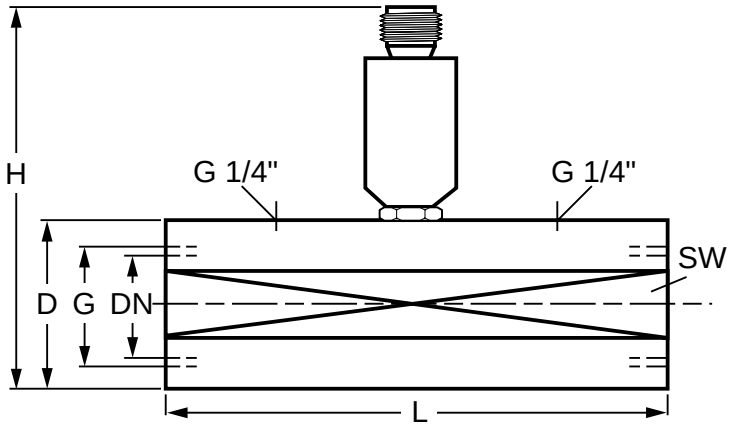

Model	Meas. Range gpm (l/min)	Material	L	H	D / SW*	G	DN	Pmax in bar	Tmax
EVS 310X-H-0020	0.26 - 5.28 (1.2 - 20)	AL/SS	117	135	47.0 / 46	G 1/4	7	400	-20 to 90°C
EVS 310X-H-0060	1.59 - 15.9 (6 - 60)	AL/SS	144	135	48.5 / 46	G 1/2	11	400	-20 to 90°C
EVS 310X-H-0300	3.96 - 79.3 (15 - 300)	AL/SS	155	150	63.5 / 60	G 1 1/4	22	400	-20 to 90°C
EVS 310X-H-0600	10.6 - 159 (40 - 600)	AL/SS	181	150	63.5 / 60	G 1 1/2	30	315(A) 400(S)	-20 to 90°C

HDA 4100 ATEX Series

Absolute Pressure Transducer - Intrinsically Safe with ATEX Approval

Applications

Description

The pressure transmitter HDA 4100 in ATEX version has been specially developed for use in potentially explosive atmospheres and is based on the HDA 4000 series.

As with the industry model, the HDA 4100 in ATEX version has a ceramic measurement cell with thick-film strain gauge for measuring absolute pressure in the low pressure range.

Intended areas of application are, for example, in the oil and gas industry, in mining, on gas turbines or in locations with high levels of dust, e.g. in mills.

Special Features

- Accuracy ≤ ±0.5 % BFSL typ.
- Certificates:
  KEMA 05ATEX1016 X
  KEMA 05ATEX1021
- Output signal 4 to 20 mA
- Very small temperature error
- Excellent EMC characteristics
- Excellent long-term characteristics

Approvals

ATEX Approvals

1. I M1 EEx ia

2. II 1G EEx ia IIC T6
3. II 1/2 G EEx ia IIC T6
4. II 3G EEx nA II T4 IP65
5. II 3G EEx nL IIC T4
6. II 2G EEx ia IIC T6

7. II 1D IP6X T80°C
8. II 3D IP6X T80°C

CE mark is a mandatory conformity mark on many products placed on the single market in the European Economic Area

Ex mark is a specific marking for explosive protection equipment

Technical Details

Sensor Specifications		
Measuring ranges - psi	15, 50	
Overload pressure - psi	45, 150	
Burst pressure - psi	70, 250	
Mechanical connection	G1/4A DIN 3852 male *(bar ranges only)* 1/4”-18 NPT male *(psi ranges only)* other connections upon request	
Tightening torque	G1/4: 15 lb-ft (20 Nm) 1/4” NPT: 30 lb-ft (40Nm)	
Parts in contact with media	Sensor: Ceramic Mechanical connection: Stainless steel Seal: FPM or EPDM	
Accuracy (b.F.S.L.) including Linearity, hysteresis, and repeatability	≤ ±0.5% BFSL	
Temperature compensation zero point	≤ ±0.012% FS / °F typ.	≤ ±0.017% FS / °F max.
Temperature compensation over range	≤ ±0.012% FS / °F typ.	≤ ±0.017% FS/ °F max.
Rise time	≤ 2 ms	
Long-term drift	≤ ± 0.3% FS typ. / year	
Life expectancy	10 million load cycles (0 to 100% FS)	
Weight	Approx. 150 g	
Output signal	4 to 20 mA, 2 wire, R_{Lmax} = (UB - 10V) / 20 mA [kΩ]	
Environmental Condition		
Compensated temperature range	T6/T80: -4° to 140°F	T4: -4° to 185°F
Operating temperature range	T6/T80: -4° to 140°F	T4: -4° to 185°F
Ambient temperature	T6/T80: -4° to 140°F	T4: -4° to 185°F
Media temperature range	T6/T80: 140°F	T4: 185°F
Storage temperature range	-40° to 212°F	
CE mark	EN 61000-6-1/2/3/4, EN 60079-0/11/26, IEC 61241-11	
Vibration resistance to DIN EN 60068-2-6 at 10 to 500 Hz	≤ 20g	
Environmental protection	IP 65 *(DIN 43650 and M18x1 connectors)* IP 67 *(ZBE 06 molded cable)*	
Electrical Specifications		
Supply voltage	12 to 28 VDC	
Residual ripple suppy voltage	≤ 5%	
Max supply current	100 mA	
Max supply power	up to 28V: 1 W	
Max capacitance of transmitter	≤ 12 nF	
Max inductance of transmitter	0 H	
Isolation voltage	125 VAC to housing *(standard)*	
Reverse polarity protection of the supply voltage, excess voltage, override and short circuit protection	Standard	

Model Code

HDA 4 1 X X - A - XXXX - A X X - 000 - X1 (PSI)

Mechanical Connection
4 = G1/4A DIN 3852 male *(bar only)*
8 = 1/4"-18 NPT *(psi only)*
Other connections upon request

Electrical Connection
4 = 4 pole plug M18x1, Binder Series *(connector not included)*
5 = DIN 43650/ISO 4400 plug, 3 pole + ground *(incudes ZBE 01)*
6 = M12x1 plug, 4 pole *(connector not included)*

Output Signal
A = 4-20mA, 2-wire

Pressure Range
For HDA 418X *(1/4"-18 NPT only)*
0015, 0050 psi

Approval
A = ATEX *(for details see description of approvals)*

Isolation Voltage
N = 125 VAC to housing *(standard)*

Types of Protection and Application Areas *(see chart below)*
1 = I M1 EEx ia
II 1G EEx ia IIC T6
II 1/2 G EEx ia IIC T6
II 2G EEx ia IIC T6
7 = II 3G EEx nL IIC T4
Other protection types upon request

Modification Number
000 = Standard

Seal Material
F1 FPM Seal *(hydraulic oil)*
E1 EPDM Seal *(coolant, ammonia, water)*

(psi)
psi version *(leave blank for bar version)*

Pin Connections

Binder 714 M18

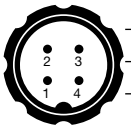

Pin	41X4-A
1	nc
2	Signal +
3	Signal -
4	nc

DIN 43650

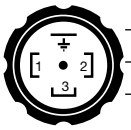

Pin	41X5-A
1	Signal +
2	Signal -
3	nc
4	PE/GND

M12x1, 4 pole

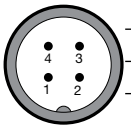

Pin	41X6-A
1	Signal +
2	nc
3	Signal -
4	nc

Dimensions

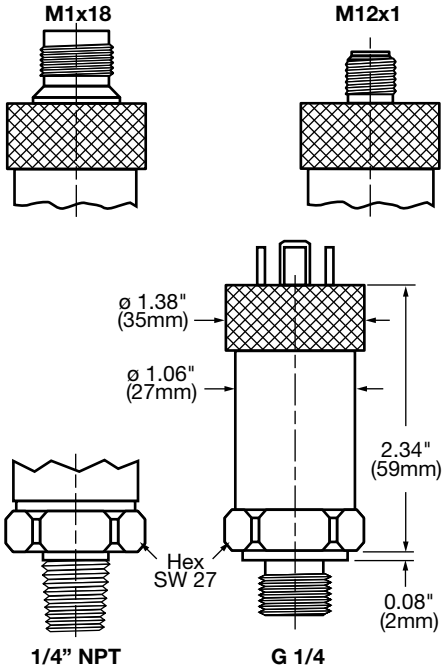

Application Areas

Code Type Code	1	1	1	7
Protection class	I M1 EEx ia	II 1G EEx ia IIC T6 II 1/2G EEx ia IIC T6	II 2G EEx ia IIC T6	II 3G EEx nL IIC T4
Certificate number	KEMA 05ATEX1016X	KEMA 05ATEX1016X	KEMA 05ATEX1016X	KEMA 05ATEX1021
Zones / Categories	Group I Category M 1 mining Protection type: intrinsically safe ia with barrier T_a: -25° to 60°C	Group II Category 1G, 1/2G Gases Protection type: intrinsically safe ia with barrier Use in: Zone 0 Retrofit in Zone 0 T_a: -25° to 60°C	Group II Category 2G Gases Protection type: intrinsically safe ia with barrier Use in: Zone 1 & 2 T_a: -25° to 60°C	Group II Category 3G Gases Protection type: nL Use in: Zone 2 T_a: -25° to 60°C
Electrical Connection *(see model code)*	4, 5, 6	4, 5, 6	4, 5, 6	4, 5, 6

HDA 4300 ATEX Series

Low Pressure Transducer - Intrinsically Safe with ATEX Approval

Applications

Description

The pressure transmitter HDA 4300 in ATEX version has been specially developed for use in potentially explosive atmospheres and is based on the HDA 4000 series.

As with the industry model, the HDA 4300 in ATEX version has a ceramic measurement cell with thickfilm strain gauge for measuring relative pressure in the low pressure range.

Intended areas of application are, for example, in the oil and gas industry, in mining, on gas turbines or in locations with high levels of dust, e.g. in mills.

Special Features

- Accuracy ≤ ±0.5% BFSL
- Certificates:
  KEMA 05ATEX1016 X
  KEMA 05ATEX1021
- Output signal 4 to 20 mA
- Very small temperature error
- Excellent EMC characteristics
- Excellent long-term characteristics

Approvals

ATEX Approvals

1. I M1 EEx ia

2. II 1G EEx ia IIC T6
3. II 1/2 G EEx ia IIC T6
4. II 3G EEx nA II T4 IP65
5. II 3G EEx nL IIC T4
6. II 2G EEx ia IIC T6

7. II 1D IP6X T80°C
8. II 3D IP6X T80°C

CE mark is a mandatory conformity mark on many products placed on the single market in the European Economic Area

Ex mark is a specific marking for explosive protection equipment

Technical Details

Sensor Specifications		
Measuring ranges - psi	15, 30, 50, 100, 150, 250, 500	
Overload pressure - psi	45, 100, 150, 290, 450, 725, 1500	
Burst pressure - psi	70, 150, 250, 400, 650, 1000, 2500	
Mechanical connection	G1/4A DIN 3852 male *(bar ranges only)* 1/4”-18 NPT male *(psi ranges only)* other connections upon request	
Tightening torque	G1/4: 15 lb-ft (20 Nm) 1/4” NPT: 30 lb-ft (40Nm)	
Parts in contact with media	Sensor: Ceramic Mechanical connection: Stainless steel Seal: FPM or EPDM	
Accuracy (B.F.S.L.) including linearity, hysteresis, and repeatability	≤ ±0.5% BFSL	
Temperature compensation zero point	≤ ±0.012% FS / °F typ.	≤ ±0.017% FS / °F max.
Temperature compensation over range	≤ ±0.012% FS / °F typ.	≤ ±0.017% FS/ °F max.
Rise time	≤ 2 ms	
Long-term drift	≤ ± 0.3% FS typ. / year	
Life expectancy	10 million load cycles (0 to 100% FS)	
Weight	Approx. 150 g	
Output signal	4 to 20 mA, 2 wire, R_{Lmax} = (UB - 10V) / 20 mA [kΩ]	
Environmental Condition		
Compensated temperature range	T6/T80: -4° to 140°F	T4: -4° to 185°F
Operating temperature range	T6/T80: -4° to 140°F	T4: -4° to 185°F
Ambient temperature	T6/T80: -4° to 140°F	T4: -4° to 185°F
Media temperature range	T6/T80: 140°F	T4: 185°F
Storage temperature range	-40° to 212°F	
CE mark	EN 61000-6-1/2/3/4, EN 60079-0/11/26, IEC 61241-11	
Vibration resistance to DIN EN 60068-2-6 at 10 to 500 Hz	≤ 20g	
Environmental protection	IP 65 *(DIN 43650 and M18x1 connectors)* IP 67 *(ZBE 06 molded cable)*	
Electrical Specifications		
Supply voltage	12 to 28 VDC	
Residual ripple suppy voltage	≤ 5%	
Max supply current	100 mA	
Max supply power	up to 28V: 1 W	
Max capacitance of transmitter	≤ 12 nF	
Max inductance of transmitter	0 H	
Isolation voltage	125 VAC to housing *(standard)*	
Reverse polarity protection of the supply voltage, excess voltage, override and short circuit protection	Standard	

Model Code

HDA 4 3 X X - A - XXXX - A X X - 000 - X1 (PSI)

Mechanical Connection
4 = G1/4A DIN 3852 male *(bar only)*
8 = 1/4"-18 NPT *(psi only)*
Other connections upon request

Electrical Connection
4 = 4 pole plug M18x1, Binder Series *(connector not included)*
5 = DIN 43650/ISO 4400 plug, 3 pole + ground *(incudes ZBE 01)*
6 = M12x1 plug, 4 pole *(connector not included)*

Output Signal
A = 4-20mA, 2-wire

Pressure Range
HDA 438X psi version
0015, 0030, 0050, 0100, 0150, 0250, 0500

Approval
A = ATEX *(for details see description of approvals)*

Isolation Voltage
N = 125 VAC to housing *(standard)*

Types of Protection and Application Areas *(see chart below)*
1 = I M1 EEx ia
II 1G EEx ia IIC T6
II 1/2 G EEx ia IIC T6
II 2G EEx ia IIC T6
7 = II 3G EEx nL IIC T4
Other protection types upon request

Modification Number
000 = Standard

Seal Material
F1 FPM Seal *(hydraulic oil)*
E1 EPDM Seal *(coolant, ammonia, water)*

(psi)
psi version *(leave blank for bar version)*

Pin Connections

Binder 714 M18

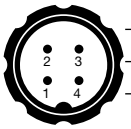

Pin	43X4-A
1	nc
2	Signal +
3	Signal -
4	nc

DIN 43650

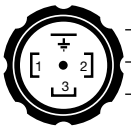

Pin	43X5-A
1	Signal +
2	Signal -
3	nc
4	PE/GND

M12x1, 4 pole

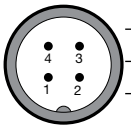

Pin	43X6-A
1	Signal +
2	nc
3	Signal -
4	nc

Dimensions

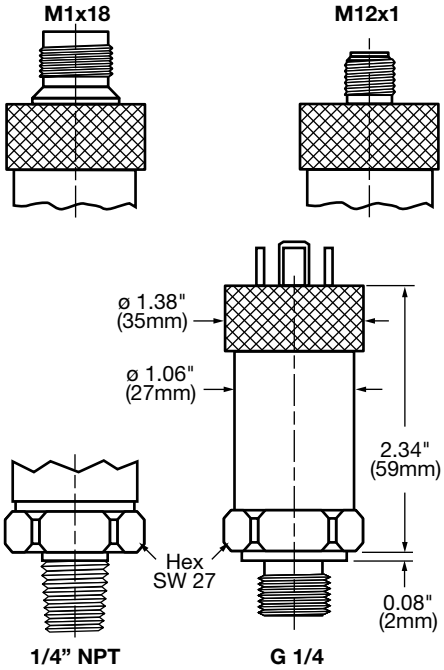

Application Areas

Code Type Code	1	1	1	7
Protection class	I M1 EEx ia	II 1G EEx ia IIC T6 II 1/2G EEx ia IIC T6	II 2G EEx ia IIC T6	II 3G EEx nL IIC T4
Certificate number	KEMA 05ATEX1016X	KEMA 05ATEX1016X	KEMA 05ATEX1016X	KEMA 05ATEX1021
Zones / Categories	Group I Category M 1 mining Protection type: intrinsically safe ia with barrier T_a: -25° to 60°C	Group II Category 1G, 1/2G Gases Protection type: intrinsically safe ia with barrier Use in: Zone 0 Retrofit in Zone 0 T_a: -25° to 60°C	Group II Category 2G Gases Protection type: intrinsically safe ia with barrier Use in: Zone 1 & 2 T_a: -25° to 60°C	Group II Category 3G Gases Protection type: nL Use in: Zone 2 T_a: -25° to 60°C
Electrical Connection *(see model code)*	4, 5, 6	4, 5, 6	4, 5, 6	4, 5, 6

HDA 4400 ATEX Series

High Pressure, Medium Accuracy Transducer Intrinsically Safe with ATEX Approval

Applications

Description

The pressure transmitter HDA 4400 in ATEX version has been specially developed for use in potentially explosive atmospheres and is based on the HDA 4000 series.

As with the industry model, the HDA 4700 in ATEX version has a stainless steel measurement cell with thin-film strain gauge for measuring relative pressure in the high pressure range.

Intended areas of application are, for example, in the oil and gas industry, in mining, on gas turbines or in locations with high levels of dust, e.g. in mills.

Special Features

- Accuracy ≤ ±0.5% BFSL
- Certificates:
  KEMA 05ATEX1016 X
  KEMA 05ATEX1021
- Output signal 4 to 20 mA
- Very small temperature error
- Excellent EMC characteristics
- Excellent long-term characteristics

Approvals

ATEX Approvals

1. I M1 EEx ia

2. II 1G EEx ia IIC T6
3. II 1/2 G EEx ia IIC T6
4. II 3G EEx nA II T4 IP65
5. II 3G EEx nL IIC T4
6. II 2G EEx ia IIC T6

7. II 1D IP6X T80°C
8. II 3D IP6X T80°C

CE mark is a mandatory conformity mark on many products placed on the single market in the European Economic Area

Ex mark is a specific marking for explosive protection equipment

Technical Details

Sensor Specifications		
Measuring ranges - psi	500, 750, 1000, 1500, 3000, 6000, 9000	
Overload pressure - psi	1160, 1160, 2900, 2900, 7250, 11600, 14500	
Burst pressure - psi	2900, 2900, 7250, 7250, 14500, 29000, 29000	
Mechanical connection	G1/4A DIN 3852 male *(bar ranges only)* SAE 6 9/16-18 UNF2A *(psi ranges only)* other connections upon request	
Tightening torque	15 lb-ft (20 Nm)	
Parts in contact with media	Sensor: Stainless steel 1.4542 Mechanical connection: Stainless steel 1.4542, 1.4301, 1.4435, 1.4571, 1.4404, 316L, 304 Seal: FPM (SAE 6, G1/4)	
Accuracy (B.F.S.L.) including linearity, hysteresis, and repeatability	≤ ±0.5% BFSL	
Temperature compensation zero point	≤ ±0.0085% FS / °F typ. ≤ ±0.014% FS / °F max.	
Temperature compensation over range	≤ ±0.0085% FS / °F typ. ≤ ±0.014% FS / °F max.	
Rise time	≤ 2 ms	
Long-term drift	≤ ±0.3% FS typ. / year	
Life expectancy	10 million load cycles (0 to 100% FS)	
Weight	Approx. 150 g	
Output signal	4 to 20 mA, 2 wire, R_{Lmax} = (UB - 10V) / 20 mA [kΩ]	
Environmental Condition		
Compensated temperature range	T6/T80: -4° to 140°F	T4: -4° to 185°F
Operating temperature range	T6/T80: -4° to 140°F	T4: -4° to 185°F
Ambient temperature	T6/T80: -4° to 140°F	T4: -4° to 185°F
Media temperature range	T6/T80: 140°F	T4: 185°F
Storage temperature range	-40° to 212°F	
CE mark	EN 61000-6-1/2/3/4, EN 60079-0/11/26, IEC 61241-11	
Vibration resistance to DIN EN 60068-2-6 at 10 to 500 Hz	≤ 20g	
Environmental protection	IP 65 *(DIN 43650 and M18x1 connectors)* IP 67 *(ZBE 06 molded cable)*	
Electrical Specifications		
Supply voltage	12 to 28 VDC	
Residual ripple suppy voltage	≤ 5%	
Max supply current	100 mA	
Max supply power	up to 28V: 1 W	
Max capacitance of transmitter	≤ 12 nF	
Max inductance of transmitter	0 H	
Isolation voltage	125 VAC to housing *(standard)*	
Reverse polarity protection of the supply voltage, excess voltage, override and short circuit protection	Standard	

Model Code

HDA 4 4 X X - A - XXXX - A X X - 000 (PSI)

Mechanical Connection
4 = G1/4A DIN 3852 male *(bar only)*
7 = SAE 6 9/16-18 UNF2A *(psi only)*
Other connections upon request

Electrical Connection
4 = 4 pole plug M18x1, Binder Series *(connector not included)*
5 = DIN 43650/ISO 4400 plug, 3 pole + ground *(incudes ZBE 01)*
6 = M12x1 plug, 4 pole *(connector not included)*

Output Signal
A = 4-20mA, 2-wire

Pressure Range
HDA 448X psi version
0500, 0750, 1000, 1500, 3000, 5000, 6000, 9000

Approval
A = ATEX *(for details see description of approvals)*

Isolation Voltage
N = 125 VAC to housing *(standard)*

Types of Protection and Application Areas *(see chart below)*
1 = I M1 EEx ia
II 1G EEx ia IIC T6
II 1/2 G EEx ia IIC T6
II 2G EEx ia IIC T6
7 = II 3G EEx nL IIC T4
Other protection types upon request

Modification Number
000 = Standard

(psi)
psi version *(leave blank for bar version)*

Pin Connections

Binder 714 M18

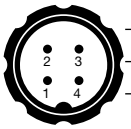

Pin	44X4-A
1	nc
2	Signal +
3	Signal -
4	nc

DIN 43650

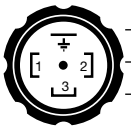

Pin	44X5-A
1	Signal +
2	Signal -
3	nc
4	PE

M12x1, 4 pole

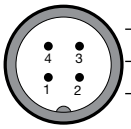

Pin	44X6-A
1	Signal +
2	nc
3	Signal -
4	nc

Dimensions

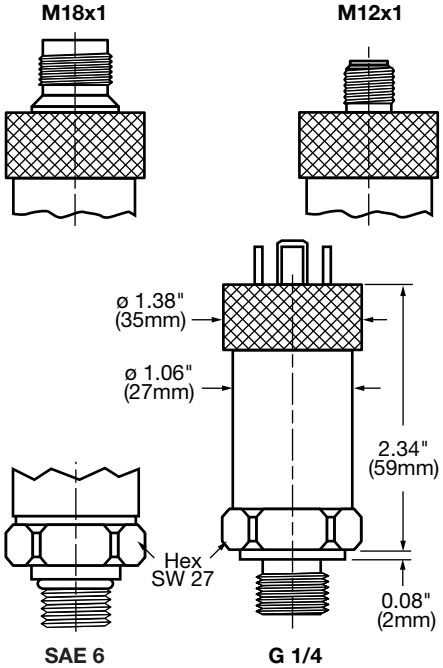

Application Areas

Code Type Code	1	1	1	7
Protection class	I M1 EEx ia	II 1G EEx ia IIC T6 II 1/2G EEx ia IIC T6	II 2G EEx ia IIC T6	II 3G EEx nL IIC T4
Certificate number	KEMA 05ATEX1016X	KEMA 05ATEX1016X	KEMA 05ATEX1016X	KEMA 05ATEX1021
Zones / Categories	Group I Category M 1 mining Protection type: intrinsically safe ia with barrier T_a: -25° to 60°C	Group II Category 1G, 1/2G Gases Protection type: intrinsically safe ia with barrier Use in: Zone 0 Retrofit in Zone 0 T_a: -25° to 60°C	Group II Category 2G Gases Protection type: intrinsically safe ia with barrier Use in: Zone 1 & 2 T_a: -25° to 60°C	Group II Category 3G Gases Protection type: nL Use in: Zone 2 T_a: -25° to 60°C
Electrical Connection *(see model code)*	4, 5, 6	4, 5, 6	4, 5, 6	4, 5, 6

HDA 4700 ATEX Series

High Pressure Transducer with High Accuracy Intrinsically Safe with ATEX Approval

Applications

Description

The pressure transmitter HDA 4700 in ATEX version has been specially developed for use in potentially explosive atmospheres and is based on the HDA 4000 series.

As with the industry model, the HDA 4700 in ATEX version has a stainless steel measurement cell with thin-film strain gauge for measuring relative pressure in the high pressure range.

Intended areas of application are, for example, in the oil and gas industry, in mining, on gas turbines or in locations with high levels of dust, e.g. in mills.

Special Features

- Accuracy ≤ ±0.25% BFSL
- Certificates:
  KEMA 05ATEX1016 X
  KEMA 05ATEX1021
- Output signal 4 to 20 mA
- Very small temperature error
- Excellent EMC characteristics
- Excellent long-term characteristics

Approvals

ATEX Approvals

1. I M1 EEx ia

2. II 1G EEx ia IIC T6
3. II 1/2 G EEx ia IIC T6
4. II 3G EEx nA II T4 IP65
5. II 3G EEx nL IIC T4
6. II 2G EEx ia IIC T6

7. II 1D IP6X T80°C
8. II 3D IP6X T80°C

CE mark is a mandatory conformity mark on many products placed on the single market in the European Economic Area

Ex mark is a specific marking for explosive protection equipment

Technical Details

Sensor Specifications		
Measuring Ranges - psi	150, 500, 750, 1000, 1500, 3000, 6000, 9000	
Overload Pressure - psi	290, 1160, 1160, 2900, 2900, 7250, 11600, 14500	
Burst Pressure - psi	1450, 2900, 2900, 7250, 7250, 14500, 29000, 29000	
Mechanical connection	G1/4A DIN 3852 male *(bar ranges only)* SAE 6 9/16-18 UNF2A *(psi ranges only)* other connections upon request	
Tightening torque	15 lb-ft (20 Nm)	
Parts in contact with media	Sensor: Stainless steel 1.4542 Mechanical connection: Stainless steel 1.4542, 1.4301, 1.4435, 1.4571, 1.4404, 316L, 304 Seal: FPM (SAE 6, G1/4)	
Accuracy (B.F.S.L.) including linearity, hysteresis, and repeatability	≤ ±0.25% BFSL	
Temperature compensation zero point	≤ ±0.0045% FS / °F typ.	≤ ±0.0085% FS / °F max.
Temperature compensation over range	≤ ±0.0045% FS / °F typ.	≤ ±0.0085% FS / °F max.
Rise time	≤ 2 ms	
Long-term drift	≤ ±0.1% FS typ. / year	
Life expectancy	10 million load cycles (0 to 100% FS)	
Weight	Approx. 150 g	
Output signal	4 to 20 mA, 2 wire, R_{Lmax} = (UB - 10V) / 20 mA [kΩ]	
Environmental Condition		
Compensated temperature range	T6/T80: -4° to 140°F	T4: -4° to 185°F
Operating temperature range	T6/T80: -4° to 140°F	T4: -4° to 185°F
Ambient temperature	T6/T80: -4° to 140°F	T4: -4° to 185°F
Media temperature range	T6/T80: 140°F	T4: 185°F
Storage temperature range	-40° to 212°F	
CE mark	EN 61000-6-1/2/3/4, EN 60079-0/11/26, IEC 61241-11	
Vibration resistance to DIN EN 60068-2-6 at 10 to 500 Hz	≤ 20g	
Environmental protection	IP 65 *(DIN 43650 and M18x1 connectors)* IP 67 *(ZBE 06 molded cable)*	
Electrical Specifications		
Supply voltage	12 to 28 VDC	
Residual ripple suppy voltage	≤ 5%	
Max supply current	100 mA	
Max supply power	up to 28V: 1 W	
Max capacitance of transmitter	≤ 12 nF	
Max inductance of transmitter	0 H	
Isolation voltage	125 VAC to housing *(standard)*	
Reverse polarity protection of the supply voltage, excess voltage, override and short circuit protection	Standard	

Model Code

HDA 4 7 X X - A - XXXX - A X X - 000 (PSI)

Mechanical Connection
4 = G1/4A DIN 3852 male *(bar only)*
7 = SAE 6 9/16-18 UNF2A *(psi only)*
Other connections upon request

Electrical Connection
4 = 4 pole plug M18x1, Binder Series *(connector not included)*
5 = DIN 43650/ISO 4400 plug, 3 pole + ground *(incudes ZBE 01)*
6 = M12x1 plug, 4 pole *(connector not included)*

Output Signal
A = 4-20mA, 2-wire

Pressure Range
HDA 478X psi version
0150, 0750, 1000, 1500, 3000, 5000, 6000, 9000

Approval
A = ATEX *(for details see description of approvals)*

Isolation Voltage
N = 125 VAC to housing *(standard)*

Types of Protection and Application Areas *(see chart below)*
1 = I M1 EEx ia
II 1G EEx ia IIC T6
II 1/2 G EEx ia IIC T6
II 2G EEx ia IIC T6
7 = II 3G EEx nL IIC T4
Other protection types upon request

Modification Number
000 = Standard

(psi)
psi version *(leave blank for bar version)*

Pin Connections

Binder 714 M18

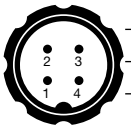

Pin	47X4-A
1	nc
2	Signal +
3	Signal -
4	nc

DIN 43650

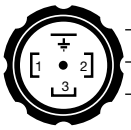

Pin	47X5-A
1	Signal +
2	Signal -
3	nc
4	PE

M12x1, 4 pole

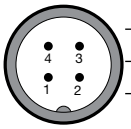

Pin	47X6-A
1	Signal +
2	nc
3	Signal -
4	nc

Dimensions

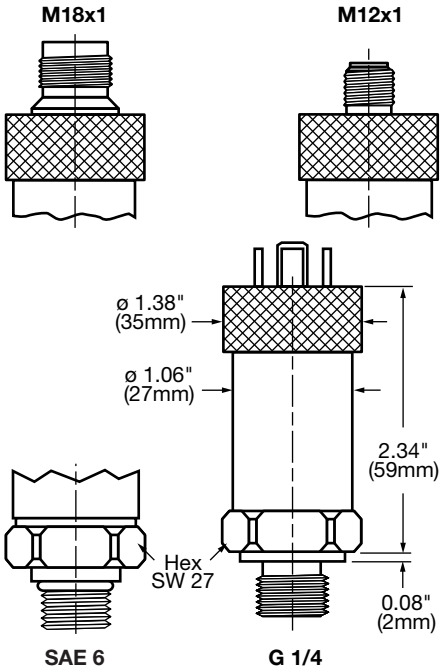

Application Areas

Code Type Code	1	1	1	7
Protection class	I M1 EEx ia	II 1G EEx ia IIC T6 II 1/2G EEx ia IIC T6	II 2G EEx ia IIC T6	II 3G EEx nL IIC T4
Certificate number	KEMA 05ATEX1016X	KEMA 05ATEX1016X	KEMA 05ATEX1016X	KEMA 05ATEX1021
Zones / Categories	Group I Category M 1 mining Protection type: intrinsically safe ia with barrier T_a: -25° to 60°C	Group II Category 1G, 1/2G Gases Protection type: intrinsically safe ia with barrier Use in: Zone 0 Retrofit in Zone 0 T_a: -25° to 60°C	Group II Category 2G Gases Protection type: intrinsically safe ia with barrier Use in: Zone 1 & 2 T_a: -25° to 60°C	Group II Category 3G Gases Protection type: nL Use in: Zone 2 T_a: -25° to 60°C
Electrical Connection *(see model code)*	4, 5, 6	4, 5, 6	4, 5, 6	4, 5, 6

EDS 4100 Programmable Series

Absolute Pressure Switch
Intrinsically Safe with ATEX Approval

Applications

Description

The programmable pressure switch EDS 4100 in ATEX version, has been specially developed for use in potentially explosive atmospheres, and is based on the EDS 4000 series.

The switching point and reset point, the function of the switching outputs as N/C or N/O and the switching delay are user programmable with the HYDAC Programming Unit HPG 3000.

As with the industry model, the programmable EDS 4100 in ATEX version has a ceramic measurement cell with thick-film strain gauge for measuring absolute pressure in the low pressure range.

Special Features

- Switching point and switch-back point user-programmable
- Accuracy ≤ ±0.5% BFSL
- Certificates:
  DEKRA EXAM BVS 07 ATEX E 041 X
- Very small temperature error
- Excellent EMC characteristics
- Excellent long-term properties

Approvals

ATEX Approvals

I M1 Ex ia I

II 1G Ex ia IIC T4, T5, T6
II 1/2G Ex ia IIC T4, T5, T6
II 2G Ex ia IIC T4, T5, T6

II 1D Ex iaD 20 T00°C

CE mark is a mandatory conformity mark on many products placed on the single market in the European Economic Area

Ex mark is a specific marking for explosive protection equipment

Technical Details

Sensor Specifications		
Measuring ranges - psi	15, 50	
Overload pressure - psi	40, 150	
Burst pressure - psi	70, 250	
Mechanical connection	G1/4A DIN 3852 male *(bar ranges only)* 1/4”-18 NPT male *(psi ranges only)* other connections upon request	
Tightening torque	G1/4: 15 lb-ft (20 Nm) 1/4” NPT: 30 lb-ft (40 Nm)	
Parts in contact with media	Sensor: Ceramic Mechanical connection: Stainless steel Seal: FPM or EPDM	
Accuracy (B.F.S.L.) including linearity, hysteresis, and repeatability	≤ ±0.5% BFSL.	
Temperature compensation zero point	≤ ±0.0085% / °F typ.	≤ ±0.017% / °F max.
Temperature compensation over range	≤ ±0.0085% / °F typ.	≤ ±0.017% / °F max.
Long-term drift	≤ ±0.3% FS typ. / year	
Life expectancy	10 million load cycles (0 to 100% FS)	
Weight	Approximately 150 g	
Switching Specifications		
Type	1 x PNP transistor output	
Repeatability	≤ ±0.1% FS max.	
Switching current	Max. 34 mA	
Set point / reset point / NO / NC	Programmed using HPG 3000 Programming Unit	
Switch on/off delay	8 to 2000 ms programmed using HPG 3000	
Switching cycles	≥ 100 million	
Environmental Condition		
Compensated temperature range	T6: -4° to 140°F T4/T5: -4° to 158°F	T100: -4° to 185°F
Operating temperature range	T6: -4° to 140°F T4/T5: -4° to 158°F	T100: -4° to 185°F
Ambient temperature	T6: -4° to 140°F T4/T5: -4° to 158°F	T100: -4° to 185°F
Storage temperature range	-40° to 212°F	
Media temperature range	T6: -4° to 140°F T4/T5: -4° to 158°F	T100: -4° to 185°F
CE mark	EN 61000-6-1 / 2 / 3 / 4, EN 60079-0 / 11 / 26, IEC 61241-11	
Vibration resistance to DIN EN 60068-2-6 at 10 to 500 Hz	≤ 20g	
Environmental Protection	IP 67 *(M12x1, when an IP 67 connector is used)*	
Electrical Specifications		
Supply voltage	14 to 28 VDC	
Residual ripple suppy voltage	≤ 5%	
	I M1 / II 1G, 1/2G, 2G	**II 1D**
Max input current	100 mA	93 mA
Max input	0.7 W	0.65 W
Max capacitance of transmitter	33 nF	33 nF
Max inductance of transmitter	0 H	0 H
Isolation Voltage	125 VAC to housing *(standard)*	
Reverse polarity protection of the supply voltage, excess voltage, override and short circuit protection	Standard	

Model Code

EDS 4 1 X 8 - XXXX - X - A X X - 000 - X1 (PSI)

Mechanical Connection
4 = G1/4A DIN 3852 male *(bar ranges only)*
8 = 1/4"-18 NPT *(psi ranges only)*
Other connections upon request

Electrical Connection
8 = M12x1 plug, 5 pole *(connector not included)*

Pressure Range
For EDS 4186 *(1/4"-18 NPT only)*
0015, 0050 psi

Switching Output
P = Programmable

Approval
A = ATEX *(for details see description of approvals)*

Isolation Voltage
N = 125 VAC to housing *(standard)*

Types of Protection and Application Areas
1 = I M1 Ex ia I
2 = II 1G Ex ia IIC T4, T5, T6
3 = II 1/2 G Ex ia IIC T4, T5, T6 / II 2G Ex ia IIC T4, T5, T6
8 = II 1D Ex iaD 20 T100°C

Modification Number
000 = Standard

Seal Material
F1 = FPM Seal *(hydraulic oil)*
E1 = EPDM Seal *(coolant, ammonia, water)*

(psi)
psi version *(Leave blank for bar version)*

Adjustment Ranges

Set point in psi	5% to 100% of measuring ranges
Hysteresis in psi	1% to 96% of measuring ranges

Application Areas

Code Type Code	1	2	3	8
Protection class	I M1 Ex ia I	II 1G Ex ia IIC T4, T5, T6	II 2G Ex ia IIC II 1/2G Ex ia IIC T4, T5, T6	II 1D Ex iaD 20 T100 °C
Certificate number	DEKRA EXAM BVS 07 ATEX E 041 X	DEKRA EXAM BVS 07 ATEX E 041 X	DEKRA EXAM BVS 07 ATEX E 041 X	DEKRA EXAM BVS 07 ATEX E 041 X
Zones / Categories	Group I Category M1 Mining Protection type: intrinsically safe ia with barrier	Group II Category 1G Gases Protection type: intrinsically safe ia with barrier Use in Zone 0 T4, T5: T_a = 70°C T6: T_a = 60°C	Group II Category 2G, 1/2G Gases Protection type: intrinsically safe ia with barrier Use in Zone 1, 2 Retrofit in Zone 0 T4, T5: T_a = 70°C T6: T_a = 60°C	Group II Category iD Dusts Protection type: intrinsically safe ia with barrier Use in Zone 20, 21, 22 Retrofit in Zone 20 T100: T_a = 85°C
Electrical Connection *(see model code)*	8	8	8	8

Pin Connections

M12x1, 5 pole

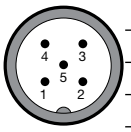

Pin	Process Connection	HPG Connection
1	$+U_B$	$+U_B$
2	0 V	COM port 1
3	0 V	0 V
4	Out 1	nc
5	0 V	COM port 2

In process a 4 pole mating connector (e.g. ZBE 06) has to be used.

Dimensions

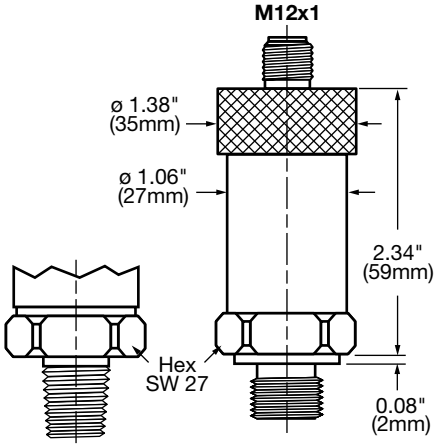

HPG 3000 Programming Unit

Manual available online
Part #00909422

ZBE 30-02

Part #06040851

HPG 3000 Power Supply with Connector

Part #02091103

EDS 4300 Programmable Series

Low Pressure Transducer
Intrinsically Safe with ATEX Approval

Applications

Description

The programmable electronic pressure switch EDS 4300 in ATEX version, has been specially developed for use in potentially explosive atmospheres, and is based on the EDS 4000 series.

The switching point and reset point, the function of the switching outputs as N/C or N/O and the switching delay are user programmable with the HYDAC Programming Unit HPG 3000.

As with the industry model, the programmable EDS 4300 in ATEX version has a ceramic measurement cell with thick-film strain gauge for measuring relative pressure in the low pressure range.

Special Features

- Switching point and switch-back point user-programmable
- Accuracy ≤ ±0.5% BFSL
- Certificates:
  DEKRA EXAM BVS 07 ATEX E 041 X
- Very small temperature error
- Excellent EMC characteristics
- Excellent long-term properties

Approvals

ATEX Approvals

I M1 Ex ia I

II 1G Ex ia IIC T4, T5, T6
II 1/2G Ex ia IIC T4, T5, T6
II 2G Ex ia IIC T4, T5, T6

II 1D Ex iaD 20 T00°C

CE mark is a mandatory conformity mark on many products placed on the single market in the European Economic Area

Ex mark is a specific marking for explosive protection equipment

Technical Details

Sensor Specifications		
Measuring ranges - psi	15, 50, 100, 150, 250, 500	
Overload pressure - psi	45, 150, 290, 450, 725, 1500	
Burst pressure - psi	70, 250, 400, 650, 1000, 2500	
Mechanical connection	G1/4A DIN 3852 male *(bar ranges only)* 1/4”-18 NPT male *(psi ranges only)* other connections upon request	
Tightening torque	G1/4: 15 lb-ft (20 Nm) 1/4” NPT: 30 lb-ft (40 Nm)	
Parts in contact with media	Sensor: Ceramic Mechanical connection: Stainless steel Seal: FPM or EPDM	
Accuracy (B.F.S.L.) including linearity, hysteresis, and repeatability	≤ ±0.5% BFSL.	
Temperature compensation zero point	≤ ±0.0085% / °F typ.	≤ ±0.017% / °F max.
Temperature compensation over range	≤ ±0.0085% / °F typ.	≤ ±0.017% / °F max.
Long-term drift	≤ ±0.3% FS typ. / year	
Life expectancy	10 million load cycles (0 to 100% FS)	
Weight	Approximately 150 g	
Switching Specifications		
Type	1 x PNP transistor output	
Repeatability	≤ ±0.1% FS max.	
Switching current	Max. 34 mA	
Set point / reset point / NO / NC	Programmed using HPG 3000 Programming Unit	
Switch on/off delay	8 to 2000 ms programmed using HPG 3000	
Switching cycles	≥ 100 million	
Environmental Condition		
Compensated temperature range	T6: -4° to 140°F T4/T5: -4° to 158°F	T100: -4° to 185°F
Operating temperature range	T6: -4° to 140°F T4/T5: -4° to 158°F	T100: -4° to 185°F
Ambient temperature	T6: -4° to 140°F T4/T5: -4° to 158°F	T100: -4° to 185°F
Storage temperature range	-40° to 212°F	
Media temperature range	T6: -4° to 140°F T4/T5: -4° to 158°F	T100: -4° to 185°F
CE mark	EN 61000-6-1 / 2 / 3 / 4, EN 60079-0 / 11 / 26, IEC 61241-11	
Vibration resistance to DIN EN 60068-2-6 at 10 to 500 Hz	≤ 20g	
Environmental protection	IP 67 *(M12x1, when an IP 67 connector is used)*	
Electrical Specifications		
Supply voltage	14 to 28 VDC	
Residual ripple suppy voltage	≤ 5%	
	I M1 / II 1G, 1/2G, 2G	**II 1D**
Max input current	100 mA	93 mA
Max input	0.7 W	0.65 W
Max capacitance of transmitter	33 nF	33 nF
Max inductance of transmitter	0 H	0 H
Isolation voltage	125 VAC to housing *(standard)*	
Reverse polarity protection of the supply voltage, excess voltage, override and short circuit protection	Standard	

Model Code

EDS 4 3 X 8 - XXXX - X - A X X - 000 - X1 (PSI)

Mechanical Connection
4 = G1/4A DIN 3852 male *(bar ranges only)*
8 = 1/4"-18 NPT *(psi ranges only)*
Other connections upon request

Electrical Connection
8 = M12x1 plug, 5 pole *(connector not included)*

Pressure Range
EDS 438X *(1/4"-18 NPT only)*
0015, 0050, 0100 0150, 0250, 0500 psi

Switching Output
P = Programmable

Approval
A = ATEX *(for details see description of approvals)*

Isolation Voltage
N = 125 VAC to housing *(standard)*

Types of Protection and Application Areas
1 = I M1 Ex ia I
2 = II 1G Ex ia IIC T4, T5, T6
3 = II 1/2 G Ex ia IIC T4, T5, T6 / II 2G Ex ia IIC T4, T5, T6
8 = II 1D Ex iaD 20 T100°C

Modification Number
000 = Standard

Seal Material
F1 = FPM Seal *(hydraulic oil)*
E1 = EPDM Seal *(coolant, ammonia, water)*

(psi)
psi version *(Leave blank for bar version)*

Adjustment Ranges

Set point in psi	5% to 100% of measuring ranges
Hysteresis in psi	1% to 96% of measuring ranges

Application Areas

Code Type Code	1	2	3	8
Protection class	I M1 Ex ia I	II 1G Ex ia IIC T4, T5, T6	II 2G Ex ia IIC II 1/2G Ex ia IIC T4, T5, T6	II 1D Ex iaD 20 T100 °C
Certificate number	DEKRA EXAM BVS 07 ATEX E 041 X	DEKRA EXAM BVS 07 ATEX E 041 X	DEKRA EXAM BVS 07 ATEX E 041 X	DEKRA EXAM BVS 07 ATEX E 041 X
Zones / Categories	Group I Category M1 Mining Protection type: intrinsically safe ia with barrier	Group II Category 1G Gases Protection type: intrinsically safe ia with barrier Use in Zone 0 T4, T5: T_a = 70°C T6: T_a = 60°C	Group II Category 2G, 1/2G Gases Protection type: intrinsically safe ia with barrier Use in Zone 1, 2 Retrofit in Zone 0 T4, T5: T_a = 70°C T6: T_a = 60°C	Group II Category iD Dusts Protection type: intrinsically safe ia with barrier Use in Zone 20, 21, 22 Retrofit in Zone 20 T100: T_a = 85°C
Electrical Connection *(see model code)*	8	8	8	8

Pin Connections

M12x1, 5 pole

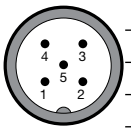

Pin	Process Connection	HPG Connection
1	$+U_B$	$+U_B$
2	0 V	COM port 1
3	0 V	0 V
4	Out 1	nc
5	0 V	COM port 2

In process a 4 pole mating connector (e.g. ZBE 06) has to be used.

Dimensions

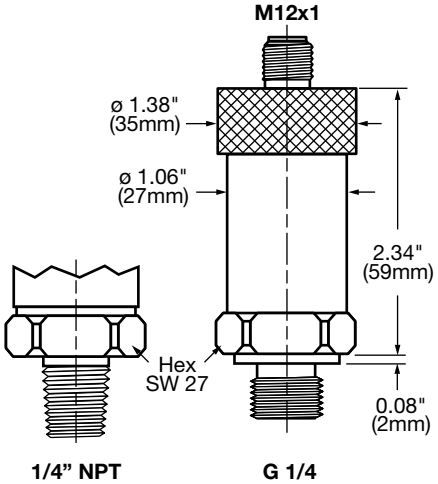

HPG 3000 Programming Unit

Manual available online
Part #00909422

ZBE 30-02

Part #06040851

HPG 3000 Power Supply with Connector

Part #02091103

EDS 4400 Programmable Series

High Pressure Transducer with Medium Accuracy Intrinsically Safe with ATEX Approval

Applications

Description

The programmable electronic pressure switch EDS 4400 in ATEX version, has been specially developed for use in potentially explosive atmospheres, and is based on the EDS 4000 series.

The switching point and reset point, the function of the switching outputs as N/C or N/O and the switching delay are user programmable with the HYDAC Programming Unit HPG 3000.

As with the industry model, the programmable EDS 4400 in ATEX version has a stainless steel measurement cell with thin-film strain gauge for measuring relative pressure in the high pressure range.

Special Features

- Switching point and switch-back point user-programmable
- Accuracy ≤ ±0.5% BFSL
- Certificates: DEKRA EXAM BVS 07 ATEX E 041 X
- Very small temperature error
- Excellent EMC characteristics
- Excellent long-term characteristics

Approvals

ATEX Approvals

I M1 Ex ia I

II 1G Ex ia IIC T4, T5, T6
II 1/2G Ex ia IIC T4, T5, T6
II 2G Ex ia IIC T4, T5, T6

II 1D Ex iaD 20 T00°C

CE mark is a mandatory conformity mark on many products placed on the single market in the European Economic Area

Ex mark is a specific marking for explosive protection equipment

Technical Details

Sensor Specifications		
Measuring ranges - psi	1000, 3000, 6000, 9000	
Overload pressure - psi	2900, 7250, 11600, 14500	
Burst pressure - psi	7250, 14500, 29000, 29000	
Adjustment pressure range - psi	Min 50, 75, 150, 300, 450 Max 980, 1470, 2940, 5880, 8820	
Mechanical connection	G1/4A DIN 3852 male *(bar ranges only)* SAE 6 9/16-18 UNF 2A *(psi ranges only)* other connections upon request	
Tightening torque	15 lb-ft (20 Nm)	
Parts in contact with media	Sensor: Stainless steel 1.4542 Mechanical connection: Stainless steel 1.4542, 1.4301, 1.4435, 1.4571, 1.4404, 316L, 304 Seal: FPM (SAE 6, G1/4)	
Accuracy (B.F.S.L.) including linearity, hysteresis, and repeatability	≤ ±0.5% BFSL.	
Temperature compensation zero point	≤ ±0.0085% / °F typ.	≤ ±0.017% / °F max.
Temperature compensation over range	≤ ±0.0085% / °F typ.	≤ ±0.017% / °F max.
Long-term drift	≤ ±0.3% FS typ. / year	
Life expectancy	10 million load cycles (0 to 100% FS)	
Weight	Approximately 150 g	
Switching Specifications		
Type	1 x PNP transistor output	
Repeatability	≤ ±0.1% FS max.	
Switching current	Max. 34 mA	
Set point / reset point / NO / NC	Programmed using HPG 3000 Programming Unit	
Switch on/off delay	8 to 2000 ms programmed using HPG 3000	
Switching cycles	≥ 100 million	
Environmental Condition		
Compensated temperature range	T6: -4° to 140°F T4/T5: -4° to 158°F	T100: -4° to 185°F
Operating temperature range	T6: -4° to 140°F T4/T5: -4° to 158°F	T100: -4° to 185°F
Ambient temperature	T6: -4° to 140°F T4/T5: -4° to 158°F	T100: -4° to 185°F
Storage temperature range	-40° to 212°F	
Media temperature range	T6: -4° to 140°F T4/T5: -4° to 158°F	T100: -4° to 185°F
CE mark	EN 61000-6-1 / 2 / 3 / 4, EN 60079-0 / 11 / 26, IEC 61241-11	
Vibration resistance to DIN EN 60068-2-6 at 10 to 500 Hz	≤ 20g	
Environmental Protection	IP 67 *(M12x1, when an IP 67 connector is used)*	
Electrical Specifications		
Supply voltage	14 to 28 VDC	
Residual ripple suppy voltage	≤ 5%	
	I M1 / II 1G, 1/2G, 2G	**II 1D**
Max input current	100 mA	93 mA
Max input	0.7 W	0.65 W
Max capacitance of transmitter	33 nF	33 nF
Max inductance of transmitter	0 H	0 H
Isolation voltage	125 VAC to housing *(standard)*	
Reverse polarity protection of the supply voltage, excess voltage, override and short circuit protection	Standard	

Model Code

EDS 4 4 X 8 - XXXX - X - A X X - 000 (PSI)

Mechanical Connection
4 = G1/4A DIN 3852 male *(bar ranges only)*
7 = SAE 6 9/16-18 UNF2A *(psi ranges only)*
Other connections upon request

Electrical Connection
8 = M12x1 plug, 5 pole *(connector not included)*

Pressure Range
For EDS 447X *(SAE 6 9/16-20 only)*
1000, 3000, 6000, 9000 psi

Switching Output
P = Programmable

Approval
A = ATEX *(for details see description of approvals)*

Isolation Voltage
N = 125 VAC to housing *(standard)*

Types of Protection and Application Areas
1 = I M1 Ex ia I
2 = II 1G Ex ia IIC T4, T5, T6
3 = II 1/2 G Ex ia IIC T4, T5, T6 / II 2G Ex ia IIC T4, T5, T6
8 = II 1D Ex iaD 20 T100°C

Modification Number
000 = Standard

(psi)
psi version *(Leave blank for bar version)*

Pin Connections

M12x1, 5 pole

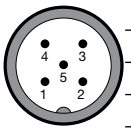

Pin	Process Connection	HPG Connection
1	$+U_B$	$+U_B$
2	0 V	COM port 1
3	0 V	0 V
4	Out 1	nc
5	0 V	COM port 2

In process a 4 pole mating connector (e.g. ZBE 06) has to be used.

Dimensions

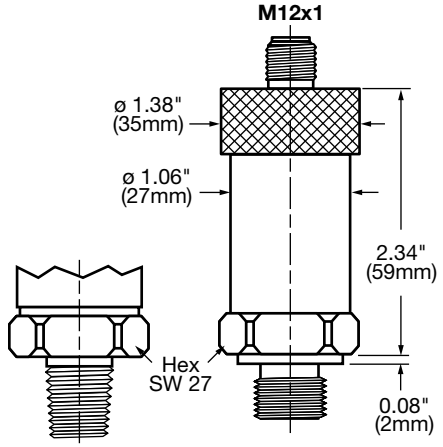

Adjustment Ranges

Set point in psi	5% to 100% of measuring ranges
Hysteresis in psi	1% to 96% of measuring ranges

Application Areas

Code Type Code	1	2	3	8
Protection class	I M1 Ex ia I	II 1G Ex ia IIC T4, T5, T6	II 2G Ex ia IIC II 1/2G Ex ia IIC T4, T5, T6	II 1D Ex iaD 20 T100 °C
Certificate number	DEKRA EXAM BVS 07 ATEX E 041 X	DEKRA EXAM BVS 07 ATEX E 041 X	DEKRA EXAM BVS 07 ATEX E 041 X	DEKRA EXAM BVS 07 ATEX E 041 X
Zones / Categories	Group I Category M1 Mining Protection type: intrinsically safe ia with barrier	Group II Category 1G Gases Protection type: intrinsically safe ia with barrier Use in Zone 0 T4, T5: T_a = 70°C T6: T_a = 60°C	Group II Category 2G, 1/2G Gases Protection type: intrinsically safe ia with barrier Use in Zone 1, 2 Retrofit in Zone 0 T4, T5: T_a = 70°C T6: T_a = 60°C	Group II Category iD Dusts Protection type: intrinsically safe ia with barrier Use in Zone 20, 21, 22 Retrofit in Zone 20 T100: T_a = 85°C
Electrical Connection *(see model code)*	8	8	8	8

HPG 3000 Programming Unit

Manual available online
Part #00909422

ZBE 30-02

Part #06040851

HPG 3000 Power Supply with Connector

Part #02091103

HDA 4100 Series

Absolute Pressure Transducer
Intrinsically Safe with CSA Approval

Applications

Description

The pressure transmitter HDA 4100 in CSA version has been specially developed for the North American market for use in potentially explosive atmospheres and is based on the HDA 4000 series.

As with the industry model, the HDA 4100 in CSA version has a ceramic measurement cell with thick film strain gauge for measuring absolute pressure in the low pressure range.

Intended areas of application are, for example, in the oil and gas industry, on gas turbines or in locations with high levels of dust, e.g. in mills.

Special Features

- Accuracy ≤ ±0.5% BFSL
- Certificate: CSA 1760344
- Output signal 4 to 20 mA
- Very small temperature error
- Excellent EMC characteristics
- Excellent long-term properties

Approvals

Intrinsically Safe *(all connector versions)*:
Class I Division 1 Group A, B, C, D T6 [C, US]
Class I Zone 0 AEx ia IIC T6 [US]
Ex ia IIC T6 [C]

Intrinsically safe *(connectors: 9, A only)*:
Class I, II, III Division 1 Group A, B, C, D, E, F, G T6 [C, US]

Non incendive *(all connector versions)*:
Class I Division 2 Group A, B, C, D, T4A [C, US]
Class I Zone 2 AEx nL IIC T4 [US]
Class I Zone 2 Ex nL IIC T4 [C]

Non incendive *(connectors: 9 only)*:
Class I, II, III Division 2 Group A, B C, D, F, T4A [C, US]
Class I Zone 2 AEx nA II T4 [US]
Class I Zone 2 Ex nA II T4 [C]

CE mark is a mandatory conformity mark on many products placed on the single market in the European Economic Area

CSA mark is for products sold both in the U.S.A. and Canada

Technical Details

Sensor Specifications	
Measuring ranges	15, 50
Overload pressure	40, 150
Burst pressure	70, 250
Mechanical connection	G1/4A DIN 3852 male *(bar ranges only)* 1/4"-18 NPT male *(psi ranges only)*
Tightening torque	G1/4: 15 lb-ft (20 Nm) 1/4" NPT: 30 lb-ft (40 Nm)
Parts in contact with media	Sensor: Ceramic Mechanical connection: Stainless steel Seal: FPM or EPDM
Accuracy (B.F.S.L.) including linearity, hysteresis, and repeatability	≤ ± 0.5% BFSL.
Temperature compensation zero point	≤ ±0.012% / °F typ. ≤ ±0.017% / °F max.
Temperature compensation over range	≤ ±0.012% / °F typ. ≤ ±0.017% / °F max.
Rise time	≤ 2 ms
Long-term drift	≤ ± 0.3% FS typ. / year
Life expectancy	10 million load cycles (0 to 100% FS)
Weight	Approximately 180 g
Output signal	4 to 20 mA, 2 wire, R_{Lmax} = (UB - 10V) / 20 mA [kΩ]
Environmental Condition	
Type of protection: intrinsically safe	
Compensated temperature range	-4° to 140°F (-20° to 60°C)
Operating temperature range	-4° to 140°F (-20° to 60°C)
Storage temperature range	-40° to 212°F (-40° to 100°C)
Media temperature range	-4° to 140°F (-20° to 60°C)
Type of protection: enclosures against dust non-incendive	
Compensated temperature range	-4° to 185°F (-20° to 85°C)
Operating temperature range	-4° to 185°F (-20° to 85°C)
Storage temperature range	-40° to 212°F (-40° to 100°C)
Media temperature range	-4° to 185°F (-20° to 85°C)
CSA mark	Certificat number: CSA 1760344
Vibration resistance to DIN EN 60068-2-6 at 10 to 500 Hz	≤ 20g
Environmental protection	min. IP 65 / NEMA 4
Electrical Specifications	
Supply voltage	12 to 28 VDC
Residual ripple suppy voltage	≤ 5%
Max supply current	approximately 100 mA
Max supply power	up to 28V: 1 W
Max capacitance of transmitter	≤ 12 nF
Max inductance of transmitter	0 H
Isolation voltage	125 VAC to housing *(standard)*
Reverse polarity protection of the supply voltage, excess voltage, override and short circuit protection	Standard

Model Code

HDA 4 1 X X - A - XXXX - C X X - XXX - X1 (PSI) XX in

Mechanical Connection
4 = G1/4A DIN 3852 male *(bar ranges only)*
8 = 1/4”-18 NPT *(psi ranges only)*

Electrical Connection
9 = Conduit connection 1/2”-14 NPT male, 48” flying leads
A = DIN 43650/ISO 4400 plug, 3 pole + PE, 1/2” Conduit female
5 = DIN 43650/ISO 4400 plug, 3 pole + ground *(incudes ZBE 01)*
6 = M12x1 plug, 4 pole *(connector not included)*

Output Signal
A = 4-20mA, 2-wire

Pressure Range
for HDA 418x *(1/4”-18 NPT only)*
0015, 0050 psi

Approval
C = CSA *(for details see description of approvals)*

Isolation Voltage
N = 125 VAC to housing *(standard)*

Types of protection and application areas *(see chart below)*
A = Group 1
B = Groups 2 and 3
C = Group 4

Modification Number
000= Standard
(other number used e.g. for: version with long housing, snubber, pin wiring, connector on flying leads)

Seal Material
F1 = FPM Seal *(hydraulic oil)*
E1 = EPDM Seal *(coolant, ammonia, water)*

(psi)
psi version *(Leave blank for bar version)*

Cable Length
XX = 48” standard *(type 9 electrical connection only)*

Application Areas

Code Type Code	1	2	3	4
Protection class	Intrinsically safe Use in gases and dust	Intrinsically safe Use in gases	Non incendive with field wiring Use in gases	Non incendive Use in gases and dust
Certificate number	1760344			
Zones / Categories	Intrinsically safe Class I, II, III Division 1 Group A, B, C, D, E, F, G T6	Intrinsically safe Ex ia IIC T6 Class I Zone 0 AEx ia IIC T6 Class I Division 1 Group A, B, C, D T6	Non incendive Class I Division 2 Group A, B, C, D, T4A Class I Zone 2 AEx nL IIC T4 Class I Zone 2 Ex nL IIC T4	Non incendive Class I, II, III Division 2 Group A, B, C, D, F, G, T4A Class I Zone 2 Ex nA II T4 Class I Zone 2 AEx nA II T4
Electrical Connection *(see model code)*	9; A	5; 6; 9; A		9
Model code - characteristic	A	B		C

Pin Connections

DIN 43650

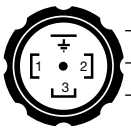

Pin	41X5-A	41XA-A
1	Signal +	Signal +
2	Signal -	Signal -
3	nc	nc
4	PE	PE

M12x1, 4 pole

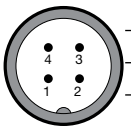

Pin	41x6-A
1	Signal +
2	nc
3	Signal -
4	nc

Dimensions

Conduit Connection Flying Leads

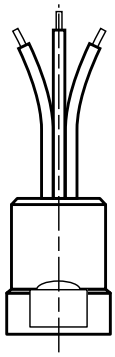

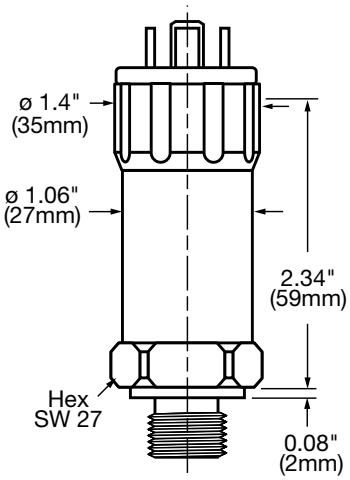

G 1/4

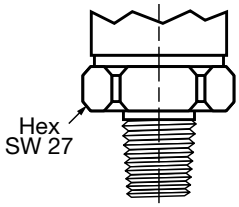

1/4” NPT

HDA 4300 Series

Low Pressure Transducer
Intrinsically Safe with CSA Approval

Applications

Description

The pressure transmitter HDA 4300 in CSA version has been specially developed for the North American market for use in potentially explosive atmospheres and is based on the HDA 4000 series.

As with the industry model, the HDA 4300 in CSA version has a ceramic measurement cell with thick film strain gauge for measuring absolute pressure in the low pressure range.

Intended areas of application are, for example, in the oil and gas industry, on gas turbines or in locations with high levels of dust, e.g. in mills.

Special Features

- Accuracy ≤ ±0.5% BFSL
- Certificate: CSA 1760344
- Output signal 4 to 20 mA
- Very small temperature error
- Excellent EMC characteristics
- Excellent long-term properties

Approvals

Intrinsically Safe *(all connector versions)*:
Class I Division 1 Group A, B, C, D T6 [C, US]
Class I Zone 0 AEx ia IIC T6 [US]
Ex ia IIC T6 [C]

Intrinsically safe *(connectors: 9, A only)*:
Class I, II, III Division 1 Group A, B, C, D, E, F, G T6 [C, US]

Non incendive *(all connector versions)*:
Class I Division 2 Group A, B, C, D, T4A [C, US]
Class I Zone 2 AEx nL IIC T4 [US]
Class I Zone 2 Ex nL IIC T4 [C]

Non incendive *(connectors: 9 only)*:
Class I, II, III Division 2 Group A, B C, D, F, T4A [C, US]
Class I Zone 2 AEx nA II T4 [US]
Class I Zone 2 Ex nA II T4 [C]

CE mark is a mandatory conformity mark on many products placed on the single market in the European Economic Area

CSA mark is for products sold both in the U.S.A. and Canada

Technical Details

Sensor Specifications	
Measuring Ranges - psi	15, 30, 50, 100, 150, 250, 500
Overload Pressure - psi	45, 100, 150, 290, 450, 725, 1500
Burst Pressure - psi	70, 150, 250, 400, 650, 1000, 2500
Mechanical Connection	G1/4A DIN 3852 male *(bar ranges only)* 1/4"-18 NPT male *(psi ranges only)*
Tightening Torque	G1/4: 15 lb-ft (20 Nm) 1/4" NPT: 30 lb-ft (40 Nm)
Parts in Contact with Media	Sensor: Ceramic Mechanical connection: Stainless steel Seal: FPM or EPDM
Accuracy (B.F.S.L.) including linearity, hysteresis, and repeatability	≤ ± 0.5% BFSL.
Temperature compensation zero point	≤ ±0.012% / °F typ. ≤ ±0.017% / °F max.
Temperature compensation over range	≤ ±0.012% / °F typ. ≤ ±0.017% / °F max.
Rise time	≤ 2 ms
Long-term drift	≤ ± 0.3% FS typ. / year
Life Expectancy	10 million load cycles (0 to 100% FS)
Weight	Approximately 180 g
Output Signal	4 to 20 mA, 2 wire, R_{Lmax} = (UB - 10V) / 20 mA [kΩ]
Environmental Condition	
Type of protection: intrinsically safe	
Compensated temperature range	-4° to 140°F (-20° to 60°C)
Operating temperature range	-4° to 140°F (-20° to 60°C)
Storage temperature range	-40° to 212°F (-40° to 100°C)
Media temperature range	-4° to 140°F (-20° to 60°C)
Type of protection: enclosures against dust non-incendive	
Compensated temperature range	-4° to 185°F (-20° to 85°C)
Operating temperature range	-4° to 185°F (-20° to 85°C)
Storage temperature range	-40° to 212°F (-40° to 100°C)
Media temperature range	-4° to 185°F (-20° to 85°C)
CSA mark	Certificat Number: CSA 1760344
Vibration resistance to DIN EN 60068-2-6 at 10 to 500 Hz	≤ 20g
Environmental Protection	min. IP 65 / NEMA 4
Electrical Specifications	
Supply voltage	12 to 28 VDC
Residual ripple suppy voltage	≤ 5%
Max supply current	approximately 100 mA
Max supply power	up to 28V: 1 W
Max capacitance of transmitter	≤ 12 nF
Max inductance of transmitter	0 H
Isolation Voltage	125 VAC to housing *(standard)*
Reverse polarity protection of the supply voltage, excess voltage, override and short circuit protection	Standard

Model Code

HDA 4 3 X X - A - XXXX - C X X - XXX - X1 (PSI) XX in

Mechanical Connection
4 =G1/4A DIN 3852 male *(bar ranges only)*
8 =1/4"-18 NPT *(psi ranges only)*

Electrical Connection
9 =Conduit connection 1/2"-14 NPT male, 48" flying leads
A =DIN 43650/ISO 4400 plug, 3 pole + PE, 1/2" Conduit female
5 =DIN 43650/ISO 4400 plug, 3 pole + ground *(incudes ZBE 01)*
6 =M12x1 plug, 4 pole *(connector not included)*

Output Signal
A =4-20mA, 2-wire

Pressure Range
for HDA 438x *(1/4"-18 NPT only)*
0015, 0030, 0050, 0100, 0150, 0250, 0500 psi

Approval
C =CSA *(for details see description of approvals)*

Isolation Voltage
N =125 VAC to housing *(standard)*

Types of protection and application areas *(see chart below)*
A =Group 1
B =Group 2 and 3
C =Group 4

Modification Number
000=Standard
(other number used e.g. for: version with long housing, snubber, pin wiring, connector on flying leads)

Seal Material
F1 =FPM Seal *(hydraulic oil)*
E1 =EPDM Seal *(coolant, ammonia, water)*

(psi)
psi version *(Leave blank for bar version)*

Cable Length
XX =48" standard *(type 9 electrical connection only)*

Pin Connections

DIN 43650

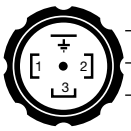

Pin	43X5-A	43XA-A
1	Signal +	Signal +
2	Signal -	Signal -
3	nc	nc
4	PE	PE

M12x1, 4 pole

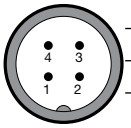

Pin	43x6-A
1	Signal +
2	nc
3	Signal -
4	nc

Dimensions

Conduit Connection Flying Leads

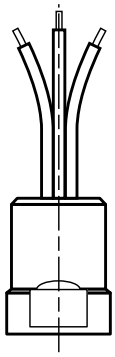

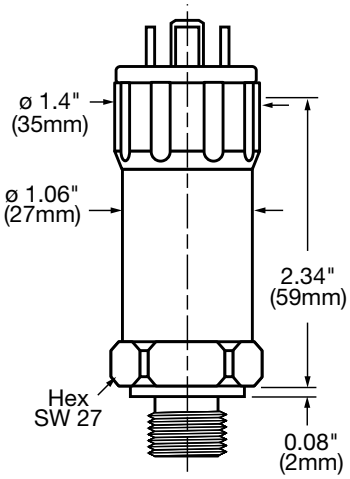

G 1/4

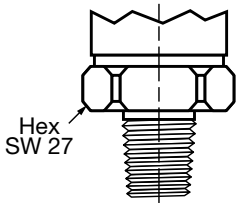

1/4" NPT

Application Areas

Code Type Code	1	2	3	4
Protection class	Intrinsically safe Use in gases and dust	Intrinsically safe Use in gases	Non incendive with field wiring Use in gases	Non incendive Use in gases and dust
Certificate number	1760344			
Zones / Categories	Intrinsically safe Class I, II, III Division 1 Group A, B, C, D, E, F, G T6	Intrinsically safe Ex ia IIC T6 Class I Zone 0 AEx ia IIC T6 Class I Division 1 Group A, B, C, D T6	Non incendive Class I Division 2 Group A, B, C, D, T4A Class I Zone 2 AEx nL IIC T4 Class I Zone 2 Ex nL IIC T4	Non incendive Class I, II, III Division 2 Group A, B, C, D, F, G, T4A Class I Zone 2 Ex nA II T4 Class I Zone 2 AEx nA II T4
Electrical Connection *(see model code)*	9; A	4; 5; 6; 9; A		9
Model code - characteristic	A	B		C

HDA 4700 Series

High Pressure Transducer
Intrinsically Safe with CSA Approval

Applications

Description

The pressure transmitter HDA 4700 in CSA version has been specially developed for the North American market for use in potentially explosive atmospheres and is based on the HDA 4000 series.

As with the industry model, the HDA 4700 in CSA version has a ceramic measurement cell with thick film strain gauge for measuring absolute pressure in the low pressure range.

Intended areas of application are, for example, in the oil and gas industry, on gas turbines or in locations with high levels of dust, e.g. in mills.

Special Features

- Accuracy ≤ ±0.5% BFSL
- Certificate: CSA 1760344
- Output signal 4 to 20 mA
- Very small temperature error
- Excellent EMC characteristics
- Excellent long-term properties

Approvals

Intrinsically Safe *(all connector versions)*:
Class I Division 1 Group A, B, C, D T6 [C, US]
Class I Zone 0 AEx ia IIC T6 [US]
Ex ia IIC T6 [C]

Intrinsically safe *(connectors: 9, A only)*:
Class I, II, III Division 1 Group A, B, C, D, E, F, T6 [C, US]

Non incendive *(all connector versions)*:
Class I Division 2 Group A, B, C, D, T4A [C, US]
Class I Zone 2 AEx nL IIC T4 [US]
Class I Zone 2 Ex nL IIC T4 [C]

Non incendive *(connectors: 9 only)*:
Class I, II, III Division 2 Group A, B C, D, F, T4A [C, US]
Class I Zone 2 AEx nA II T4 [US]
Class I Zone 2 Ex nA II T4 [C]

CE mark is a mandatory conformity mark on many products placed on the single market in the European Economic Area

CSA mark is for products sold both in the U.S.A. and Canada

Technical Details,

Sensor Specifications	
Measuring ranges - psi	150, 500, 750, 1000, 1500, 3000, 6000, 9000
Overload pressure - psi	290, 1160, 1160, 2900, 2900, 7250, 11600, 14500
Burst pressure - psi	1450, 2900, 2900, 7250, 7250, 14500, 29000, 29000
Mechanical connection	G1/4A DIN 3852 male *(bar ranges only)* SAE 6 9/16-18 UNF2A *(psi ranges only)* 1/4"-18 NPT *(psi ranges only)*
Tightening torque	SAE 6, G1/4: 15 lb-ft (20 Nm) 1/4" NPT: 30 lb-ft (40 Nm)
Parts in contact with media	Sensor: Stainless steel 1.4542 Mechanical connection: Stainless steel 1.4542, 1.4301, 1.4435, 1.4571, 1.4404, 316L, 304 Seal: FPM (SAE 6, G1/4)
Accuracy (B.F.S.L.) including linearity, hysteresis, and repeatability	≤ ±0.25% BFSL.
Temperature compensation zero point	≤ ±0.0045% / °F typ. ≤ ±0.0085% / °F typ.
Temperature compensation over range	≤ ±0.0045% / °F typ. ≤ ±0.0085% / °F typ.
Rise time	≤ 2 ms
Long-term drift	≤ ±0.1% FS typ. / year
Life expectancy	10 million load cycles (0 to 100% FS)
Weight	Approximately 180 g
Output signal	4 to 20 mA, 2 wire, $R_{L\,max}$ = (UB - 10V) / 20 mA [kΩ]
Environmental Condition	
Type of protection: intrinsically safe	
Compensated temperature range	-4° to 140°F (-20° to 60°C)
Operating temperature range	-4° to 140°F (-20° to 60°C)
Storage temperature range	-40° to 212°F (-40° to 100°C)
Media temperature range	-4° to 140°F (-20° to 60°C)
Type of protection: enclosures against dust non-incendive	
Compensated temperature range	-4° to 185°F (-20° to 85°C)
Operating temperature range	-4° to 185°F (-20° to 85°C)
Storage temperature range	-40° to 212°F (-40° to 100°C)
Media temperature range	-4° to 185°F (-20° to 85°C)
CSA mark	Certificate number: CSA 1760344
Vibration resistance to DIN EN 60068-2-6 at 10 to 500 Hz	≤ 20g
Environmental protection	min. IP 65 / NEMA 4
Electrical Specifications	
Supply voltage	12 to 28 VDC
Residual ripple suppy voltage	≤ 5%
Max supply current, 3-wire	approximately 100 mA
Max supply power	up to 28V: 1 W
Max capacitance of transmitter	≤ 12 nF
Max inductance of transmitter	0 H
Isolation voltage	125 VAC to housing *(standard)*
Reverse polarity protection of the supply voltage, excess voltage, override and short circuit protection	Standard

Model Code

HDA 4 7 - X - X - A - XXXX - C N X - XXX (PSI) XX in

Mechanical Connection
4 = G1/4A DIN 3852 male *(bar ranges only)*
7 = SAE 6 9/16-18 UNF2A *(psi ranges only)*
8 = 1/4"-18 NPT *(psi ranges only)*

Electrical Connection
9 = Conduit connection 1/2"-14 NPT male, 48" flying leads
A = DIN 43650/ISO 4400 plug, 3 pole + PE, 1/2" Conduit female
5 = DIN 43650/ISO 4400 plug, 3 pole + ground *(incudes ZBE 01)*
6 = M12x1 plug, 4 pole *(connector not included)*

Output Signal
A = 4-20mA, 2-wire

Pressure Range
for HDA 478x only *(1/4"-18 NPT)*
0150, 0500, 0750, 1000, 1500, 3000, 6000, 9000 psi

Approval
C = CSA *(for details see description of approvals)*

Isolation Voltage
N = 125 VAC to housing *(standard)*

Types of protection and application areas *(see chart below)*
A = Group 1
B = Group 2 and 3
C = Group 4

Modification Number
000 = Standard
(other number used e.g. for: version with long housing, snubber, pin wiring, connector on flying leads)

(psi)
psi version *(Leave blank for bar version)*

Cable Length
XX = 48" standard *(type 9 electrical connection only)*

Pin Connections

DIN 43650

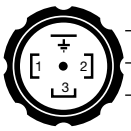

Pin	47X5-A	47XA-A
1	Signal +	Signal +
2	Signal -	Signal -
3	nc	nc
4	PE	PE

M12x1, 4 pole

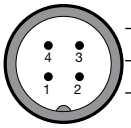

Pin	47x6-A
1	Signal +
2	nc
3	Signal -
4	nc

Dimensions

Conduit Connection Flying Leads

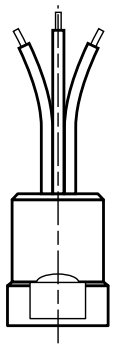

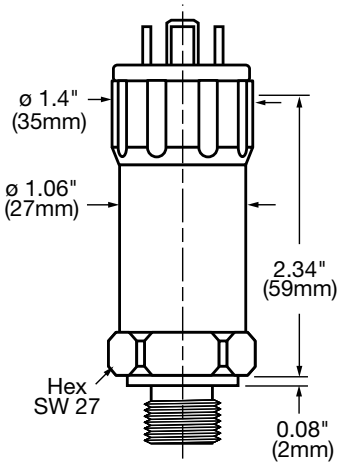

G 1/4

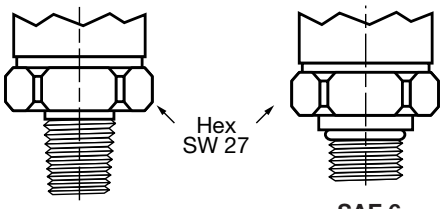

1/4" NPT **SAE 6**

Application Areas

Code Type Code	1	2	3	4
Protection class	Intrinsically safe Use in gases and dust	Intrinsically safe Use in gases	Non incendive with field wiring Use in gases	Non incendive Use in gases and dust
Certificate number	1760344			
Zones / Categories	Intrinsically safe Class I, II, III Division 1 Group A, B, C, D, E, F, G T6	Intrinsically safe Ex ia IIC T6 Class I Zone 0 AEx ia IIC T6 Class I Division 1 Group A, B, C, D T6	Non incendive Class I Division 2 Group A, B, C, D, T4A Class I Zone 2 AEx nL IIC T4 Class I Zone 2 Ex nL IIC T4	Non incendive Class I, II, III Division 2 Group A, B, C, D, F, G, T4A Class I Zone 2 Ex nA II T4 Class I Zone 2 AEx nA II T4
Electrical Connection *(see model code)*	9; A	4; 5; 6; 9; A		9
Model code - characteristic	A	B		C

HDA 4700 Series

High Pressure Transducer CSA Explosion Proof, ATEX & IECEx Explosion & Flame Proof

Applications

Description

The HDA 4700 series electronic pressure transmitter with triple approval *($_cCSA_{us}$, ATEX Exd, IECExd)* allows installtion world wide in any hazardous environment. This also optimizes spare part stock and prevents technicians to apply the wrong transmitters to their systems.

The transmitter is using our highly reliable and proven thin film pressure sensor which is welded to the connection so no internal seal is required. All welded parts as well as the housing is made out of industrial standard stainless steels toprevent corrosion. The triple approval is also available with NACE compliant materials.

The main areas of applications for this transmitter are oil and gas *(BOP's, top drives, turn tables, control panels)* and mining *(underground vehicles, hydraulic drives)* as well as other hazardous areas.

Special Features

- Accuracy ≤ ±0.25% BFSL
- Output signal 4 to 20 mA
- Very small temperature error
- Excellent EMC characteristics
- Excellent long-term properties

Approvals & Areas of Usage

$_cCSA_{US}$ Explosion Proof *(Seal Not Required)*
Class I Group A, B, C, D
Class II Group E, F, G
Class III
Type 4

ATEX Flame Proof
I M2 Ex d I
II 2G Ex d IIC T6, T5

IECEx Flame Proof
Ex d I Mb
Ex d IIC T6, T5 Gb

Technical Details,

Sensor Specifications	
Measuring ranges - psi	100, 300, 500, 1000, 1500, 3000, 5000, 6000, 9000, 10000, 15000
Overload pressure - psi	290, 1160, 1160, 2900, 2900, 7250, 11600, 11600, 14500, 14500, 23200
Burst pressure - psi	1450, 2900, 2900, 7250, 7250, 14500, 29000, 29000, 29000, 29000, 43500
Mechanical connection	1/4"-18 NPT, male 1/4"-18 NPT, female SAE 6 9/16-UNF 2A G1/4A DIN 3852 *(bar ranges only)* SF 250 CX20, Autoclave (7/16-20 UNF 2B)
Tightening torque	SAE 6, G1/4: 15 lb-ft (20 Nm) SF 250, 1/4 NPT: 30 lb-ft (40 Nm)
Materials in contact with media	1.4542, 1.4301, 304, 630
Housing materials	1.4404, 1.4435, 316L
Accuracy (B.F.S.L.) including linearity, hysteresis, and repeatability	≤ ±0.25% BFSL.
Temperature compensation zero point	≤ ±0.0045% / °F typ. ≤ ±0.0085% / °F max.
Temperature compensation over range	≤ ±0.0045% / °F typ. ≤ ±0.0085% / °F max.
Rise time	≤ 2 ms
Long-term drift	≤ ±0.1% FS typ. / year
Life expectancy	10 million load cycles (0 to 100% FS)
Weight	Approx. 300 g
Output signal	4 to 20 mA, 2 wire, $R_{Lmax} = (U_B - 8V) / 20$ mA [kΩ]
Environmental Condition	
Compensated temperature range	T5: -13° to 176°F (-25° to 80°C) T6: -13° to 140°F (-25° to 60°C)
Operating temperature range[1)]	T5: -40° to 176°F (-40° to 80°C) T6: -40° to 140°F (-40° to 60°C)
Storage temperature range	-40° to 212°F (-40° to 100°C)
Media temperature range[1)]	-40° to 212°F (-40° to 100°C) -4° to 212°F (-20° to 100°C) with FPM
CE mark	EN 61000-6-1 / 2 / 3 / 4, IEC 600079-0 / 1
Vibration resistance to DIN EN 60068-2-6 at 10 to 500 Hz	≤ 20g
Environmental Protection	IP 65 *(vented gauge)* / IP 69K *(sealed gauge)*
Electrical Specifications	
Supply voltage	8 to 30V
Residual ripple suppy voltage	≤ 5%
Reverse polarity protection of the supply voltage, excess voltage, override and short circuit protection	Standard

1) With SAE or G1/4, in combination with FPM seal -4°F (-20°C)

Model Code

HDA 4 7 X X - X - XXXXX - D - X - 000 (PSI) 72 inch

Mechanical Connection
- 4 = G1/4A DIN 3852 male *(bar ranges only)*
- 7 = SAE 6 9/16-18 UNF2A *(psi ranges only)*
- 8 = 1/4-18 NPT, male
- F = 1/4-18 NPT, female *(upon request)*
- C = SF 250 CX20, Autoclave (7/16-20 UNF 2B) *Others on request*

Electrical Connection
- 9 = Conduit connection *(1/2-14 NPT male)* with flying leads
- G = Conduit connection *(1/2-14 NPT male)* with open ended cable

Signal
- A = 4 to 20 mA *(2-conductor)*

Measuring Ranges
for HDA 478x and 47Fx only *(1/4-18 NPT male & female)*
0100, 0300, 0500, 1000, 1500, 3000, 5000, 6000, 9000

for HDA 47Cx only *(SF 250 CX20, Autoclave)*
10000, 15000 psi

Approval
- D = CSA Explosion Proof - seal not required
  ATEX / IECEx Flame Proof

Gauge Type
- S = Sealed gauge *(ranges 500 psi and higher)*
- V = Vented seal *(ranges lower than 500 psi)*

Modification Number
- 000 = Standard

(psi)
psi version *(Leave blank for bar version)*

Cable length
72 inch standard
Other lengths upon request

Circuit Diagram

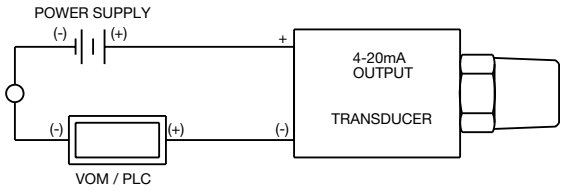

Application Areas

Protection class	$_C$CSA$_{US}$	Explosion Proof Seal Not Required	
	ATEX	Explosion and Flame Proof	
	IECEx	Explosion and Flame Proof	
Certificate number	ATEX KEMA 10ATEX0100 X CSA MC 224264 IECEx KEM 10.0053X		
Zones / Categories	$_C$CSA$_{US}$	Class I Class II Class III Type 4	Group A, B, C, D Group E, F, G
	ATEX	I M2 II 2G	Ex d I Ex d IIC T6, T5
	IECEx	Ex d I Mb Ex d IIC T6, T5 Gb	
Electrical Connection *(see model code)*	9; G		

Pin Connections

Conduit

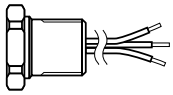

Wire	47x9-A
red	signal +
black	signal -
green/ yellow	PE/GND

DIN 43650

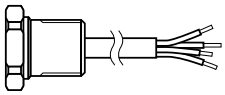

Wire	47xG-A
white	signal -
brown	signal +
green	n.c.
yellow	n.c.

See Label and instruction manual for detail on wirings.

Dimensions

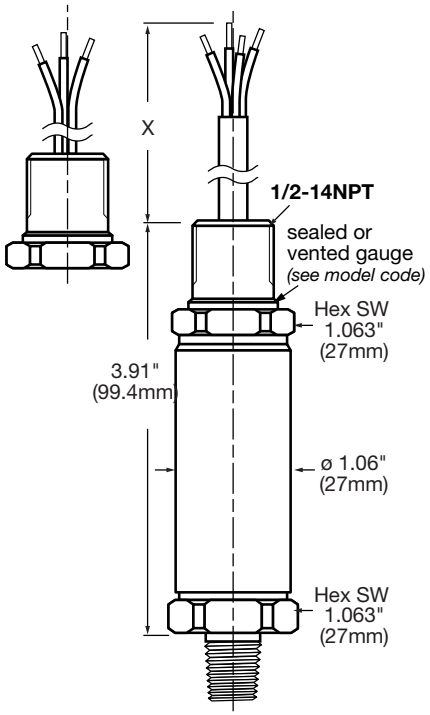

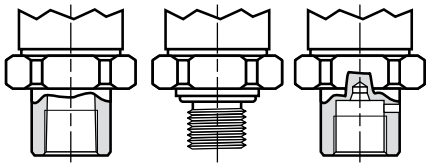

1/4-18NPT female | SAE 6 | AutoClave

EDS 4000 Series

Programmable Pressure Switch CSA explosion Proof, ATEX & IECEx Explosion & Flame Proof

Applications

Description

The EDS 4000 series electronic pressure switch with triple approval *(cCSAus, ATEX Exd, IECExd)* allows installtion world wide in any hazardous environment. This also optimizes spare part stock and prevents technicians to apply the wrong pressure switch to their systems.

The switch is using our highly reliable and proven thin film pressure sensor which is welded to the connection so no internal seal is required. All welded parts as well as the housing is made out of industrial standard stainless steels toprevent corrosion. The triple approval is also available with NACE compliant materials.

The main areas of applications for this pressure switch are oil and gas *(BOP's, top drives, turn tables, control panels)* and mining *(underground vehicles, hydraulic drives)* as well as other hazardous areas.

Special Features

- Accuracy ≤ ±0.5 % BFSL
- Option of PNP or NPN switching outputs
- High switching output capacity
- Very small temperature error
- Excellent EMC characteristics
- Excellent long-term properties

Approvals

cCSAus Explosion Proof *(Seal Not Required)*
Class I Group A, B, C, D
Class II Group E, F, G
Class III
Type 4

ATEX Flame Proof
I M2 Ex d I
II 2G Ex d IIC T6, T5

IECEx Flame Proof
Ex d I Mb
Ex d IIC T6, T5 Gb

Technical Details,

Sensor Specifications	
Measuring ranges - psi	100, 300, 500, 1000, 1500, 3000, 5000, 6000, 9000, 10000, 15000
Overload pressure - psi	290, 1160, 1160, 2900, 2900, 7250, 11600, 11600, 14500, 14500, 23200
Burst pressure - psi	1450, 2900, 2900, 7250, 7250, 14500, 29000, 29000, 29000, 29000, 43500
Mechanical connection	1/4"-18 NPT, male 1/4"-18 NPT, female SAE 6 9/16-UNF 2A G1/4A DIN 3852 *(bar ranges only)* SF 250 CX20, Autoclave (7/16-20 UNF 2B)
Tightening torque	SAE 6, G1/4: 15 lb-ft (20 Nm) SF 250, 1/4" NPT: 30 lb-ft (40 Nm)
Material in contact with media	1.4542, 1.4301, 304, 630
Housing material	1.4404, 1.4435, 316L
Accuracy (B.F.S.L.) including linearity, hysteresis, and repeatability	≤ ±0.5% BFSL.
Temperature compensation zero point	≤ ±0.0085% / °F typ. ≤ ±0.017% / °F max.
Temperature compensation over range	≤ ±0.0085% / °F typ. ≤ ±0.017% / °F max.
Long-term drift	≤ ±0.3% FS typ. / year
Life expectancy	10 million load cycles (0 to 100% FS)
Weight	Approximately 280 g
Switching Specifications	
Type	1 or 2 PNP outputs *(NPN upon request)*
Repeatability	≤ ±0.1% FS max.
Switching current	1 Switching ouput 1.2A 2 Switching outputs 1.0A each
Set / reset point / NO /NC	Programmed using HPG 3000 Programming Unit
Set point in psi[2)]	5 to 100% of measuring range
Hysteresis in psi	1 to 96% of measuring range
Switch on/off delay	8 to 2000 ms programmed using HPG 3000
Switching cycles	≥ 100 million
Environmental Condition	
Compensated temperature range	T5: -13° to 176°F (-25° to 80°C) T6: -13° to 140°F (-25° to 60°C)
Operating temperature range[1)]	T5: -40° to 176°F (-25° to 80°C) T6: -40° to 140°F (-40° to 60°C)
Storage temperature range	-40° to 212°F (-40° to 100°C)
Media temperature range[1)]	-40° to 212°F (-40° to 100°C) -4° to 212°F (-20° to 100°C) with FPM
CE mark	EN 61000-6-1 / 2 / 3 / 4, IEC 600079-0 / 1
Vibration resistance to DIN EN 60068-2-6 at 10 to 500 Hz	≤ 20g
Environmental Protection	IP 65 *(vented gauge)* / IP 69K *(sealed gauge)*
Electrical Specifications	
Supply voltage	12 to 30 VDC
Residual ripple suppy voltage	≤ 5%
Current consumption	approximately 25 mA *(inactive switching output)*
Reverse polarity protection of the supply voltage, excess voltage, override and short circuit protection	Standard

1) With SAE or G1/4, in combination with FPM seal -4°F (-20°C)
2) Max set point for 10,000 psi = 9980 psi

Model Code

EDS 4 4 X X - XXXX - X P - D X - 000 (PSI) 72 inch

Mechanical Connection
- 4 = G1/4A DIN 3852 male *(bar ranges only)*
- 7 = SAE 6 9/16-18 UNF2A
- 8 = 1/4-18 NPT, male
- F = 1/4-18 NPT, female *(upon request)*
- C = SF 250 CX20, Autoclave (7/16-20 UNF 2B) *Others on request*

Electrical Connection
- 9 = Conduit connection *(1/2-14 NPT male)* with flying leads
- G = Conduit connection *(1/2-14 NPT male)* with open ended cable

Measuring Ranges
0100, 0300, 0500, 1000, 1500, 3000, 6000, 9000

for EDS 44Cx only *(SF 250 CX20, Autoclave)*
10,000*, 15,000 psi

Output
- 1 = 1 Switching Output
- 2 = 2 Switching Outputs

Output Technology
- P = Programmable switching output

Approval
- D = CSA Explosion Proof - seal not required
  ATEX / IECEx Flame Proof

Gauge Type
- S = Sealed gauge *(ranges 500 psi and higher)*
- V = Vented seal *(ranges lower than 500 psi)*

Modification Number
- 000 = Standard

(psi)
psi version *(Leave blank for bar version)*

Cable length
72 inch = standard
Other lengths upon request

*9980 is the max setpoint

HPG 3000 Programming Unit
Manual available online
Part #00909422

The HPG 3000 is NOT allowed to be used in hazardous environments.

UVM 3000 Adapter Cable
Part# 00909752

HPG 3000 Power Supply with Connector
Part #02091103

Application Areas

Protection class	$_{c}$CSA$_{US}$	Explosion Proof Seal Not Required	
	ATEX	Explosion and Flame Proof	
	IECEx	Explosion and Flame Proof	
Certificate number	ATEX KEMA 10ATEX0100 X CSA MC 224264 IECEx KEM 10.0053X		
Zones / Categories	$_{c}$CSA$_{US}$	Class I Class II Class III Type 4	Group A, B, C, D Group E, F, G
	ATEX	I M2 II 2G	Ex d I Ex d IIC T6, T5
	IECEx	Ex d I Mb Ex d IIC T6, T5 Gb	
Electrical Connection *(see model code)*	9; G		

Pin Connections

Conduit Single Leads

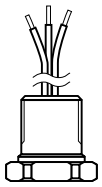

Wire	44x9-X-1	44x9-X-2
red	signal +	signal +
white	switch ouput 1	switch ouput 1
black	0 V	0 V
green	program	program*
brown		switch ouput 2

Conduit Jacketed Cable

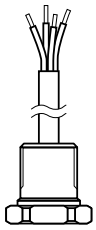

Wire	44xG-X-1	44xG-X-2
white	SP 1	SP 1
brown	n.c.	SP 2
green	program	program*
yellow	n.c.	n.c.
grey	+ supply	+ supply
pink	0 V	0 V

See Label and instruction manual for detail on wirings.
*The programming wire has to be connected to the ground after programming.

Dimensions

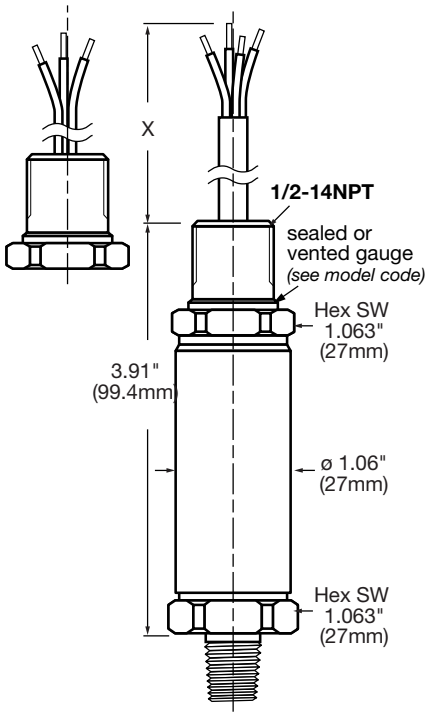

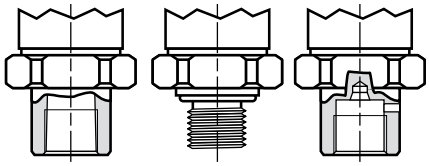

1/4-18NPT female | SAE 6 | AutoClave

ETS 4500 Series

Temperature Transducer CSA Explosion Proof, ATEX & IECEx Explosion & Flame Proof

Applications

Description

The temperature transmitter ETS 4500 series with its pressure proof hpusing and threefold approval for ATEX, CSA, and IECEx, make it universally suitable for worldwide usage in potentially explosive atmoshere applications.

All temperature transmitters are supplied and labeled with triple certification. The requirement to stock teperature transmitters for separate approvals is no longer necessary.

Based on a silicon semiconductor temperature sensor element and evaluation electronics, the temperature sensor can measure in th erange of -4° to 212°F (-20° to 100°C).

The main areas of applications for this transmitter are oil and gas *(BOP's, top drives, turn tables, control panels)* and mining *(underground vehicles, hydraulic drives)* as well as other hazardous areas.

Special Features

- Accuracy ≤ ±0.25% BFSL
- Output signal 4 to 20 mA
- Very small temperature error
- Excellent EMC characteristics
- Excellent long-term properties

Approvals

$_{C}$CSA$_{US}$ Explosion Proof *(Seal Not Required)*
Class I Group A, B, C, D
Class II Group E, F, G
Class III
Type 4

ATEX Flame Proof
I M2 Ex d I
II 2G Ex d IIC T6, T5

IECEx Flame Proof
Ex d I Mb
Ex d IIC T6, T5 Gb

Technical Details,

Sensor Specifications	
Sensing technology	Silicon semiconductor device
Measuring range	-13° to 212°F (-25° to 100°C)
Sensor length - inch (mm)	0.42 (10.7), 3.94 (100), 9.84 (250), 13.8 (350)
Pressure rating psi (bar) / inch (mm)	SAE 6: 8700 (600) / 0.42 (10.7) 1/4" NPT: 1800 (125) / 3.94 (100) 1/4" NPT: 1800 (125) / 9.84 (250) 1/4" NPT: 1800 (125) / 13.8 (350)
Mechanical Connection	1/4"-18 NPT, male SAE 6 9/16-UNF 2A
Tightening Torque	SAE 6, G1/4: 15 lb-ft (20 Nm) 1/4" NPT: 30 lb-ft (40 Nm)
Parts in Contact with media	1.4571, 1.4301 (316Ti, 304) Seal: FPM (SAE 6)
Housing material	1.4404, 1.4435 (316L)
Weight	280 g / 0.42 (10.7 mm) 315 g/ 3.94 (100 mm) 350 g / 9.84 (250 mm) 385 g / 13.8 (350 mm)
Output Data	
Output Signal[1)] permitted resistance	4 to 20 mA, 2 wire, $R_{Lmax} = (U_B - 8V) / 20$ mA [kΩ]
Accuracy	≤ ±3.0% FS max. ≤ ±1.5% FS typ.
Rise time to DIN EN 60751	T_{50}: 10s / T_{90}: 15s
Environmental Condition	
Operating temperature range[1)]	T5: -40° to 176°F (-40° to 80°C) T6: -40° to 140°F (-40° to 60°C)
Storage temperature range	-40° to 212°F (-40° to 100°C)
Media temperature range[1)]	T5: -40° to 176°F (-40° to 80°C) T6: -40° to 140°F (-40° to 60°C)
CE mark	EN 61000-6-1 / 2 / 3 / 4, EN 60079-0 / 1
Vibration resistance to DIN EN 60068-2-6 at 10 to 500 Hz	≤ 20g
Environmental Protection to DIN 40050	IP 69K
Electrical Specifications	
Supply voltage	8 to 30V
Residual ripple suppy voltage	≤ 5%
Reverse polarity protection of the supply voltage, excess voltage, override and short circuit protection	Standard

1) With SAE or G1/4, in combination with FPM seal -4°F (-20°C)

Model Code

ETS 4 5 X X - A - D - XXX - 000 72 inch

Mechanical Connection
7 = SAE 6, 9/16-18 UNF 2A male
(probe length "010" only)
8 = 1/4-18 NPT, male
(probe lengths "100-350" only)

Electrical Connection
9 = Conduit connection *(1/2-14 NPT male)* with flying leads
G = Conduit connection *(1/2-14 NPT male)* with open ended cable

Signal
A = 4 to 20 mA *(2-conductor)*

Approval
D = CSA Explosion Proof - seal not required
ATEX / IECEx Flame Proof

Gauge Type
010 = 0.42" (10.7 mm) *(SAE 6 only)*
100 = 3.94" (100 mm) *(1/4 NPT only)*
250 = 9.84" (250 mm) *(1/4 NPT only)*
350 = 13.8" (350 mm) *(1/4 NPT only)*

Modification Number
000 = Standard

Cable length
72 inch = standard
Other lengths upon request

Pin Connections

Conduit

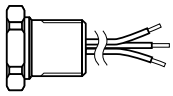

Wire	45x9-A
red	signal +
black	signal -
green/ yellow	PE/GND

DIN 43650

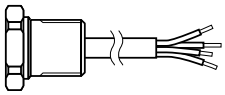

Wire	45xG-A
white	signal -
brown	signal +
green	n.c.
yellow	n.c.

See Label and instruction manual for detail on wirings.

Circuit Diagram

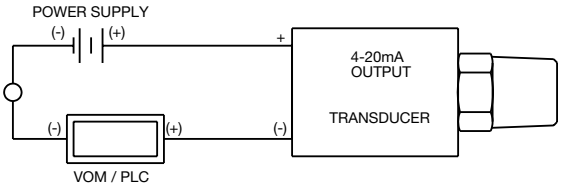

Dimensions

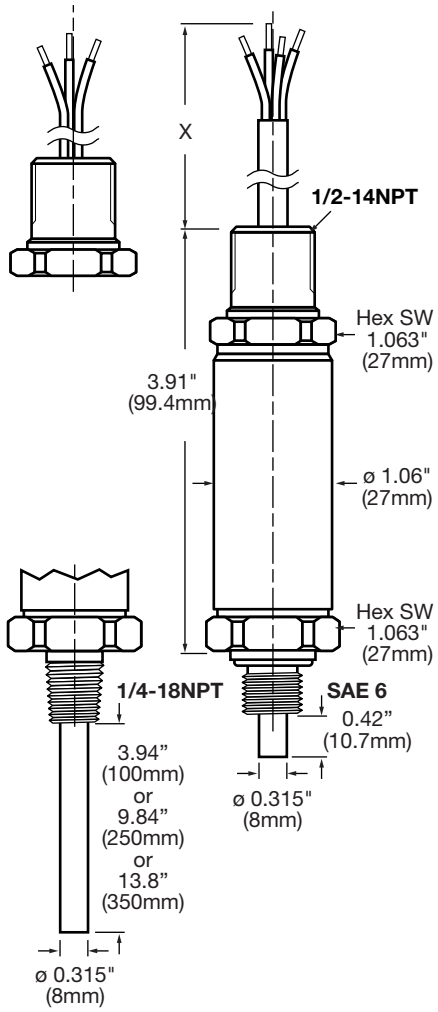

Application Areas

Protection class	$_{C}CSA_{US}$	Explosion Proof Seal Not Required	
	ATEX	Flame Proof	
	IECEx	Flame Proof	
Certificate number	ATEX KEMA 10ATEX0100 X CSA MC 224264 IECEx KEM 10.0053X		
Zones / Categories	$_{C}CSA_{US}$	Class I Class II Class III Type 4	Group A, B, C, D Group E, F, G
	ATEX	I M2 II 2G	Ex d I Ex d IIC T6, T5
	IECEx	Ex d I Mb Ex d IIC T6, T5 Gb	
Electrical Connection *(see model code)*	9; G		

HYDAC Lab
Fluid Condition Sensor

Applications

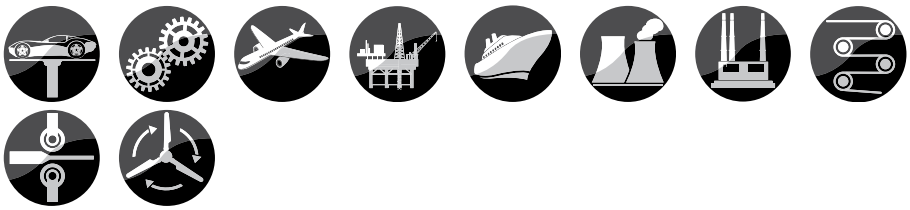

Description

HYDACLab sensors are compact, multi-functional sensors for determining the condition of fluids in real-time. Operators are kept informed of changes in fluid condition as they occur and can immediately change the operating conditions accordingly. Changes in fluid condition that might occur due to aging or mixing with other fluids, for example, are indicated by measuring fluid temperature, relative moisture content and relative changes in fluid viscosity and fluid dielectric constant. Those measurements are available as analog signals or switching signals at the electrical output of the HYDACLab for activating warning devices or alarms.

Please contact Product Management to discuss your particular application for this product.

Technical Details

Sensor Specifications	
Relative moisture content	0 to 100% of saturated concentration
Temperature measure range	-13° to 212°F
Dielectric constant (E_R)	1 to 10
Operating pressure - psi	< 725
Rated pressure - psi	8700
Fluid flow velocity	< 5m/s
Mechanical connection	G 3/4 DIN 3852 E
Tightening torque	22 lb-ft (30 Nm)
Parts in contact with media	Stainless Steel, FPM seal
Output Data - Humidity Measurement	
Output signal	4 to 20 mA at 0 to 100%
Calibration accuracy	≤ ±2% FS max
Accuracy	≤ ±3% FS typ*
Output Data - Temperature Measurements	
Output signal	4 to 20 mA for -13° to 212°F (-25° to 100°C)
Accuracy	≤ ±3% FS max
Output Data - Relative Changes in Dielectric Constant	
Output signal	12 mA ± 8 mA *(corresponds to ± 30% Initial Value)*
Accuracy	see below**
Switching Specifications	
Type	Signal 1 *(Normally Closed)* / PNP-transistor switching output / Switching level: ≥ (UB - 4 V)
Switching current	0.5 mA max.
Preset warning level SP1	Relative humidity ≥ 85% Temperature ≥ 80°C (176°F) Changes in relative dielectric constant ±15% *(temp. comp.)*
Environmental Condition	
Operating temperature range	-4° to 176°F
Storage temperature range	-40° to 194°F
Media Compatibility	HLP mineral oils *(compatibility w/ HLP-D mineral oils is optionally available)* HEES and HETG esters
CE mark	EN 61000-6-1 / 2 / 3 / 4
Environmental Protection	IP 67
Electrical Specifications	
Supply voltage, 2-wire	10 to 36 VDC
Residual ripple suppy voltage	≤ 5%
Electrical Connection	5 pole, M12x1, male
Reverse polarity protection of the supply voltage, excess voltage, override and short circuit protection	Standard
Weight	Approximately 205 g

*The max. accuracy achievable when measuring relative humidity is heavily dependent on the type of fluid additive. More precise information on this is avaiable on request

**The accuracy achievable when measuring the relative change in dielectric constant is dependent on the application, the type of oil and the individual calibration of the sensor. More detailed information is available on request.

Approvals

CE mark is a mandatory conformity mark on many products placed on the single market in the European Economic Area

*Contact factory for other ranges

**The accuracy of measurements of changes in relative dielectric constant vary according to the applications and the types of fluids involved, and the sensor's own calibration. More detailed information on this is available on request.

Model Code

HLB 1 X 0 8 - 1 C - 000 F1

Variables
3 = Temperature
= Relative Humidity
= Relatvie change in dielectric constant *(DC)*

Mechanical Connection
0 = G 3/4 A to DIN 3852

Electrical Connection
8 = M12x1 plug, 5 pole *(connector not included)*

Output Type, Signal 1
1 = NC switching signal

Output Type, Signal 2
C = 4 to 20 mA analog signal

Modification Number
000 = Standard

Seal Material
F1 = FPM Seal *(hydraulic oil)*

Please contact Product Management to discuss your particular application for this product.

Pin Connections

M12x1, 5 pole

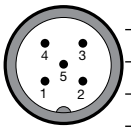

Pin	1308
1	$+U_B$
2	Signal 1
3	Ground
4	Signal 2
5	unused

ZBM 21

Mounting Block for HYDAC LAB

Part #03244260

Dimensions

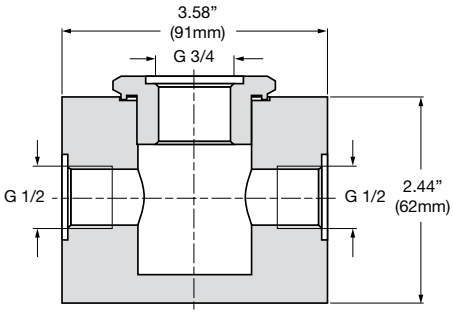

Dimensions

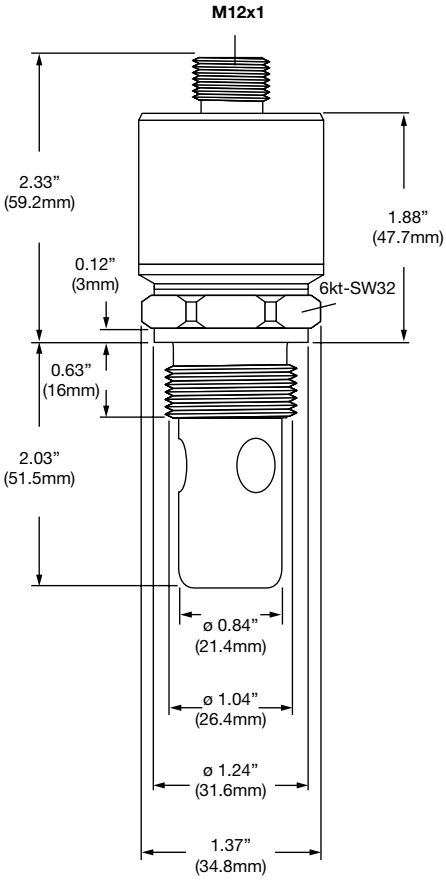

AS 1000 Series
AquaSensor

Applications

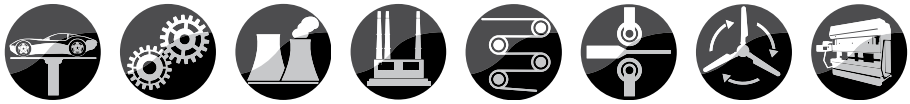

Description

The AS 1000 series AquaSensor is a stationary, microprocessor based measurement unit for the continuous monitoring of the water saturation level and temperature in hydraulic and lubrication systems. The sensor measures the water content relative to the saturation concentration *(saturation point)* and output the degree of saturation *(saturation level)* in the range of 0 to 100% as a 4 - 20 mA signal. A reading of 0% would indicate fluid that is free of water, while a reading of 100% would indicate a fluid that is saturated with water.

Water in Oil

It is almost certain that there is water present in hydraulic and lubrication systems. These systems should be operated without the presence of free or emulsified water. The most common sources of water entering a system are ambient humidity, “splash” from process water, and new oil. Water contamination will accelerate the aging process of the oil resulting in oil oxidization, additive depletion, reduced lubrication, corrosion and damaged components. Most of these costly problems can be avoided by monitoring the water content of the operating fluids.

Sometimes the water content is difficult to determine, but with the HYDAC AquaSensor, determining the amount of water is easy! The most practical method for monitoring water content in oil is as a percent of the saturation level. Different oils are capable of dissolving varying amounts of water, therefore they have varying water saturation curves. The curve *(below)* is an example of the typical relationship of water saturation level versus fluid temperature in hydraulic and lubrication oils. By looking at the example graph it can be seen that this fluid is capable of holding more water, or has a higher saturation level, as the temperature increases.

Example of a Hydraulic Oil Saturation Curve

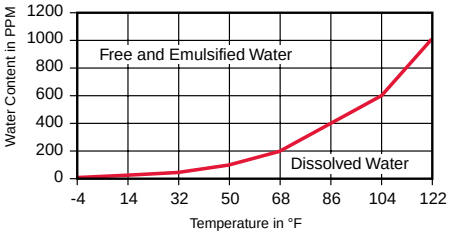

Technical Details

Input Data	
Measuring range *(temperature)*	-13° to 212°F (-25° to 100°C)
Measuring range *(saturation level)*	0 to 100%
Operating pressure	-7 to 725 psi
Burst pressure	≤ 9000 psi
Parts in contact with fluid	Stainless steel, FPM or EPDM seal, ceramic with evaporated metal
Output Data - Humidity Measurement	
Output signal *(saturation level)*	4 to 20 mA, 2 wire, $R_{Lmax} = (U_B - 10V) / 20\ mA\ [k\Omega]$
Calibrated accuracy	≤ ±2% FS max.
Accuracy in media measurements	≤ ±3% FS typ.
Pressure dependent	±0.2% FS / bar
Output Data - Temperature Measurement	
Output signal *(temperature)*	4 to 20 mA, 2 wire, $R_{Lmax} = (U_B - 10V) / 20\ mA\ [k\Omega]$
Accuracy	≤ ±2% FS max.
Compensated temperature range	32° to 194°F (0° to 90°C)
Operating temperature range	-40° to 212°F (-40° to 100°C)
Storage temperature range	-40° to 212°F (-40° to 100°C)
Media temperature range	-40° to 257°F (-40° to 125°C)
Viscosity range	32 to 23175 SUS (1 to 5000 cSt)
Flow velocity	< 16 ft/sec
Permissible fluids	Fluids based on mineral oil and synthetic and natural esters
CE mark	EN 61000-6-1 / 2 / 3 / 4
Type of protection acc. DIN 40050	IP67
Other Data	
Supply voltage	12 to 32 V DC
Residual ripple	≤ 5%
Thread connection	G 3/8 BSPP male thread
Torque rating	18 ft-lbs (25 Nm)
Electrical connection Pin 1: +Ub Pin 2: Signal saturation level Pin 3: 0V / GND Pin 4: Signal temperature Pin 5: HSI *(HYDAC Self Identification)*	M12x1.5 pole (DIN VDE 0627)
Reverse polarity protection of the supply voltage and short circuit protection	Standard
Weight	approx. 145 g

note: FS (Full Scale) = relative to the full measuring range

Model Code

AS 1 X 0 8 - C - 000

Series
AS = AquaSensor

Measuring Range
1 = Saturation level 0 to 100%;
Temperature -13° to 212°F (-25° to 100°C)

Fluids
0 = Mineral oils
1 = Phosphate esters (HFD-R)

Mechanical Connection
0 = G 3/8A DIN 3852

Electrical Connection
8 = Plug M12x1, 5-pole *(connector not included)*

Signal Technology
C = Saturation level 4 to 20 mA (0 to 100%),
Temperature 4 to 20 mA (-25° to 100°C)

Modification Number
000 = Standard

Items supplied
- AquaSensor
- Operation Manual

Circuit Connection

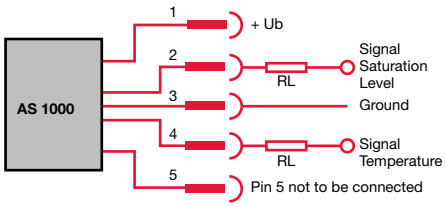

Color Codes for connectors with cables:
1 = brown
2 = white
3 = blue
4 = black
5 = gray

Accessories

ZBE 08 Connector
5 Pole M12x1 90°

ZBE 08 connector only (IP65)
Part #06006786

ZBE 08-02 with 6' cable (IP67)
Part #06006792

ZBE 08-05 with 15' cable (IP67)
Part #06006791

HDA 5500-0-0-AC-000 Display
Part #00908861

HDA 5500-0-0-DC-000 Display
Part #00908862

HDA 5500-1-0-DC-000 Display
Part #00908868

HDA 5500-1-1-AC-000 Display
Part #00908869

HDA 5500-1-1-DC-000 Display
Part #00908870

Dimensions

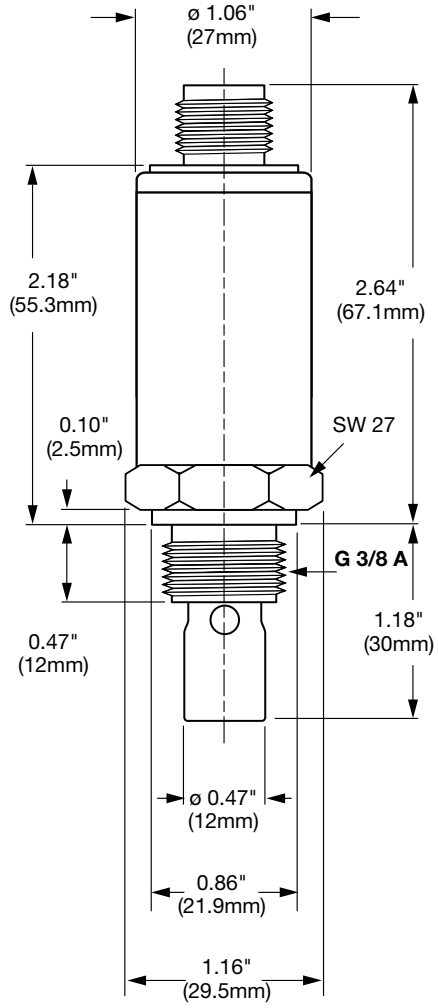

AS 1000 G1/4 Housing Block Adapter

Part #03182134
Purchase separately

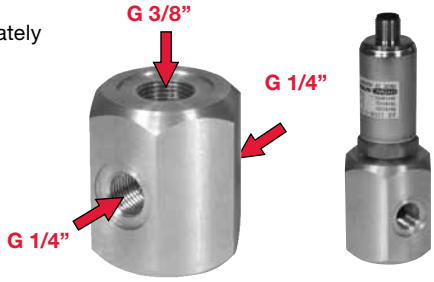

CS 1000 Series
Contamination Sensor

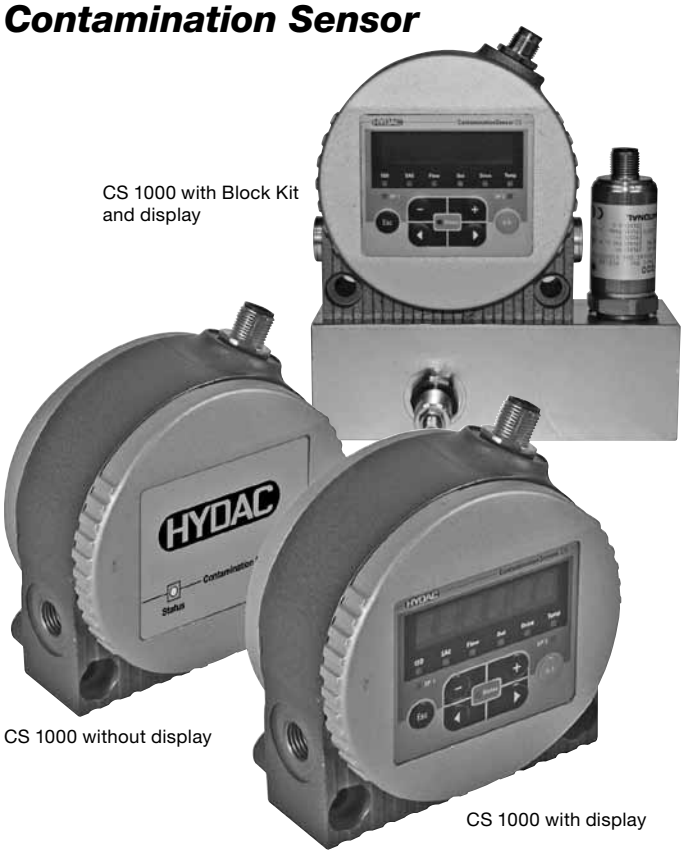

CS 1000 with Block Kit and display

CS 1000 without display

CS 1000 with display

Description

The CS 1000 Contamination Sensor is the latest HYDAC development for continuous measurement of solid contamination of fluids.

Using the latest technology and materials, the CS 1000 is a reliable measuring instrument that is permanently mounted on your mobile or industrial equipment.

The attractive cost-to-performance ratio makes it especially interesting for OEM applications. Online, real-time condition monitoring allows you to have total predictive maintenance.

Applications

Monitoring system on vehicles such as

- Construction equipment
- Agricultural machinery
- Mobile and stationary mining equipment

Industrial hydraulic systems

- Integration into power unit monitoring systems
- Hydraulic test stands

Combination with filter unit

CS 1000 Block KIT

The Contamination Sensor Block KIT *(CS 1000 Block KIT)* combines two condition monitoring products, the CS 1000 series *(Contamination Sensor)* and the AS 1000 series *(Aqua Sensor)* into one plug and play unit. It serves as an on-line measurement of both solid contamination and water in hydraulic and lube systems.

Note: Flow control is necessary when utilizing the CS 1000 sensor. Flow must be maintained through the sensor module to ensure accurate readings. Utilization of the CS Block Kit is required to maintain Sensor flow rate range as described in the Technical Details *(at the right)*.

Features

- Versions with or without display
- Display with pivot-function
- Display with 6-digit ISO Code *(optional)*
- Measurement of solid particle contamination in hydraulic and lubricating fluids
- Compact and rugged design
- Type of protection IP67
- Max. pressure 4350 psi
- Max. viscosity 4635 SUS (1000 cSt)
- Voltage supply 9 - 36VDC
- Data output 4 - 20mA or 0 - 10 VDC

Technical Details

Self-diagnosis	Continuously with error indication via status LED
Measuring range	Display up to class ISO 7/6/5 to 28/27/26 Calibration within the range ISO 13/11/10 to 23/21/18
Contamination code	ISO 4406 : 1999 SAE AS 4059 (D)
Operation pressure	4350 psi max
Connectors Inlet Outlet	 Thread G 1/4, ISO 228 Thread G 1/4, ISO 228
Sensor flow rate	1 - 10 oz/m
Permissible viscosity range	15 - 4635 SUS (1 - 1000 cSt)
Fluid temperature range	32° to 185°F (0° to 85°C)
Power supply voltage	9 - 36 VDC, residual ripple < 10%
Power consumption	3 Watt maximum
Electrical specification 4 to 20 mA output: 0 to 10 V output:	 Max. 330 Ω Min. 820 Ω Max. current 1.5 A
Electrical outputs Analog Interfaces Limit Switching Output RS485	 4 to 20 mA (max 330 Ω) 0 to 10 VDC (min 820 Ω) Passive, n-switching power MOSFET, max current 1.5A 2 conductor cable
Operating temperature range	-22° to 176°F (-30° to 80°C)
Relative Humidity	max. 95%, non-condensing
Seal Material Hydraulic/Mineral Oil Phosphate Ester	 Fluoro-elastomer (FPM) Ethylene Propylene (EPDM)
Electrical safety class	III *(low voltage protection)*
IP class	IP67
Weight	2.9 lbs. (1.3 kg)

We do not guarantee the accuracy or completeness of this information. The information is based on average working condition. For exceptional operating conditions please contact our technical department. All details are subject to technical changes.

Model Code

CS 1 2 2 0 - A - 0 - 0 - 0 - 0 / - 000

Series
CS = Contamination Sensor

Resolution
1 = 4 Particle Size Channels

Indicator Code
2 = ISO 4406 : 1999; SAE AS 4059 (D)
>4 µm(c) >6 µm(c) >14 µm(c) >21 µm(c)
3 = ISO 4406 : 1987; NAS 1638
>2 µm >5 µm >15 µm >25 µm
ISO 4406 : 1999; SAE AS 4059 (D)
>4 µm(c) >6 µm(c) >14 µm(c) >21 µm(c)

Options
1 = without Display
2 = with Display *(270° rotation of display)*

Fluids
0 = Hydraulic/Mineral oil
1 = Phosphate Esters

Analog Interfaces
A = 4 to 20 mA
B = 0 to 10 V

Switching Output
0 = Limit Switching Output

Digital Interfaces
0 = RS485

Electrical Connection
0 = Plug M12x1, 8-pole *(connection cable not included)*

Mounting
0 = Inline version *(vertical flow mounting is recommended)*
1 = Flanged version

Modification Number
000 = standard
K = CS Block Kit without AS Sensor *(requires Mounting Option 1)*
KAS = CS Block Kit with AS Sensor *(requires Mounting Option 1)*

Scope Of Delivery
- Contamination sensor
- Operation and Instruction manual
- Calibration Certificate

Accessories
- Connection cable 6 ft. with M12x1 connector, screened 8-pole: Part Number 03281220
- Connection cable 16 ft. with M12x1 connector, screened 8-pole: Part Number 03281239
- Connection cable 9 ft. with M12x1 connector, 8-pole: Part Number 02091414
- CSI-D-5 Contamination Sensor Interface: Part Number 03249563

Model Codes Containing RED are non-standard items – Minimum quantities and longer lead times may apply - Contact HYDAC for information and availablity

CS 1000 Block Kit

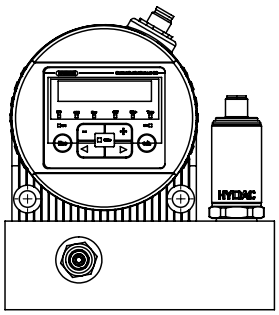

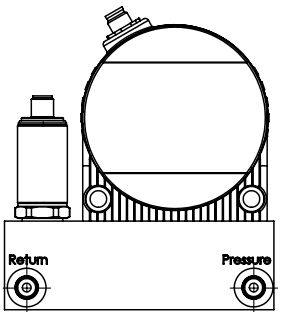

Quick Order Guide

Model Code	Part Number	Description
CS1220-A-0-0-0-0 /-000	03236362	4-20mA display model
CS1210-A-0-0-0-0 /-000	03240458	4-20mA non-display model
Connection Cable	03281220	6 foot
CS1220-A-0-0-0-1 / K	02087348	4-20mA display model and CS Block Kit without AS Sensor
CS1220-A-0-0-0-1 / KAS	02086855	4-20mA display model and CS Block Kit with AS Sensor

Dimensions
CS 1000 with Block Kit

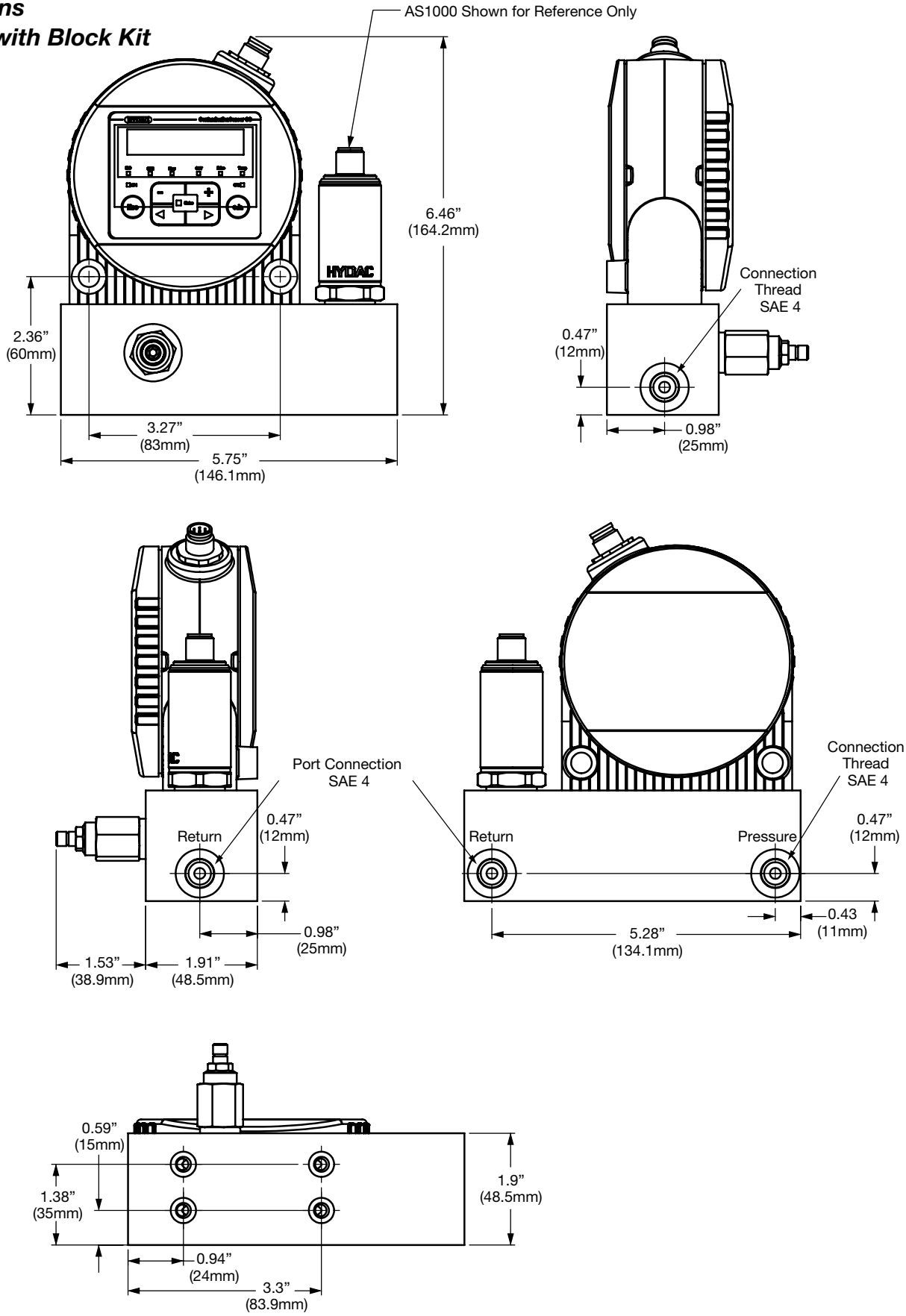

Dimensions are for general information only. All critical dimensions should be verified by requesting a certified print.

Hydraulic Connections
Inline Version

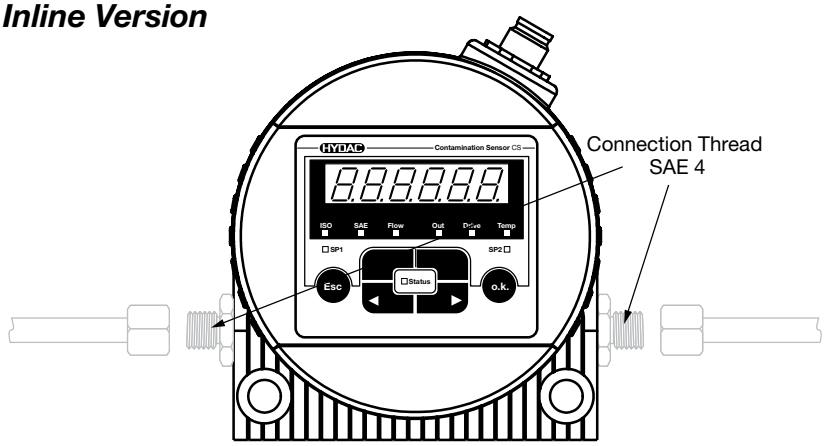

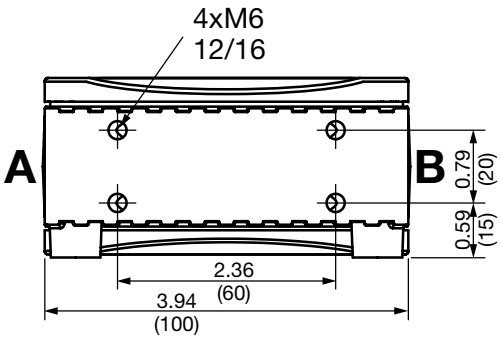

Flanged Version

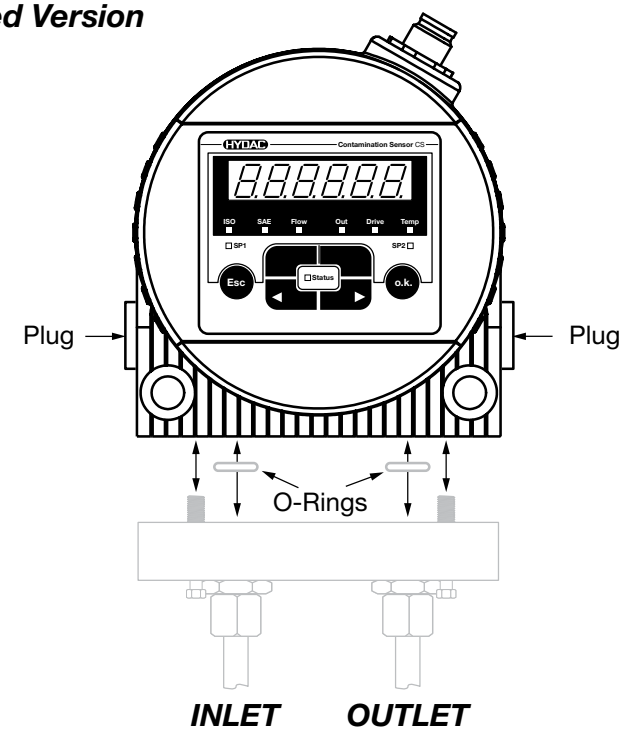

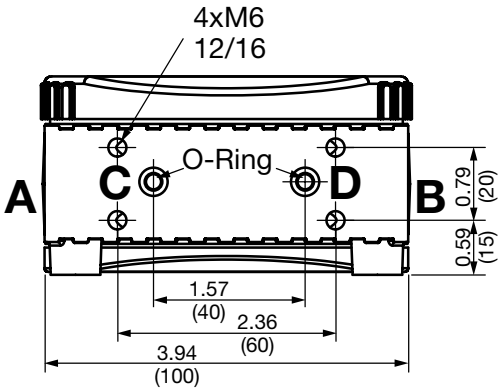

Pressure - Viscosity Range

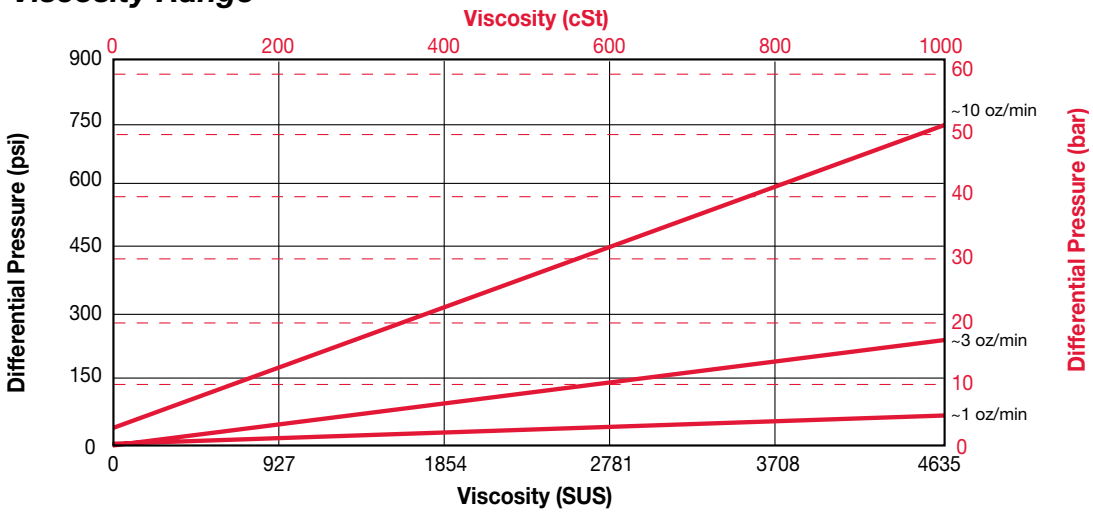

CMU 1000 Series
Condition Monitoring Unit

Applications

Description

The CMU 1000 is an electronic evaluation unit for permanent online condition monitoring of machines and systems.

In order to achieve this, the device must be supplied with relevant data which is recorded by the sensors connected to it.

This recorded data *(processed or unprocessed)* can be transferred by the CMU 1000 via different ports or as an analog value to other devices and/or monitoring levels.

The CMU 1000 processes the application program stored in it continuously and cyclically like a PLC. The user creates this program simply and conveniently using the CM Editor developed for this purpose and then uploads it to the CMU 1000.

The CM Editor is part of the HYDAC PC software CMWIN Version V03 or higher and it provides the various tools and functions in accordance with IEC 61131 for designing, integrating and testing the user program using “drag and drop” operations.

For status indication and for displaying messages and values on the device itself, there is a back-lit LCD and three different colored LEDs.

The CMU 1000 is operated and data are input on site using a built-in keypad within the menu structure of the device.

It is possible to connect easily to higher level control systems, monitoring systems and bus systems using the built-in interfaces or in combination with an additional coupling module.

Technical Details

Supply	
Input voltage	18.0 to 35.0 V DC
Current consumption max.	1.5 A *(3.5 A when CSI-F-10 connected)*
Reverse polarity protection:	-30 V
Withstand voltage	+40 V
Connection of sensors	Up to 8 sensors with HSI functionality or up to 8 SMART sensors* and in addition up to 8 analog sensors and up to 4 digital sensors 4 x digital / 2 x digital + 2 x frequency / 3 x digital + 1 x frequency
Analog inputs	
Channel I and J (Accuracy)	4 to 20 mA ≤ ±0.1% FS max. 0 to 20 mA ≤ ±0.1% FS max. 0.5 to 4.5 V ≤ ±0.1% FS max. 0 to 10 V ≤ ±0.1% FS max.
Channel K and L (Accuracy)	4 to 20 mA ≤ ±0.1% FS max. 0 to 20 mA ≤ ±0.1% FS max. 0.5 to 4.5 V ≤ ±0.1% FS max. 0 to 50 V ≤ ±0.1% FS max. -10 to +10 V ≤ ±0.2% FS max. L only!
Channel M and N (Accuracy)	4 to 20 mA ≤ ±0.1% FS max. 0 to 20 mA ≤ ±0.1% FS max. 0.5 to 4.5 V ≤ ±0.1% FS max.
Channel O and P (Accuracy)	4 to 20 mA ≤ ±0.1% FS max. 0 to 20 mA ≤ ± 0.1%FS max. 0.5 to 4.5 V ≤ ±0.1% FS max. -10 to +10 V ≤ ±0.2 %FS max. P only!
Digital Inputs	
Quantity	4, of which 2 are for frequency measurement *(Channel Q and R)*
Trigger threshold	approx. 2 V
Dynamics	30 kHz
Measurement channels Quantity	32 - A measurement channel can be a value of a connected sensor *(also a subchannel of a SMART sensor)* or a value derived *(calculated)* from sensor data.
Analog Outputs	
Quantity	2
Type	individually selectable, current *(4 to 20 mA)* or voltage *(0 to 10 V)*
Digital Outputs	
Quantity	4
Type	Relay output, change-over contact
Switching capacity	30V DC / 1 A
Calculation Unit	
Analog value recording	12 Bit A/D-converter
Interfaces	
Keypad	- 4 arrow keys *(up, down, right, left)* - OK key - ESC key
Display *(back-lit)*	- Two-line LCD *(2 x 16 characters)* - Additional indication of status information via 3 different colored LEDs is possible
USB Mass Storage Device **	- USB 1.1 / USB 2.0 full speed Port for connecting a mass storage device *(memory stick)* - Female connection type “A”.
Ethernet, supported protocols	- RJ 45 8/8 Ethernet interface - HTTP Server - OPC Client
Serial Interface 0 *(UART 0)*	- Implementing an RS 232 or an HSI master interface - Change-over user-programmable *(optional IO-Link also possible)* - Connection via plug-in terminals - No handshake lines
HSI Master	Cascading the CMU
USB Device	- USB 1.1 / USB 2.0 full speed Port for connecting a PC / Notebook to configure the CMU - Female connection type “B”.

Approvals

CE mark is a mandatory conformity mark on many products placed on the single market in the European Economic Area

CAN Bus Interface	Can be integrated as an option
IO Link Interface	Can be integrated as an option
Cycle Time	Independently determined at start of program. Display of actual cycle time is possible in the CM Editor
Operating and Ambient Conditions	
Operating temperature	-4° to 158°F (-20 to 70°C)
Storage temperature	-22° to 176°F (-30 to 80°C)
Relative humidity	0 to 70%, non-condensing
Dimensions	approx. 8.35” x 4.17” x 1.42” (212 x 106 x 36 mm)
Weight	approx. 600 g
Technical Standards	
EMC	EN 61000-6-1 / 2 / 3 / 4
Safety	EN 61010
Protection class	IP 40

*SMART sensors *(Condition Monitoring Sensors)* are a generation of sensors from HYDAC, which can provide a variety of different measured values.
**Recorded data from the CMU can be transferred to a memory stick via this interface. The USB Host supports mass storage devices exclusively.

Block Circuit Diagram

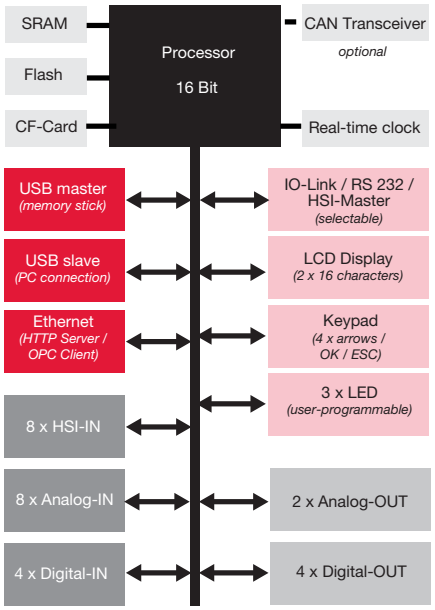

Special Features

- 8 input channels for HSI or SMART sensors
- 8 input channels for analog sensors
- 4 input channels for digital signals
- 2 output channels for analog signals
- 4 relay switching outputs with change-over contacts
- USB slave port for PC connection
- USB master port for storing measured data on a standard memory stick
- Ethernet interface
- RS 232 port
- 2-line LCD *(2 x 16 characters)* to display measured data and status and/or error messages
- 3 user-programmable, different colored LEDs for status indication *(red, yellow, green)*
- Simple operation using navigation pad
- Creation of customized application program using PC software CMWIN supplied

Model Code

CMU 1000 – 000 – X

Modification number
000 = Standard

Operating Manual and Documentation
D = German
E = English
F = French

Note: On units with a different modification number, please read the label or the technical amendment details supplied with the unit.

Accessories:
Appropriate accessories, such as sensor lines for the electrical connection, can be found in the Accessories section.

Dimensions

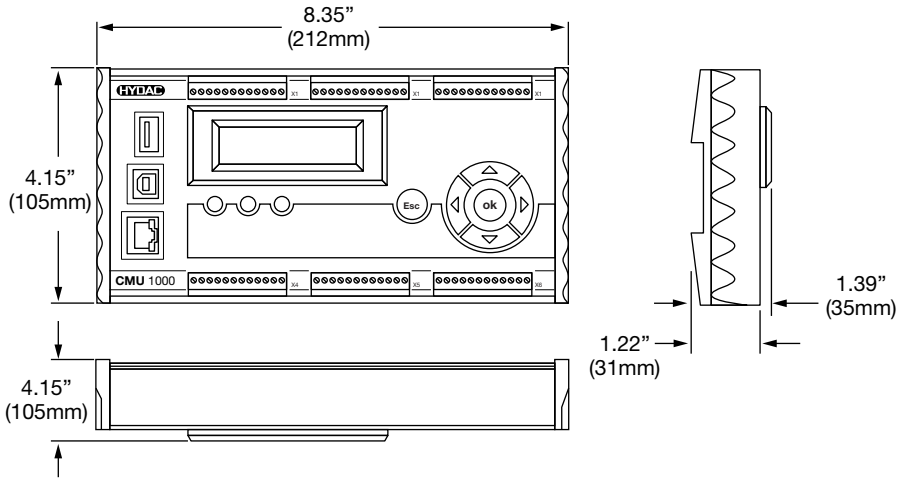

CSI-F-10 Series
GSM Radio Module

Applications

Description

The GSM radio module CSI-F-10 is an all-purpose electronic unit for transferring data and digital signals via the GSM mobile radio network. As part of the HYDAC Condition Monitoring concept, among other functions, the CSI-F-10 links the sensor level with the interpretation level.

The unit is designed both for stand alone operation and for use as a GSM modem on a CMU 1000 *(HYDAC Condition Monitoring Unit)*.

Up to two HYDAC SMART sensors such as HYDACLab®, AS 1000 or CS 1000 can be connected to its input sockets. In addition it is also possible to monitor various different system conditions via the four integrated digital inputs and to relay the data in binary form with the aid of the two integrated digital outputs. Through these digital outputs the device can also access the monitored machine / system directly.

The CSI-F-10 processes and monitors the input signals using the application program stored in it. Which data are to be monitored, and how, and at what point a particular message is sent, is defined in detail in this program.

This application program can be created easily and conveniently *(in accordance with IEC 61131)* using the CM Editor, which forms part of the HYDAC PC software CMWIN Version V03 or higher.

Depending on the application, the user can choose independently between two operating modes of the CSI-F-10 and hence define the type and content of the communication.

Special Features

- Status indication for:
  - Network strength (4 LEDs)
  - Signals (2 LEDs, programmable)
  - Device status (1 LED)
  - GSM status (1 LED)
- Can be connected to CMU 1000
- Simplest form of programming using "Drag & Drop" on user interface
- Up to 5 telephone numbers can be stored *(for access via GSM)*

Technical Details

Supply	
Input voltage	10.5 to 35.0 V DC
Residual ripple	≤ 5%
Current consumption without sensors and outputs	Typically ≤ 90 mA in stand-by mode ≤ 200 mA for radio connection Pulsed: ≤ 2 A *(recomm. power supply 3.5 A)*
Reverse polarity protect.	-35 V
Sensor Inputs	
Quantity	for 2 SMART sensors
Output voltage	$+U_B$ – 0.5 V
Current supply	500 mA max. at 50°C
Logic Measurement Channels Quantity	32 - A measurement channel can be a sub-channel of a SMART sensor* or a value derived *(calculated)* from sensor data.
Digital Inputs	
Quantity	4
Input voltage	0 to 35 V DC
Trigger threshold	Low: < 0.8 V; High: > 5.0 V
Current consumption	approx. 4 mA
Output voltage	$+U_B$ – 0.5 V
Current supply *(incl. outputs)*	500 mA max. at 50°C
Digital Outputs	
Quantity	2
Switching capacity *(per output)*	$+U_B$ Out x 0.2 A
Interfaces	
HSI bus	
Mobile radio network	GSM 850/950 (2 W EGSM) GSM 1800/1900 (1 W EGSM)
Antenna	50Ω FME plug
SIM	3V SIM card
Operating Conditions	
Operating temperature	-4 to 130°F (-20° to 55°C) (GSM 850/900) -14 to 130°F (-25° to 55°C) (GSM 1800/1900)
Storage temperature	-22 to 150°F
Relative humidity	0 to 70 %, non-condensing
Dimensions and Weight	
Dimensions	approx. 5.6" x 3.8" x 2.2" without antenna
Weight approx.	350 g
Technical Standards	
EMC	Conforms to R&TTE Directive 1999/5/EC
CE mark	EN 61000 - 6 - 1 / 2 / 3 / 4
Safety	EN 60950 / EN 61010
Protection class	IP 65

*SMART sensors *(Condition Monitoring Sensors)* are a generation of sensors from HYDAC, which can provide a variety of different measured values.

- Parameters can be set online
- Sensors connected via M12x1 male connector
- Very compact design

Approvals

CE mark is a mandatory conformity mark on many products placed on the single market in the European Economic Area

Model Code

CSI - F - 10 - 0 - 000 - X

Modification Number
000 = Standard

Operating Manual and Documentation
D = German
E = English
F = French

Note: On units with a different modification number, please read the label or the technical amendment details supplied with the unit.

Accessories: Appropriate accessories, such as sensor lines for the electrical connection, can be found in the Accessories section.

Block Circuit Diagram

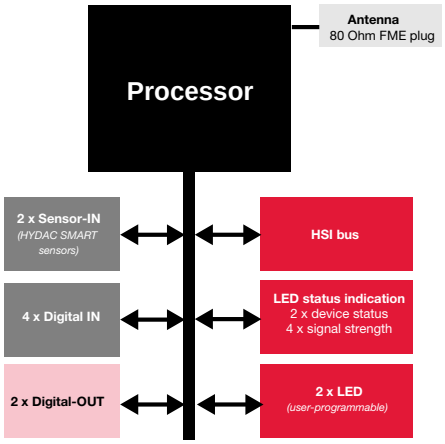

CM Editor

The CM Editor is part of the HYDAC PC software CMWIN Version 03 or higher and provides a wide variety of tools and functions for designing, integrating and testing the application program.

An application program consists of many individual functions which can be linked together. During subsequent operation, this user program is processed as for a PLC, cyclically.

The program is created according to the IEC 61131 *(the standard for PLC programming)*.

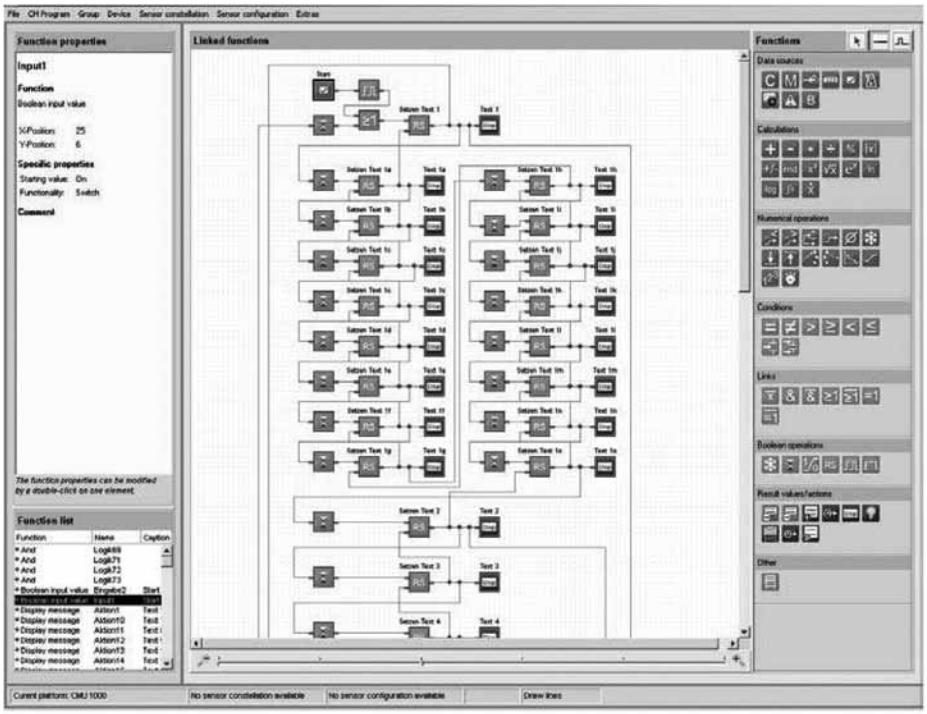

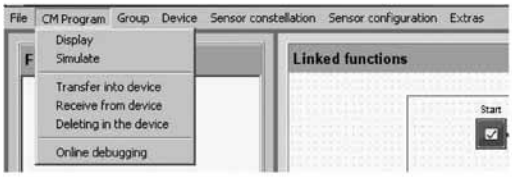

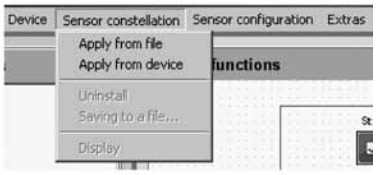

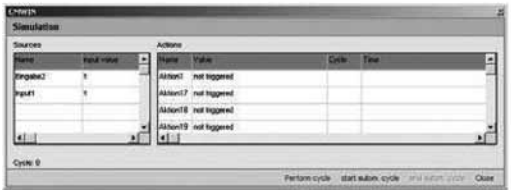

Dimensions

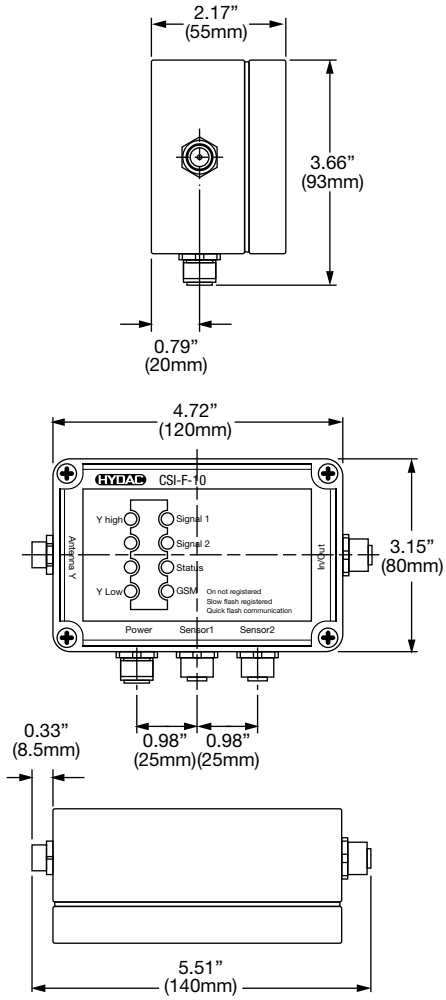

CSI-B-2 Series
Condition Monitoring Interface Module

Applications

Description

The Condition Monitoring Interface Module CSI-B-2 is another element in the HYDAC Condition Monitoring concept which connects the sensor level with the interpretation level.

It is an all-purpose electronic unit for converting the HSI signal from HYDAC SMART sensors into a standardized PC signal.

Using the HYDAC "CMWIN" PC software, it is possible to read the data and measured values of the connected SMART sensors directly.

The long-term memory can also be read, as well as making adjustments and setting parameters directly on the connected sensor *(the setting options depend on the particular sensor)*.

The HSI signal can be converted either into an RS 232 or an RS 485 signal. The CSI-B-2 can be connected to any PC via the RS 232 interface *(and possibly an additional standard RS 232-USB adapter*)*.

The RS 485 interface and appropriate additional coupling modules can also be used to connect to higher-level control and/ or bus systems.

Special Features

- 1 input channel for HYDAC SMART sensors
- Direct connection of the sensor via screw-type terminals
- Indication of the active interface via LED (RS 232 / RS 485)
- Very compact design
- Suitable for mounting on standard DIN rails
- Protection class IP 40

*RS 232-USB adapter is not supplied with the unit.

Approvals

CE mark is a mandatory conformity mark on many products placed on the single market in the European Economic Area

Technical Details

Input data	
HSI interface	HYDAC Sensor Interface for linking sensors digitally - male connection X2
Output data	
Signal output	Switchable: RS485 half duplex or RS232 - male connection X1 - SUB-D 9 pole connection (RS232)
Operating conditions	
Operating temperature range	-13° to 185°F (-25° to 85°C)
Storage temperature range	-22° to 185°F (-30° to 85°C)
Relative humidity	0 to 70%, non-condensing
CE mark	EN 61000-6-1, EN 61000-6-2 EN 61000-6-3, EN 61000-6-4
Protection class to DIN 40050	IP 40
Other data	
Supply voltage	18 to 35 V DC *(male connection X1)*
Current capacity *(module + sensor)*	30 mA to 400 mA max. *(depending on the supply voltage and the sensor connection)*
Sensor power supply	15 V DC ±5% / 300 mA max. at 75°F (23°C) *(male connection X2)*
Electrical connection X1: module supply + RS232 / RS485 X2: sensor supply + HSI SUB-D: RS232	Max. cross section of connection 1.5mm2 Male terminal block, 8 pole RM 3.5 Male terminal block, 5 pole RM 3.5 9 pole connection with securing screws
Reverse polarity protection of the supply voltage, excess voltage, override and short circuit protection	Standard
Option of conversion mode	Option of HSI - RS232 or HSI - RS485 via jumper (bridge): X1.3 - X1.4 open: HSI - RS232 X1.3 - X1.4 closed: HSI - RS485
Indication of active conversion mode	Green LED: HSI - RS232 Yellow LED: HSI - RS485
Housing	Dimensions: 2.2 x 4.1 x 1.2 in (55 x 105 x 31mm) Housing to be mounted on rails (35mm) to DIN EN 60715 TH 35 *(formerly DIN EN 50022)*
Weight	approx. 140 g

Model Code

CSI - B - 2 - 000

Modification Number
000 = Standard

Note: On units with a different modification number, please read the label or the technical amendment details supplied with the unit.

Accessories: Appropriate accessories, such as sensor lines for the electrical connection can be found in the Accessories section.

Terminal Assignment

Terminal strip -X1

Pin	Signal	
1	RS 485 (-)	
2	RS 485 (+)	
3	3 – 4 open:	HSI to RS 232
4	3 – 4 closed:	HSI to RS 485
5	RxD RS 232 *(connected to Pin 3 SUB-D 9 pole)*	
6	TxD RS 232 *(connected to Pin 2 SUB-D 9 pole)*	
7	0 V *(connected to Pin 5 SUB-D 9 pole)*	
8	$+U_B$ *(18 to 35 V DC)* Module supply	

Terminal strip -X2

Pin	Signal
1	$+U_B$ (15 V DC) Sensor supply
2	0 V
3	HSI signal
4	0 V
5	0 V

Dimensions

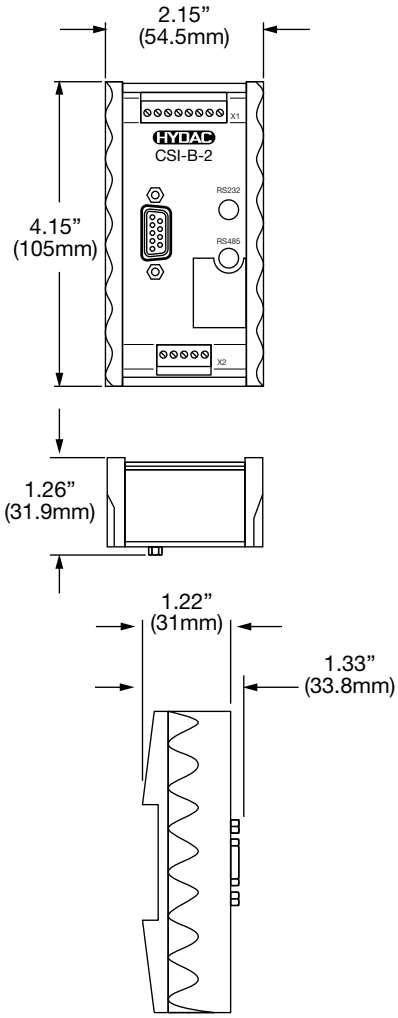

Min of 500 pieces required per year

HDA 8000 Series
Pressure Transducer

Applications

Description

The pressure transmitter series HDA 8400 has been specifically developed for the OEM market, e.g. in mobile applications. Like most of our pressure transmitter series, the HDA 8000 is based on a robust, long-life thin-film sensor.

All parts *(sensor and pressure connection)* which are in contact with the fluid are made of stainless steel and are welded together. This means there are no possible sites of leakage inside the sensor. Leakage is eliminated.

The pressure transmitters are available in various pressure ranges from 0 to 500 psi to 0 to 9000 psi. For integration into modern controls, standard output signals are available, e. g. 4 to 20 mA, 0 to 5 V, 1 to 6 V or 0 to 10 V. Ratiometric output signals are also available.

For the electrical connection, various built-in connections are available. A basic accuracy of max. ≤ ±1% FS, combined with a small temperature drift, ensures a broad range of applications for the HDA 8400.

Special Features

- Accuracy ≤ ±0.5% BFSL
- Outstanding performance in terms of temperature effect and EMC
- Very compact design
- ECE type approval *(approved for road vehicles)*

Approvals

CE mark is a mandatory conformity mark on many products placed on the single market in the European Economic Area

Technical Details

Sensor Specifications	
Measuring ranges - psi	500, 750, 1000, 1500, 3000, 5000, 6000, 9000
Overload pressure - psi	1160, 1160, 2900, 2900, 7250, 11600, 11600, 14500
Burst pressure - psi	2900, 2900, 7250, 7250, 14500, 14500, 29000, 29000
Mechanical connection	G1/4A DIN 3852 male *(bar ranges only)* SAE 6 9/16-18 UNF 2A *(psi ranges only)* SAE 4 7/16-20 UNF 2A *(psi ranges only)*
Tightening torque	G1/4: 15 lb-ft (20 Nm) SAE: 15 lb-ft (20 Nm) SAE 4: 11 lb-ft (15 Nm)
Parts in contact with media	Stainless Steel; FPM seal
Accuracy (B.F.S.L.) including linearity, hysteresis, and repeatability	≤ ±0.5% BFSL
Temperature compensation zero point	≤ ±0.008% FS / °F typ. ≤ ±0.014% FS / °F max.
Temperature compensation over range	≤ ±0.008% FS / °F typ. ≤ ±0.014% FS / °F max.
Rise time	≤ 2 ms
Long-term drift	≤ ± 0.3% FS typ. / year
Life expectancy	10 million load cycles (0 to 100% FS)
Weight	Approximately 55 g
Output Signal	4 to 20 mA, 2 wire, 0-5V, 1-6V, 0-10V 0.5-4.5V ratiometric 0.5-4.5V @ 5V supply (10-90%)
Environmental Condition	
Compensated temperature range	-13° to 185°F (-25° to 85°C)
Operating temperature range	-40° to 212°F (-40° to 100°C)
Storage temperature range	-40° to 212°F (-40° to 100°C)
Media temperature range	-40° to 257°F (-40° to 125°C)
CE mark	EN 61000-6-1 / 2 / 3 / 4
Vibration resistance to DIN EN 60068-2-6 at 5 to 2000 Hz	≤ 25g
Environmental protection	IP 67 or IP 69K *(depending on electrical connector)*
Electrical Specifications	
Supply voltage, 2-wire	8 to 30 VDC
Supply voltage, 3-wire	12 to 30 VDC 5 VDC ± 5% *(ratio metric)*
Residual ripple suppy voltage	≤ 5%
Max Supply current, 3-wire	approximately 25 mA
Electrical connection	M12x1, 4-pole AMP DIN 72585 Baj., 3-pole Deutsch DT04-3P, 3-pole Deutsch DT04-4P, 4-pole AMP Superseal, 3-pole Packard Metri Pack Series 150, 3-pole AMP Junior Power Times, 3-pole 1 m open ended cable
Reverse polarity protection of the supply voltage, excess voltage, override and short circuit protection	Standard

Model Code

HDA 8 4 X X - X - XXXX - 000

Mechanical Connection

4	=	G 1/4 A DIN 3852 *(bar ranges only)*
6	=	SAE 4, 7/16-20 UNF2A male *(psi ranges only)*
7	=	SAE 6, 9/16-18 UNF2A male *(psi ranges only)*

Electrical Connection

1	=	1 m open ended cable
6	=	M12x1 plug, 4 pole
F	=	AMP DIN 72585 code 1, 3 pole
H	=	Packard metri pack series 150, 3 pole
K	=	Deutsch DT04-3P, 3 pole
L	=	AMP superseal, 3 pole
M	=	AMP junior power times, 3 pole
V	=	Deutsch DT04-4P, 4 pole

Output Signal

A	=	2 conductor, 4-20 mA
B	=	3 conductor, 0-10V
G	=	3 conductor, *(please specify output voltage)*
R	=	3 conductor, 0.5 to 4.5V @ 5V Supply *(up to 90% of supply voltage)*

Pressure Range

0500, 750, 1000, 3000, 5000, 6000, 9000 psi
bar ranges upon request

Modification Number

000	=	Standard

*** Specifications must be submitted by customer.**

Plug Connection

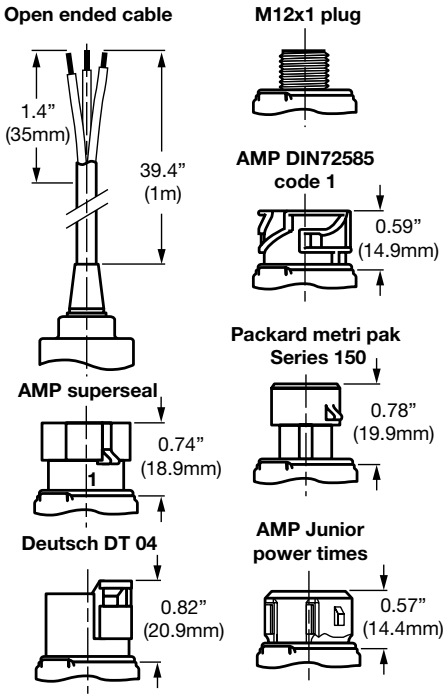

Dimensions

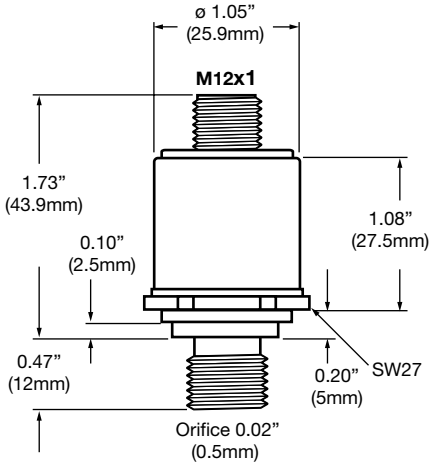

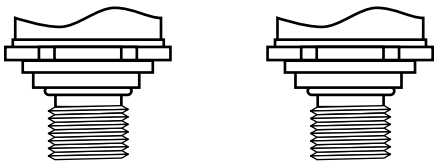

7/16-20UNF2A 9/16-18UNF2A

Min of 25 pieces required

EDS 410 Series
Factory Set Pressure Switch

Applications

Description

The electronic pressure switch EDS 410 has been specially developed for use in volume production machines, and is based on the EDS 4000 pressure switch series.

The EDS 410 is available with 1 or 2 transistor switching outputs (PNP), which can be defined as either N/C or N/O.

The switching and switch-back points of the EDS 410 are factory-set according to customer specification.

As with the EDS 4000 standard model, the EDS 410 has a ceramic measurement cell with thick-film strain gauge for measuring relative pressure in the low pressure range, and a stainless steel measurement cell with thin-film strain gauge for measuring in the high pressure range.

Various pressure ranges between 0 to 15 psi and 0 to 9000 psi as well as different electrical and mechanical connection types are available.

Special Features

- 1 or 2 transistor switching outputs (PNP), either as N/C or N/O
- Factory-set according to customer specification
- Accuracy ≤ ±.05% BFSL
- Highly robust sensor cell
- Very small temperature error
- Excellent EMC characteristics
- Excellent long-term characteristics

Approvals

CE mark is a mandatory conformity mark on many products placed on the single market in the European Economic Area

Technical Details

Sensor Specifications	
Measuring ranges -psi	-14.5 to 75, 15, 30, 50, 100, 150, 250, 500, 1000, 1500, 3000, 5000, 6000, 9000
Overload pressure -psi	290, 45, 100, 150, 290, 450, 725, 11600, 2900, 2900, 7250, 11600, 11600, 14500
Burst pressure -psi	400, 70, 150, 250, 400, 650, 1000, 2900, 7250, 7250, 14500, 29000, 29000, 29000
Mechanical connection	G1/4A DIN 3852 male *(bar ranges only)* 1/4”-18 NPT male *(psi ranges only)* SAE 6 9/16-18 UNF 2A *(psi ranges only)*
Tightening torque	SAE 6, G1/4: 15 lb-ft (20 Nm) 1/4” NPT: 30 ft-lb (40 Nm)
Parts in contact with media	Stainless steel, ceramic, FPM or EPDM
Accuracy (B.F.S.L.) including linearity, hysteresis, and repeatability	≤ ±0.5% BFSL.
Temperature compensation zero point	≤ ±0.0085% / °F typ. ≤ ±0.017% / °F max.
Temperature compensation over range	≤ ±0.0085% / °F typ. ≤ ±0.017% / °F max.
Long-term drift	≤ ±0.3% FS typ. / year
Life expectancy	10 million load cycles (0 to 100% FS)
Weight	Approximately 150 g
Switching Specifications	
Type	1 or 2 PNP transistor output (N/O or N/C)
Output load	1.2 A per output
Repeatability	≤ ±0.1% FS max at 77°F (25°C)
Set point	to be specified by customer
Reset point	to be specified by customer
Switching cycles	≥ 100 million
Switch delay time	32 ms *(standard)* 8 to 2000ms to be specified by customer *(in 8ms steps)*
Environmental Condition	
Compensated temperature range	-13° to 185°F (-25° to 85°C)
Operating temperature range	-40° to 185°F (-40° to 85°C)
Storage temperature range	-40° to 212°F (-40° to 100°C)
Media temperature range	-40° to 212°F (-40° to 100°C)
CE mark	EN 61000-6-1/2/3/4
Vibration resistance to DIN EN 60068-2-6 at 10 to 500 Hz	≤ 20g
Environmental Protection	IP 65, IP 67 (depending on electrical connection)
Electrical Specifications	
Supply voltage	8 to 32 VDC fuse protection I ≤ 5 A *(provided by customer)*
Residual ripple suppy voltage	≤ 5%
Max supply current, 3-wire	25 mA *(plus switching current)*
Electrical connection	Connector DIN 43650 M12x1, 4-pole others upon request
Reverse polarity protection of the supply voltage, excess voltage, override and short circuit protection	Standard

Dimensions

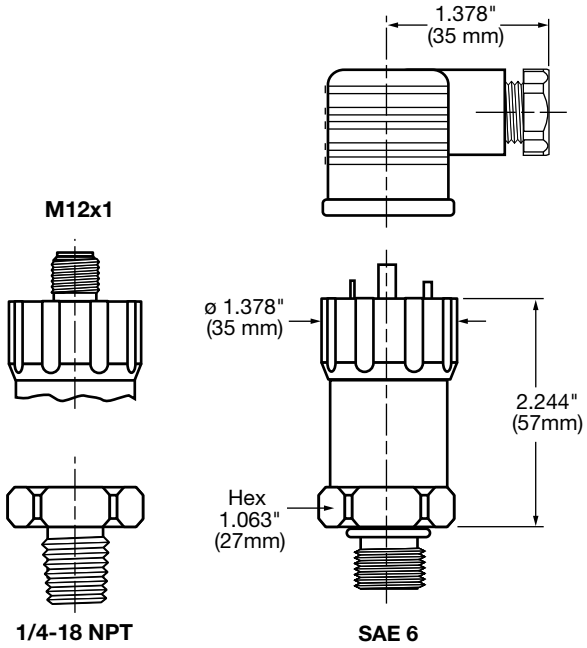
1.378"
(35 mm)
M12x1
ø 1.378"
(35 mm)
2.244"
(57mm)
Hex
1.063"
(27mm)
1/4-18 NPT
SAE 6

Min of 100 pieces required per year

EDS 710 Series
Factory Set Pressure Switch

Applications

Description

The electronic pressure switch EDS 710 has been specially developed for use in large volume production machines.

The highly compact unit has a very robust pressure sensor with thin-film strain gauge on a stainless steel membrane.

The EDS 710 is available with 1 or 2 transistor switching outputs (PNP), which can be defined as either N/C or N/O.

The switching and switch-back points of the EDS 710 can be permanently factory-set according to customer specification.

Various pressure ranges between 0 to 230 psi and 0 to 9000 psi are available.

Special Features

- 1 or 2 transistor switching outputs (PNP), either as N/C or N/O
- Factory-set according to customer specification
- Accuracy ≤ ±0.5% BFSL
- Highly robust sensor cell
- Highly compact design
- Very small temperature error

Approvals

CE mark is a mandatory conformity mark on many products placed on the single market in the European Economic Area

Technical Details,

Sensor Specifications	
Measuring ranges - psi	500, 750, 1000, 1500, 3000, 6000, 9000
Overload pressure - psi	1160, 2900, 2900, 7250, 11600, 14500
Burst pressure - psi	2900, 2900, 7250, 7250, 14500, 29000, 29000
Mechanical connection	G1/4A DIN 3852 male *(bar ranges only)* SAE 6 9/16-18 male *(psi ranges only)*
Tightening torque	15 lb-ft (20 Nm)
Parts in contact with media	Stainless steel
Accuracy (B.F.S.L.) including linearity, hysteresis, and repeatability	≤ ±0.5% BFSL
Temperature compensation zero point	≤ ±0.0085% / °F typ. ≤ ±0.017% / °F max.
Temperature compensation over range	≤ ±0.0085% / °F typ. ≤ ±0.017% / °F max.
Long-term drift	≤ ±0.3% FS typ. / year
Life expectancy	10 million load cycles (0 to 100% FS)
Weight	Approximately 60 g
Switching Specifications	
Type	1 or 2 PNP outputs (N/C or N/O)
Repeatability	≤ ±0.5% FS max.
Switching current	400 mA per output
Switch point	to be specified by customer
Switch-back point	to be specified by customer
Switching cycles	≥ 100 million
Switch delay time	approx. 32 ms *(standard)* 8 to 2000ms to be specified by customer *(in 8ms steps)*
Environmental Condition	
Compensated temperature range	-13° to 185°F (-25° to 85°C)
Operating temperature range	-40° to 185°F (-40° to 85°C)
Storage temperature range	-40° to 212°F (-40° to 100°C)
Media temperature range	-40° to 212°F (-40° to 100°C)
CE mark	EN 61000-6-1 / 2 / 3 / 4
Vibration resistance to DIN EN 60068-2-6 at 10 to 500 Hz	≤ 20g
Environmental protection	IP 67 *(w/ ZBE 06 molded cable or flying lead)*
Electrical Specifications	
Supply voltage	10 to 30 VDC
Residual ripple suppy voltage	≤ 5%
Max supply current, 3-wire	25 mA *(plus switching current)*
Reverse polarity protection of the supply voltage, excess voltage, override and short circuit protection	Standard

Dimensions

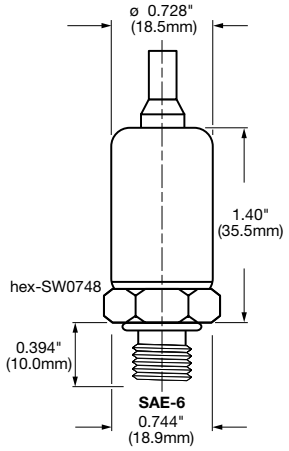
ø 0.728"
(18.5mm)
1.40"
(35.5mm)
hex-SW0748
0.394"
(10.0mm)
SAE-6
0.744"
(18.9mm)

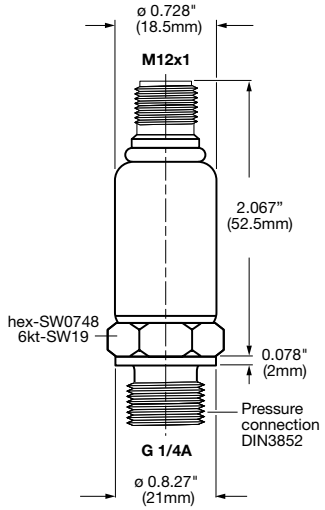
ø 0.728"
(18.5mm)
M12x1
2.067"
(52.5mm)
hex-SW0748
6kt-SW19
0.078"
(2mm)
Pressure
connection
DIN3852
G 1/4A
ø 0.8.27"
(21mm)

Min of 500 pieces required per year

EDS 810 Series
Factory Set Pressure Switch

Applications

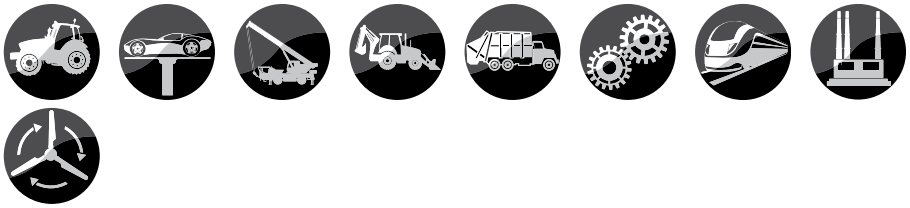

Description

The electronic pressure switch EDS 810 has been specially developed for use in volume production machines.

The highly compact unit has a very robust pressure sensor with thin-film strain gauge on a stainless steel membrane.

The transistor switching output is available with either N/C or N/O function.

The switching and switch-back point of the EDS 810 is factory-set according to customer specification.

Various pressure ranges between 0 to 500 psi and 0 to 9000 psi are available.

Special Features

- Accuracy ≤ ±0.5% BFSL
- Outstanding performance in terms of temperature effect and EMC
- Very compact design
- ECE type approval *(approved for road vehicles)*

Approvals

CE mark is a mandatory conformity mark on many products placed on the single market in the European Economic Area

Technical Details,

Sensor Specifications	
Measuring ranges - psi	500, 750, 1000, 1500, 3000, 6000, 9000
Overload pressure - psi	1160, 1160, 2900, 2900, 7250, 11600, 14500
Burst pressure - psi	2900, 2900, 7250, 7250, 14500, 29000, 29000
Mechanical connection	G1/4A DIN 3852 male *(bar ranges only)* SAE 6 9/16-18 male *(psi ranges only)* SAE 4 7/16-20 UNF 2A male
Tightening torque	SAE 6, G1/4: 15 lb-ft (20 Nm) SAE 4: 11 ft-lb (15Nm)
Parts in contact with media	Stainless steel, FPM seal
Accuracy (B.F.S.L.) including linearity, hysteresis, and repeatability	≤ ±0.5% BFSL.
Temperature compensation zero point	≤ ±0.0085% / °F typ. ≤ ±0.017% / °F max.
Temperature compensation over range	≤ ±0.0085% / °F typ. ≤ ±0.017% / °F max.
Long-term drift	≤ ±0.3% FS typ. / year
Life expectancy	10 million load cycles (0 to 100% FS)
Weight	Approximately 55 g
Switching Specifications	
Type	1 or 2 PNP outputs (N/C or N/O)
Repeatability	≤ ±0.1%
Switching current	500 mA per output
Set point	to be specified by customer
Reset point	to be specified by customer
Switching cycles	≥ 100 million
Switch delay time	approx. 32 ms *(standard)* 8 to 2000ms to be specified by customer *(in 8ms steps)*
Environmental Condition	
Compensated temperature range	-13° to 185°F (-25° to 85°C)
Operating temperature range	-40° to 185°F (-40° to 85°C)
Storage temperature range	-40° to 212°F (-40° to 100°C)
Media temperature range	-40° to 212°F (-40° to 100°C)
CE mark	EN 61000-6-1 / 2 / 3 / 4
Vibration resistance to DIN EN 60068-2-6 at 10 to 500 Hz	≤ 25g
Environmental protection	IP 67 or IP 69K *(depending on electrical connection)*
Electrical Specifications	
Supply voltage	8 to 32 VDC
Residual ripple suppy voltage	≤ 5%
Electrical connection	M12x1, 4-pole AMP DIN 72585 Baj., 3-pole Deutsch DT04-3P, 3-pole Deutsch DT04-4P, 4-pole AMP Superseal, 3-pole Packard Metri Pack Series 150, 3-pole AMP Junior Power Times, 3-pole 1 m open ended cable
Reverse polarity protection of the supply voltage, excess voltage, override and short circuit protection	Standard

Dimensions

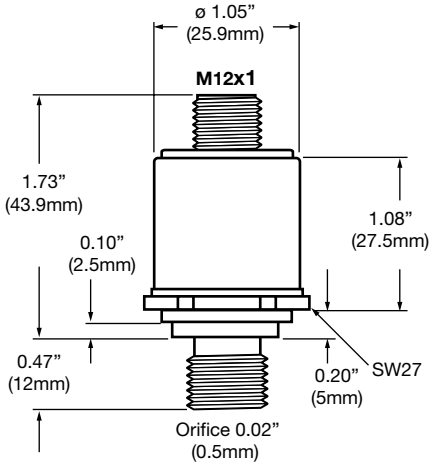

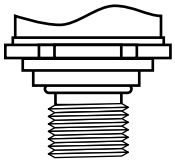

7/16-20UNF2A

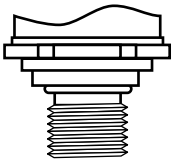

9/16-18UNF2A

Plug Connection

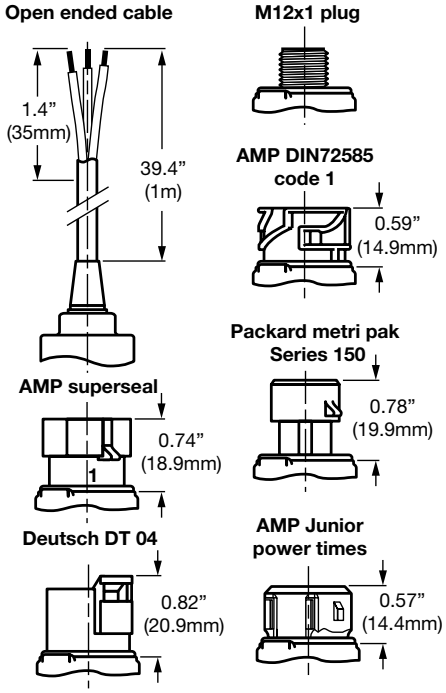

Min of 25 pieces required

EDS 4100 ATEX Series

Factory Set Absolute Pressure Switch Intrinsically Safe with ATEX Approval

Applications

Description

The pressure switch EDS 4100 in ATEX version, has been specially developed for use in potentially explosive atmospheres, and is based on the EDS 4000 series.

The switching and switch-back point, the function of the switching outputs as N/C or N/O, and the switching delay are permanently pre-set according to customer specification.

As with the industry version, the EDS 4100 in ATEX version has a ceramic measurement cell with thick-film strain gauge for measuring absolute pressure in the low pressure range.

Special Features

- Switching output permanently pre-set
- Accuracy ≤ ±0.5% BFSL
- Certificates:
  DEKRA EXAM BVS 07 ATEX E 041 X
- Various types of electrical connection
- Very small temperature error
- Excellent EMC characteristics
- Excellent long-term characteristics

Approvals

ATEX Approvals

I M1 EEx ia
II 1G EEx ia IIC T6
II 1/2 G EEx ia IIC T6
II 2G EEx ia IIC T6
II 1D IP6X T80°C

CE mark is a mandatory conformity mark on many products placed on the single market in the European Economic Area

Ex mark is a specific marking for explosive protection equipment

Technical Details

Sensor Specifications		
Measuring ranges - psi	15, 50	
Overload pressure - psi	45, 150	
Burst pressure - psi	70, 250	
Mechanical connection	G1/4A DIN 3852 male *(bar ranges only)* 1/4"-18 NPT male *(psi ranges only)*	
Tightening torque	G1/4: 15 lb-ft (20 Nm) 1/4" NPT: 30 lb-ft (40 Nm)	
Parts in contact with media	Sensor: Ceramic Mechanical connection: Stainless steel Seal: FPM or EPDM	
Accuracy (B.F.S.L.) including linearity, hysteresis, and repeatability	≤ ±0.5% BFSL.	
Temperature compensation zero point	≤ ±0.0085% / °F typ. ≤ ±0.017% / °F max.	
Temperature compensation over range	≤ ±0.0085% / °F typ. ≤ ±0.017% / °F max.	
Long-term drift	≤ ±0.3% FS typ. / year	
Life expectancy	10 million load cycles (0 to 100% FS)	
Weight	Approximately 150 g	
Switching Specifications		
Type	1 PNP transistor output (N/O or N/C)	
Repeatability	≤ ±0.1% FS max at 25 °C	
Ouput load	During Operation: Imax ≤ 34 mA	
Set point / reset point	to be specified by customer	
Switching cycles	≥ 100 million	
Switch delay time	approx. 32 ms *(standard)* 8 to 2000ms to be specified by customer *(in 8ms steps)*	
Environmental Condition		
Compensated temperature range	T6: -4° to 140°F (-20° to 60°C) T4/T5: -4° to 158°F (-20° to 70°C) T100: -4° to 185°F (-20° to 85°C)	
Operating temperature range	T6: -4° to 140°F (-20° to 60°C) T4/T5: -4° to 158°F (-20° to 70°C) T100: -4° to 185°F (-20° to 85°C)	
Max. ambient temperature T_a	T6: 140°F (60°C) T4/T5: 158°F (70°C)	**II 1 D** T100: 185°F (85°C)
Storage temperature range	-40° to 212°F (-40° to 100°C)	
Media temperature range	-4° to 140°/158°/185°F (-20° to 60°/70°/85°C)	
CE mark	EN 61000-6-1 / 2 / 3 / 4, EN 60079-0/11/26, IEC 61241-11	
Vibration resistance to DIN EN 60068-2-6 at 10 to 500 Hz	≤ 20g	
Environmental protection	IP 65, IP 67 *(depending on electrical connection)*	
Electrical Specifications		
Supply voltage	14 to 28 VDC	
Residual ripple suppy voltage	≤ 5%	
	I M1 / II 1G, 1/2G, 2G	**II 1D**
Max input current	100 mA	93 mA
Max input power	0.7 W	0.65 W
Max internal capacitance	33 nF	33 nF
Max internal inductance	0 H	0 H
Isolation voltage	125 VAC to housing *(standard)*	
Approved safety barriers	Pepperl & Fuch: Z787 Telematic Ex STOCK: MTL 7087	
Reverse polarity protection of the supply voltage, excess voltage, override and short circuit protection	Standard	

Application Areas

Code Type Code	1	2	3	8
Protection class	I M1 EEx ia	II 1G EEx ia IIC T4, T5, T6	II 2G EEx ia IIC II 1/2G EEx ia IIC T4, T5, T6	II 1D Ex iaD 20 T100°C
Certificate number	DEKRA EXAM BVS 07 ATEX E 041 X			
Zones / Categories	Group I Category M 1 mining Protection type: intrinsically safe ia with barrier	Group II Category 1G Gases Protection type: intrinsically safe ia with barrier Use in: Zone 0	Group II Category 2G, 1/2G Gases Protection type: intrinsically safe ia with barrier Use in: Zone 1 & 2 Retrofit in: Zone 0	Group II Category iD Dust Protection type: intrinsically safe ia with barrier Use in: Zone 20, 21, 22 Enclosure provides no protection!
Temperature Range		T6: Tamb = 60°C T4, T5: Tamb = 70°C		T100: Tamb = 85°C
Electrical Connection *(see model code)*	5, 6	6	5, 6	6

Dimensions

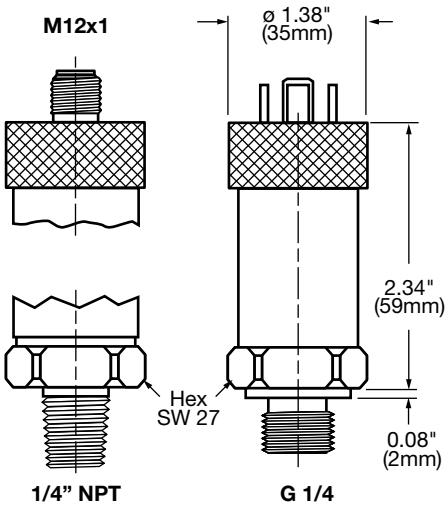

Min of 25 pieces required

EDS 4300 ATEX Series

Low Pressure Switch
Intrinsically Safe with ATEX Approval

Applications

Description

The electronic pressure switch EDS 4300 in ATEX version, has been specially developed for use in potentially explosive atmospheres, and is based on the EDS 4000 series.

The switching and switch-back point, the function of the switching outputs as N/C or N/O, and the switching delay are permanently pre-set according to customer specification.

As with the industry version, the EDS 4300 in ATEX version has a ceramic measurement cell with thick film strain gauge for measuring relative pressure in the low pressure range.

Special Features

- Switching output permanently pre-set
- Accuracy ≤ ±0.5% BFSL
- Certificates:
  DEKRA EXAM BVS 07 ATEX E 041 X
- Various types of electrical connection
- Very small temperature error
- Excellent EMC characteristics
- Excellent long-term characteristics

Approvals

ATEX Approvals

I M1 EEx ia
II 1G EEx ia IIC T6
II 1/2 G EEx ia IIC T6
II 2G EEx ia IIC T6
II 1D IP6X T80°C

CE mark is a mandatory conformity mark on many products placed on the single market in the European Economic Area

Ex mark is a specific marking for explosive protection equipment

Technical Details

Sensor Specifications		
Measuring ranges - psi	15, 50, 100, 150, 250, 500	
Overload pressure - psi	45, 150, 290, 450, 725, 1500	
Burst pressure - psi	70, 250, 400, 650, 1000, 2500	
Mechanical connection	G1/4A DIN 3852 male *(bar ranges only)* 1/4"-18 NPT male *(psi ranges only)*	
Tightening torque	Approx. 15 lb-ft (20 Nm) *(G1/4A DIN 3852 only)* Approx. 30 lb-ft (40 Nm) *(1/4"-18 NPT only)*	
Parts in contact with media	Sensor: Ceramic Mechanical connection: Stainless steel Seal: FPM or EPDM	
Accuracy (B.F.S.L.) including linearity, hysteresis, and repeatability	≤ ±0.5% BFSL.	
Temperature compensation zero point	≤ ±0.0085% / °F typ.	≤ ±0.017% / °F max.
Temperature compensation over range	≤ ±0.0085% / °F typ.	≤ ±0.017% / °F max.
Long-term drift	≤ ±0.3% FS typ. / year	
Life expectancy	10 million load cycles (0 to 100% FS)	
Weight	Approximately 150 g	
Switching Specifications		
Type	1 PNP transistor output (N/O or N/C)	
Repeatability	≤ ±0.1% FS max at 25°C	
Ouput load	During Operation: Imax ≤ 34 mA	
Set point / reset point	to be specified by customer	
Switching cycles	≥ 100 million	
Switch delay time	approx. 32 ms *(standard)* 8 to 2000ms to be specified by customer *(in 8ms steps)*	
Environmental Condition		
Compensated temperature range	T6: -4° to 140°F (-20° to 60°C) T4/T5: -4° to 158°F (-20° to 70°C) T100: -4° to 185°F (-20° to 85°C)	
Operating temperature range	T6: -4° to 140°F (-20° to 60°C) T4/T5: -4° to 158°F (-20° to 70°C) T100: -4° to 185°F (-20° to 85°C)	
Max. ambient temperature T_a	T6: 140°F (60°C) T4/T5: 158°F (70°C)	**II 1 D** T100: 185°F (85°C)
Storage temperature range	-40° to 212°F (-40° to 100°C)	
Media temperature range	-4° to 140°/158°/185°F (-20° to 60°/70°/85°C)	
CE mark	EN 61000-6-1 / 2 / 3 / 4, EN 60079-0/11/26, IEC 61241-11	
Vibration resistance to DIN EN 60068-2-6 at 10 to 500 Hz	≤ 20g	
Environmental protection	IP 65, IP 67 *(depending on electrical connection)*	
Electrical Specifications		
Supply voltage	14 to 28 VDC	
Residual ripple suppy voltage	≤ 5%	
	I M1 / II 1G, 1/2G, 2G	**II 1D**
Max input current	100 mA	93 mA
Max input power	0.7 W	0.65 W
Max internal capacitance	33 nF	33 nF
Max internal inductance	0 H	0 H
Isolation voltage	125 VAC to housing *(standard)*	
Approved safety barriers	Peperl & Fuch: Z787 Telematic Ex STOCK: MTL 7087	
Reverse polarity protection of the supply voltage, excess voltage, override and short circuit protection	Standard	

Application Areas

Code Type Code	1	2	3	8
Protection class	I M1 EEx ia	II 1G EEx ia IIC T4, T5, T6	II 2G EEx ia IIC II 1/2G EEx ia IIC T4, T5, T6	II 1D Ex iaD 20 T100°C
Certificate number	DEKRA EXAM BVS 07 ATEX E 041 X			
Zones / Categories	Group I Category M 1 mining Protection type: intrinsically safe ia with barrier	Group II Category 1G Gases Protection type: intrinsically safe ia with barrier Use in: Zone 0	Group II Category 2G, 1/2G Gases Protection type: intrinsically safe ia with barrier Use in: Zone 1 & 2 Retrofit in: Zone 0	Group II Category iD Dust Protection type: intrinsically safe ia with barrier Use in: Zone 20, 21, 22 Enclosure provides no protection!
Temperature Range		T6: Tamb = 60°C T4, T5: Tamb = 70°C		T100: Tamb = 70°C
Electrical Connection *(see model code)*	5, 6	6	5, 6	6

Dimensions

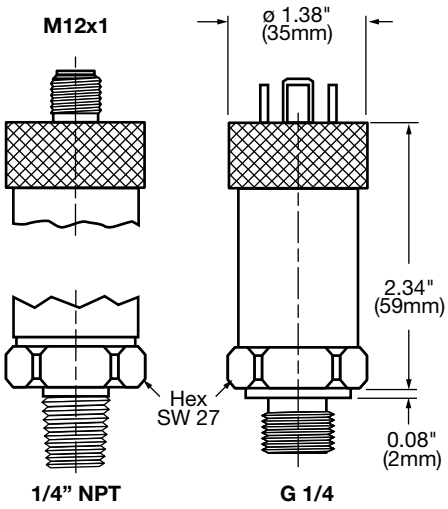

Min of 25 pieces required

EDS 4400 ATEX Series

High Pressure Switch
Intrinsically Safe with ATEX Approval

Applications

Description

The electronic pressure switch EDS 4400 in ATEX version, has been specially developed for use in potentially explosive atmospheres, and is based on the EDS 4000 series.

The switching and switch-back point, the function of the switching outputs as N/C or N/O, and the switching delay are permanently pre-set according to customer specification.

As with the industry version, the EDS 4400 in ATEX version has a stainless steel measurement cell with thin-film strain gauge for measuring relative pressure in the high pressure range.

Special Features

- Switching point and switch-back point permanently pre-set according to customer specification
- Accuracy ≤ ±0.5% BFSL
- Certificates:
  DEKRA EXAM BVS 07 ATEX E 041 X
- Various types of electrical connection
- Very small temperature error
- Excellent EMC characteristics
- Excellent long-term characteristics

Approvals

ATEX Approvals

I M1 EEx ia
II 1G EEx ia IIC T6
II 1/2 G EEx ia IIC T6
II 2G EEx ia IIC T6
II 1D IP6X T80°C

CE mark is a mandatory conformity mark on many products placed on the single market in the European Economic Area

Ex mark is a specific marking for explosive protection equipment

Technical Details

Sensor Specifications		
Measuring ranges - psi	500, 1000, 3000, 6000, 9000	
Overload pressure - psi	1160, 2900, 7250, 11600, 11600, 14500	
Burst pressure - psi	2900, 7250, 14500, 29000, 29000, 29000	
Mechanical connection	SAE 6 male *(standard psi ranges only)* G1/4A DIN 3852 male *(bar ranges only)*	
Tightening torque	15 lb-ft (20 Nm)	
Parts in contact with media	Sensor: Stainless steel 1.4542 Mechanical connection: Stainless steel 1.4542, 1.4301, 1.4435, 1.4571, 1.4404, 316L, 304 Seal: FPM (SAE 6, G1/4)	
Accuracy (B.F.S.L.) including linearity, hysteresis, and repeatability	≤ ±0.5% BFSL.	
Temperature compensation zero point	≤ ±0.0085% / °F typ.	≤ ±0.017% / °F max.
Temperature compensation over range	≤ ±0.0085% / °F typ.	≤ ±0.017% / °F max.
Long-term drift	≤ ±0.1% FS typ. / year	
Life expectancy	10 million load cycles (0 to 100% FS)	
Weight	Approximately 150 g	
Switching Specifications		
Type	1 PNP transistor output (N/O or N/C)	
Repeatability	≤ ±0.1% FS max at 25°C	
Ouput load	During Operation: Imax ≤ 34 mA	
Set point / reset point	to be specified by customer	
Switching cycles	≥ 100 million	
Switch delay time	approx. 32 ms *(standard)* 8 to 2000ms to be specified by cust. *(in 8ms steps)*	
Reaction time	< 10 ms	
Environmental Condition		
Compensated temperature range	T6: -4° to 140°F (-20° to 60°C) T4/T5: -4° to 158°F (-20° to 70°C) T100: -4° to 185°F (-20° to 85°C)	
Operating temperature range	T6: -4° to 140°F (-20° to 60°C) T4/T5: -4° to 158°F (-20° to 70°C) T100: -4° to 185°F (-20° to 85°C)	
Max. ambient temperature T_a	T6: 140°F (60°C) T4/T5: 158°F (70°C)	**II 1 D** T100: 185°F (85°C)
Storage temperature range	-40° to 212°F (-40° to 100°C)	
Media temperature range	-4° to 140°/158°/185°F (-20° to 60°/70°/85°C)	
CE mark	EN 61000-6-1 / 2 / 3 / 4, EN 60079-0/11/26, IEC 61241-11	
Vibration resistance to DIN EN 60068-2-6 at 10 to 500 Hz	≤ 20g	
Environmental protection	IP 65, IP 67 *(depending on electrical connection)*	
Electrical Specifications		
Supply voltage	14 to 28 VDC	
Residual ripple suppy voltage	≤ 5%	
	I M1 / II 1G, 1/2G, 2G	**II 1D**
Max input current	100 mA	93 mA
Max input power	0.7 W	0.65 W
Max internal capacitance	33 nF	33 nF
Max internal inductance	0 H	0 H
Isolation voltage	125 VAC to housing *(standard)*	
Approved safety barriers	Pepperl & Fuch: Z787 Telematic Ex STOCK: MTL 7087	
Reverse polarity protection of the supply voltage, excess voltage, override and short circuit protection	Standard	

Application Areas

Code Type Code	1	2	3	8
Protection class	I M1 EEx ia	II 1G EEx ia IIC T4, T5, T6	II 2G EEx ia IIC II 1/2G EEx ia IIC T4, T5, T6	II 1D Ex iaD 20 T100°C
Certificate number	DEKRA EXAM BVS 07 ATEX E 041 X			
Zones / Categories	Group I Category M 1 mining Protection type: intrinsically safe ia with barrier	Group II Category 1G Gases Protection type: intrinsically safe ia with barrier Use in: Zone 0	Group II Category 2G, 1/2G Gases Protection type: intrinsically safe ia with barrier Use in: Zone 1 & 2 Retrofit in: Zone 0	Group II Category iD Dust Protection type: intrinsically safe ia with barrier Use in: Zone 20, 21, 22 Enclosure provides no protection!
Temperature Range		T6: Tamb = 60°C T4, T5: Tamb = 70°C		T100: Tamb = 85°C
Electrical Connection *(see model code)*	5, 6	6	5, 6	6

Dimensions

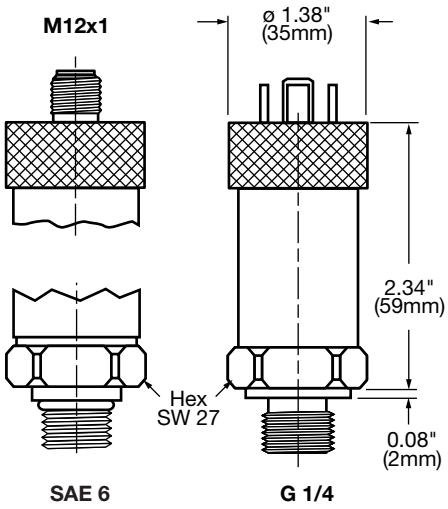

Min of 25 pieces required

EDS 4000 Series

Factory Set Pressure Switch CSA Explosion Proof, ATEX & IECEx Explosion & Flame Proof

Applications

Description

The EDS 4000 series electronic pressure switch with triple approval *($_cCSA_{us}$, ATEX Exd, IECExd)* allows installtion world wide in any hazardous environment. This also optimizes spare part stock and prevents technicians to apply the wrong pressure switch to their systems.

The switch is using our highly reliable and proven thin film pressure sensor which is welded to the connection so no internal seal is required. All welded parts as well as the housing is made out of industrial standard stainless steels toprevent corrosion. The triple approval is also available with NACE compliant materials.

The main areas of applications for this pressure switch are oil and gas *(BOP's, top drives, turn tables, control panels)* and mining *(underground vehicles, hydraulic drives)* as well as other hazardous areas.

Special Features

- Accuracy ≤ ±0.5% BFSL
- Option of PNP or NPN switching outputs
- High switching output capacity
- Very small temperature error
- Excellent EMC characteristics
- Excellent long-term characteristics

Approvals

$_cCSA_{us}$ Explosion Proof *(Seal Not Required)*
Class I Group A, B, C, D
Class II Group E, F, G
Class III
Type 4

ATEX Flame Proof
I M2 Ex d I
II 2G Ex d IIC T6, T5

IECEx Flame Proof
Ex d I Mb
Ex d IIC T6, T5 Gb

Technical Details,

Sensor Specifications	
Measuring Ranges - psi	100, 300, 500, 1000, 1500, 3000, 5000, 6000, 9000, 10000, 15000
Overload Pressure - psi	290, 1160, 1160, 2900, 2900, 7250, 11600, 11600, 14500, 14500, 23200
Burst Pressure - psi	1450, 2900, 2900, 7250, 7250, 14500, 29000, 29000, 29000, 29000, 43500
Mechanical Connection	1/4"-18 NPT, male 1/4"-18 NPT, female SAE 6 9/16-UNF 2A G1/4A DIN 3852 *(bar ranges only)* SF 250 CX20, Autoclave (7/16-20 UNF 2B)
Tightening Torque	Approx. 15 lb-ft (20 Nm) Approx. 30 lb-ft (40 Nm) *(1/4"-18 NPT only)*
Parts in Contact with Media	1.4542, 1.4301, 304, 630
Housing material	1.4435, 1.4404, 316L
Accuracy (B.F.S.L.) including linearity, hysteresis, and repeatability	≤ ±0.5% BFSL.
Temperature compensation zero point	≤ ±0.0085% / °F typ. ≤ ±0.017% / °F max.
Temperature compensation over range	≤ ±0.0085% / °F typ. ≤ ±0.017% / °F max.
Long-term drift	≤ ±0.3% FS typ. / year
Life Expectancy	10 million load cycles (0 to 100% FS)
Weight	Approximately 280 g
Switching Specifications	
Type	1 or 2 PNP outputs *(NPN upon request)*
Repeatability	≤ ±0.1% FS max.
Switching Current	1 Switching ouput 1.2A 2 Switching outputs 1.0A each
Set Point	to be specified by customer
Reset Point	to be specified by customer
Switch delay time	approx. 32 ms (standard) 8 to 2000ms to be specified by customer *(in 8ms steps)*
Switching Cycles	≥ 100 million
Environmental Condition	
Compensated temperature range	T5: -13° to 176°F (-25° to 80°C) T6: -13° to 140°F (-25° to 60°C)
Operating temperature range[1)]	T5: -40° to 176°F (-25° to 80°C) T6: -40° to 140°F (-40° to 60°C)
Storage temperature range	-40° to 212°F (-40° to 100°C)
Media temperature range[1)]	-40° to 212°F (-40° to 100°C) -4° to 212°F (-20° to 100°C) with FPM
CE mark	EN 61000-6-1 / 2 / 3 / 4, IEC 600079-0 / 1
Vibration resistance to DIN EN 60068-2-6 at 10 to 500 Hz	≤ 20g
Environmental Protection	IP 65 *(vented gauge)* / IP 69K *(sealed gauge)*
Electrical Specifications	
Supply voltage	12 to 30 VDC
Residual ripple suppy voltage	≤ 5%
Current consumption	approximately 25 mA *(inactive switching output)*
Reverse polarity protection of the supply voltage, excess voltage, override and short circuit protection	Standard

1) With SAE or G1/4, in combination with FPM seal -4°F (-20°C)

Application Areas

Protection class	$_{C}CSA_{US}$	Explosion Proof Seal Not Required	
	ATEX	Flame Proof	
	IECEx	Flame Proof	
Certificate number	ATEX KEMA 10ATEX0100 X CSA MC 224264 IECEx KEM 10.0053X		
Zones / Categories	$_{C}CSA_{US}$	Class I Class II Class III Type 4	Group A, B, C, D Group E, F, G
	ATEX	I M2 II 2G	Ex d I Ex d IIC T6, T5
	IECEx	Ex d I Mb Ex d IIC T6, T5 Gb	
Electrical Connection *(see model code)*	9; G		

Dimensions

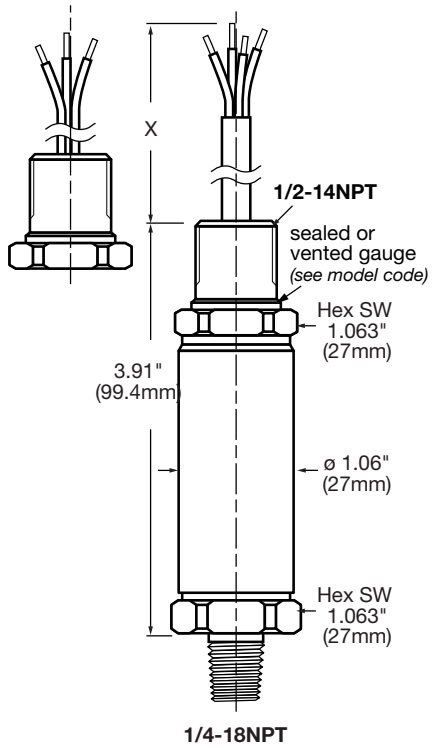

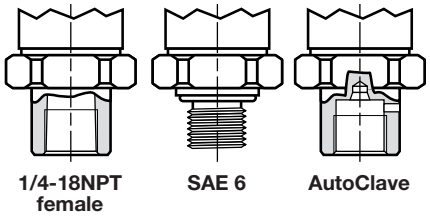

1620 Series
TestPoints

Applications

- Pressure measurement with gauges or sensors
- Fluid sampling
- Air bleeding

Description

HYDAC series 1620, guided piston design, TestPoints are compact, self sealing couplings that provide access to hydraulic and pneumatic systems for pressure measurement to 9000 psi. Mating adapters or hose connections can be connected without loss of fluid while the system is operating. TestPoints can also be used to take oil samples or to bleed air from hydraulic systems. They are available in 1620 (M16x2.0) connection threads with a variety of screw-in port configurations.

Technical Details

Specifications	
Max. Rated Pressure	9000 psi (630 bar)
Fluid Compatibility	Petroleum based fluids Gaseous media
Materials	Zinc plated steel body *(standard)* Zinc plated metal cap *(standard)*
Seals	Buna-N *(standard)* Viton *(optional)*
Temperature with metal cap and Buna-N seals:	-22°F to 248°F (-30°C to 120°C)
Options	Anti-vibration seal for metal cap

Features

- Can be coupled and uncoupled under pressure without system shutdown or fluid loss
- Patented guided piston design for leak free performance at operating pressure to 9000 psi
- HYDAC guided piston design provides the following advantages over ball seal design:
  - Higher working Pressure
  - Better sealing characteristics particularly under high vibration
  - Less susceptible to fluid contamination
  - Can be used for gases as well as fluid

1620 Series Adapters
Direct Gauge Adapter

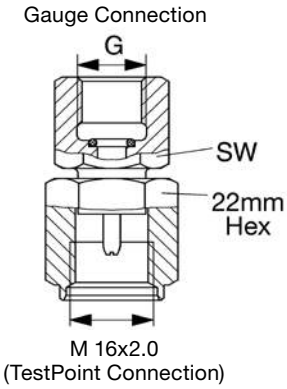

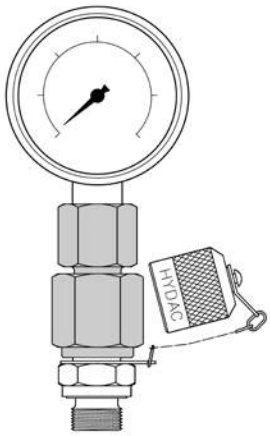

Thread G	Pmax	SW	Part No.
ISO 228-G 1/4	9000 psi (630 bar)	19	06003824
ISO 228-G 1/2	9000 psi (630 bar)	27	06003825
1/4 NPT	9000 psi (630 bar)	19	06003769

Part numbers listed in RED italics are non-standard items - Minimum quantities may apply - Contact HYDAC for information and availability

Dimensions

Standard 1620 TestPoint connection with cap

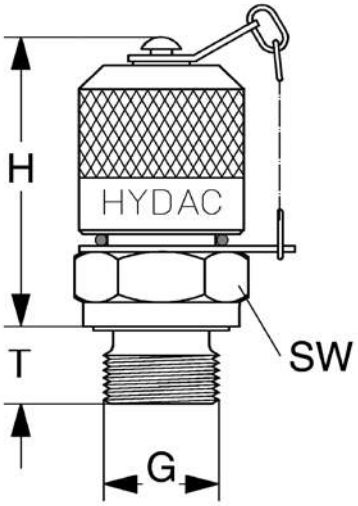

Select desired connection in chart to the right

Carbon Steel TestPoints *(Zinc-Plated, Buna N Seals)*

Thread G	Pmax	H (mm)	T (mm)	SW (mm)	Part No.
1/8 NPTF	5800 psi (400 bar)	33	13	17	06003734
1/4 NPTF	5800 psi (400 bar)	33	16.5	17	00639645
7/16-20 UNF	9000 psi (630 bar)	37	9	17	06003735
9/16-18 UNF	9000 psi (630 bar)	36	10	19	06003737
M 8x1	3600 psi (250 bar)	41	8.5	17	06003731
M 10x1	3600 psi (250 bar)	37.5	8.5	17	00629237
M 12x1.5	9000 psi (630 bar)	36	10	17	00632615
M 14x1.5	9000 psi (630 bar)	36	10	19	00632248
M 16x1.5	9000 psi (630 bar)	36	10	22	06003732
ISO 228-G 1/8	5800 psi (400 bar)	38	8	17	00689901
ISO 228-G 1/4	9000 psi (630 bar)	36	10	19	00680107
ISO 228-G 3/8	9000 psi (630 bar)	36	10	22	06003733
ISO 7/I-R 1/8	5800 psi (400 bar)	33	13	17	06003738
ISO 7/I-R 1/4	9000 psi (630 bar)	33	13	17	06003739

Carbon Steel TestPoints *(Zinc-Plated, Fluorelastomer Seals)*

Thread G	Pmax	H (mm)	T (mm)	SW (mm)	Part No.
1/8 NPTF	5800 psi (400 bar)	33	13	17	06007199
1/4 NPTF	5800 psi (400 bar)	33	13	17	06007200
7/16-20 UNF	9000 psi (630 bar)	37	9	17	06007029
9/16-18 UNF	9000 psi (630 bar)	36	10	19	06007030
ISO 228-G 1/4	9000 psi (630 bar)	36	10	19	00606304

Stainless Steel TestPoints *(Fluorelastomer Seals)*

Thread G	Pmax	H (mm)	T (mm)	SW (mm)	Part No.
1/4 NPTF	5800 psi (400 bar)	33	13	17	02701487
7/16-20 UNF	5800 psi (400 bar)	33	16.5	17	02701486

Dimensions are for general information only, all critical dimensions should be verified by requesting a certified print.
* for port configuration drawings contact HYDAC.

Micro Bore Flexible Hoses

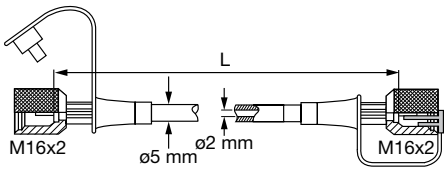

L (inches)	L (mm)	Part No.
8	200	06003723
12	300	06003724
16	400	00632633
20	500	06003725
25	630	06003726
31	800	00682857
39	1000	00632634
49	1250	06003727
59	1500	00682858
79	2000	00682859
98	2500	00682860
126	3200	06003728
157	4000	06003729
197	5000	06003730

Specifications

- Maximum working pressure 9000 psi (630 bar) at 122˚F (50°C)
  (see pressure utilization factor to adjust for higher temperatures)
- Suitable for petroleum based fluids
- Temperature range -4° to 122°F (-20° to 50°C)
- Polyamid core with polyester braid reinforcement and polyamid jacket
- Plastic dust cap
- 1620 female connection at both ends
- Bending radius: min. 20mm
- Hose ID ø 2mm
- Custom Hose Assemblies Available:
  NPT Male Thread, NPT Female Thread, JIC Male Hose, JIC Female swivel hose ends

Pressure Utilization Factor for Hoses

Operating Temp.	Factor	Max. Pressure
122°F (50°C)	100%	9000 psi (630 bar)
176°F (80°C)	86%	7740 psi (534 bar)
212°F (100°C)	77%	6930 psi (478 bar)

Part numbers listed in RED italics are non-standard items - Minimum quantities may apply - Contact HYDAC for information and availability

TFP 100 Series
Temperature Probe

Applications

Description

The temperature probe TFP 100 was developed mainly for tank mounting. The PT 100 precision resister in 4-conductor design can be connected directly to HYDAC temperature switches EDS 3800, ETS 380 and ETS 1700.

The standardised electrical connection also means that other evaluation or control systems *(e.g. PLC)* can easily be connected.

For adaptation to different applications and fluids, a nickel plated brass mounting sleeve which is pressure resistant up to 145 psi (10 bar) is also available as an accessory.

Technical Details,

Temperature probe TFP 100	
Fluid temperature range	-40° to 257°F (-40° to 125°C)
Electrical connection	Male Binder series 714 M18, 4 pole M12x1, 4 pole
Parts in contact with fluid	Brass
CE mark	EN 61000-6-1 / 2 / 3 / 4
Supply voltage	9 to 35 VDC
Protective Sleev for Tank Mounting the TFP (Accessory, not supplied as standard)	
Pressure resistance	145 psi (10 bar)
Parts in contact with fluid	CuZn39Pb3 (brass), nickel plated

Special Features

- Measurement circuit configured as four-conductor circuit
- Simple to install
- For universal applications

Approvals

CE mark is a mandatory conformity mark on many products placed on the single market in the European Economic Area

Model Code

TFP 10 X - 000

Separate Temperature Probe

Electrical Connection
4 = 4 pole Binder series 714 M18 *(connector supplied)*
6 = 4 pole M12x1 *(connector not supplied)*

Modification Number
000 = Standard

Pin Connection

Binder 714 M18

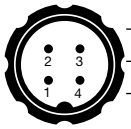

Pin	
1	+Supply
2	+ Signal
3	- Signal
4	- Supply

M12x1, 4 pole

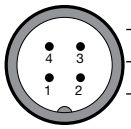

Pin	
1	+Supply
2	+ Signal
3	- Signal
4	- Supply

Dimensions

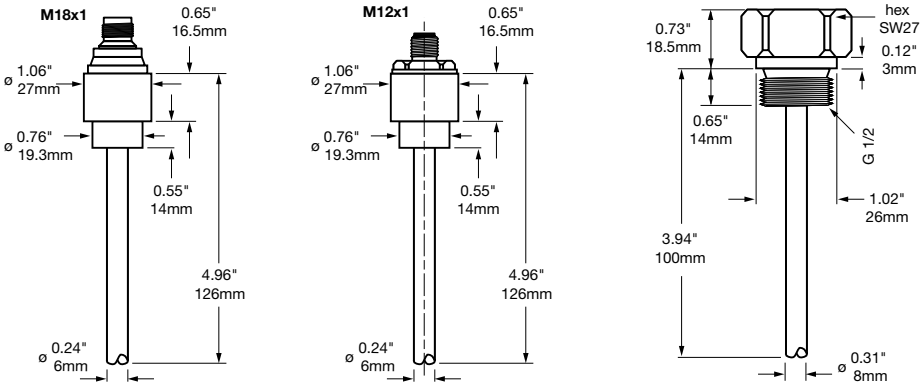

ZBM 3200 Protective Cover

Part # 03201919

For use with EDS, ETS and ENS 3000 series products.
Designed to provide additional protection in harsh environments.

Mounting Kits

Photo	Description	Part No.
	EDS 1600/1700 and ETS 1600/1700	00257492
	ZBM 300 Wall Mounting Clamp for EDS/ETS 300	00906385
	ZBM 310 Wall Mounting Clamp for EDS/ETS 3000	06011511
	Clamping Kit	00435812

Photo	Description	Part No.
	ZBM 3000 Screw Version Mounting Clamp	03184630
	ZBM 3100 Weld Version Mounting Clamp	03184632
	EDS 601 Mounting Clamp	00905404

Mechanical Adapters

A Connection	B Connection	Model Code Description	Part No.	Dimenions
G 1/4 (F)	1/4” NPT (M)	Adapter G 1/4 (F) to 1/4” NPT (M) stainless steel	02701407	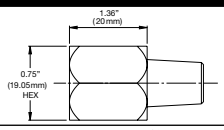
G 1/4 (F)	G 1/4 (F)	Adapter G 1/4 (F) to G 1/4 (F)	02063435	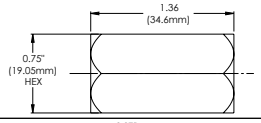
G 1/4 (F)	SAE-4 (M) JIC37	Adapter G 1/4 (F) to SAE-4 (M) JIC 37	02700841	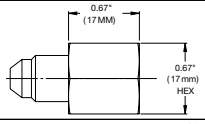
G 1/4 (F)	SAE-6 (M)	Adapter G 1/4 (F) to SAE-6 (M)	02055566	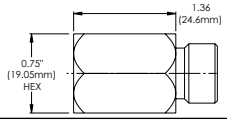
G 1/4 (F)	1/4” NPT (M)	Adapter G 1/4 (F) to 1/4” NPT (M) Stainless Steel	02055899	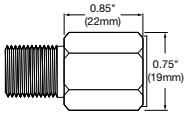
G 1/4 (F)	G 1/4 (M)	Aligning adapter for EDS 300	02700947	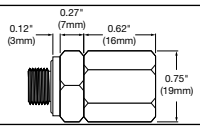
G 1/4 (F)	G 1/2 (M)	ZBM 01 DIN 16288	00257276	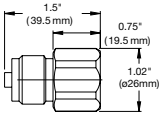
G 1/4 (F)	G 1/2 (M)	ZBM 02 DIN 3852	00257277	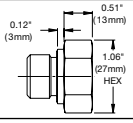
G 1/4 (F)	G 1/4 (M) w/ 0.3mm (Snubber)	ZBM 09	00907367	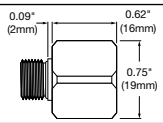
G 1/4 (F)	G 1/2 (F)	ZBM 10	00257764	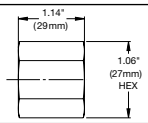
G 1/4 (F)	G 1/4 (M) w/ 0.5mm (Snubber)	ZBM 13	00906968	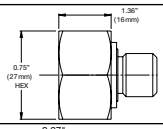
G 1/4 (F)	G 1/4 (M)	ZBM 14	00907818	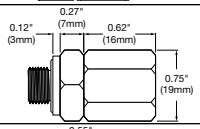
G 1/4 (M)	G 1/4 (M)	ZBM 03	00257163	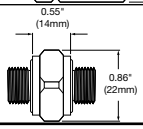

Mechanical Adapters cont.

A Connection	B Connection	Model Code Description	Part No.	Dimenions
SAE-24 37°	M1 1/2 BSPP (M)	Adapter SAE-24 37° to M1 1/2 BSPP (M)	02700542	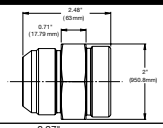
SAE-4 (M)	1/4” NPT (M)	Adapter SAE-4 (M) to 1/4” NPT (M)	02701426	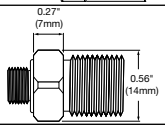
SAE-6 (F)	1/4 NPT (M)	Adapter SAE-6 (F) to 1/4 NPT (M)	02701430	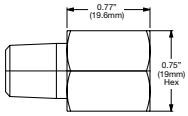
SAE-6 (F)	G 1/4 (M)	Adapter SAE-6 (F) to G 1/4 (M)	02701429	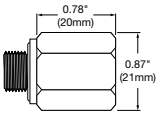
SAE-6 (F)	1/4 NPT (M)	Adapter SAE-6 (F) to 1/4 NPT (M)	02701673	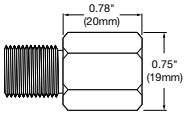
SAE-8 (M) 37°	G 1/2 (M)	Adapter SAE-8 (M) 37° to G 1/2 (M)	02700541	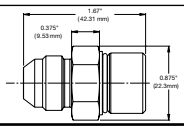

Snubber Adapters

A Connection	B Connection	Model Code Description	Part No.	Dimensions
G 1/4 (F)	SAE-6 (M)	Snubber 0.5mm	02067166	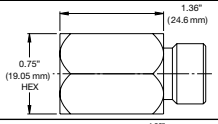
G 1/4 (F)	G 1/4 (M)	ZBM 13 0.5mm Snubber	00906968	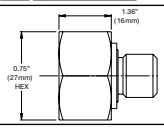
SAE-6 (F)	SAE-6 (M)	ZBM 15 0.5mm Snubber	00907750	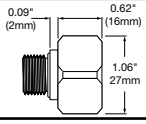

Mechanical Adapters

A Connection	B Connection	Model Code Description	Part No.	Dimensions
G 3/4” BSPP		ZBM 19 ENS 3000 Install Kit (G 3/4 BSPP) (Bulkhead)	00908738	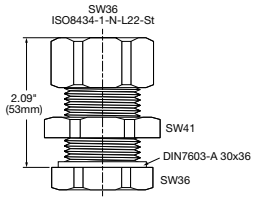
G 3/4 BSPP		ZBM 20 ENS 3000 Adapter (G 3/4 BSPP)	00908739	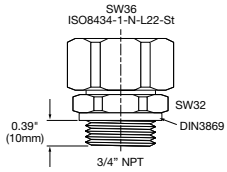
M16x2.0	1/4 NPT	Testpoint Direct Gauge Adapter 1620 (1/4 NPT)	06003769	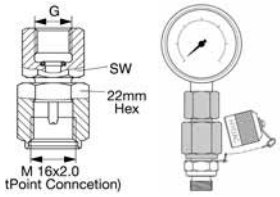
M16x2.0	SAE-4	Testpoint Direct Gauge Adapter 1620 (7/16-20 UNF)	02083643	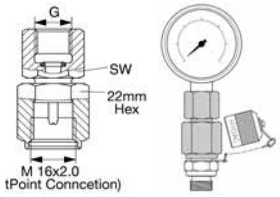
M16x2.0	G 1/4	Testpoint Direct Gauge Adapter 1620 (G 1/4)	06003824	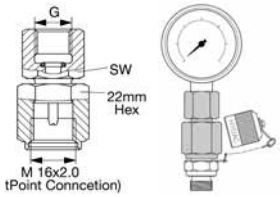
M16x2.0	G 1/2	Testpoint Direct Gauge Adapter 1620 (G 1/2)	06003825	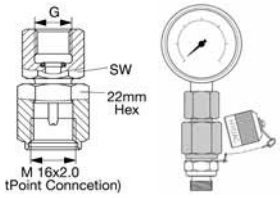

Electrical Connectors

Photo	Part Number	Description
	00905701	ZBE 01 Hirschmann DIN 43650 90°
	02701774	ZBE 01 Hirschmann 180° w/ 3' Molded Cable
	02072888	ZBE 02 Binder M18 w/ 15' cable
	00609479	ZBE 02 4 Pole M18 180°
	02082471	ZBE 02 M18 w/ 15' cable *(modified)*
	02072889	ZBE 03 Binder M18 90° w/ 15' cable
	00609480	ZBE 03 4 Pole M18 90°
	02082472	ZBE 03 M18 w/ 15' cable *(modified)*
	00258011	ZBE 04 Hirschmann DIN 43650 to Binder M18
	02701462	ZBE 06 4 Pole M12 large dia w/o cable
	02701484	ZBE 06 180° M12 4-pole quick
	06006788	ZBE 06 90° M12 4 Pole
	02701196	ZBE 06-02-4 4 Pole M12 90° w/ 6' cable
	02701197	ZBE 06-05-4 4 Pole M12 90° w/ 15' cable

Photo	Part Number	Description
	02701775	ZBE 08 5 Pole M12 large dia w/o cable
	06006786	ZBE 08 5 Pole M12 90°
	06006792	ZBE 08-02 5 Pole M12 w/ 6' cable
	06006791	ZBE 08-05 5 Pole M12 w/ 15' cable
	06023102	ZBE 08-S-10 5 Pole M12, shielded cable
	00654527	ZBE 10 Binder M18
	00909695	ZBE 25 Reset Adapter
	06040851	ZBE 30-02 M12x1 w/ 6' cable for HMG
	06040852	ZBE 30-05 M12x1 w/ 15' cable for HMG
	03236597	ZBE 34 M12/Binder M18 for HMG
	03236601	ZBE 35 M12/Hirschmann DIN 43650 for HMG
	00909737	ZBE 36 HMG 3000 - AS 1000
	03224436	ZBE 38 Y-adaptor for HMG 3000

HYDAC Other Products

Accumulators

- Bladder Accumulators
- Diaphragm Accumulators
- Piston Accumulators
- Nitrogen Bottles
- Pulsation Dampeners
- Thermal Fuse Caps
- Safety & Shut-off Blocks
- Charging & Gauging Units
- Permanent Gauging Blocks
- Mounting Components
- Sizing Information
- Spare Parts, Seal Kits & Tools

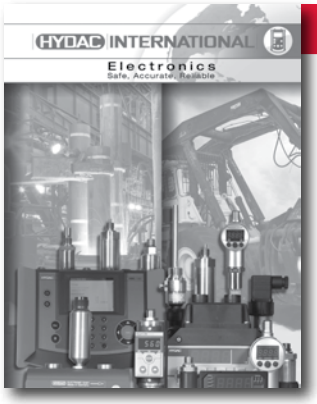

Electronics

- Pressure Transducers
- Special Environment Transducers
- Pressure Switches
- Display Units
- Temperature Transducers
- Temperature Switches
- Level Sensors
- Flow Sensors
- Diagnostic Equipment
- Adapters
- Connectors
- Mounting Kits
- Demonstration Kits

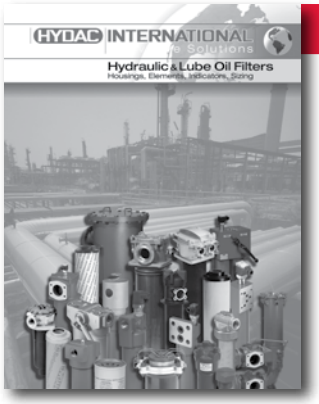

Hydraulic & Lube Oil Filters

- Inline Filters
- Inline Duplex Filters
- In-Tank Filters
- In-Tank Inline Duplex Filters
- In-Tank Return Line Filters
- In-Tank Suction Filters
- Inside Tank Filters
- Manifold Mount Filters
- Modular Stacking Filters
- Manifold Cartridge Filters
- Low, Med. & High Press. Filters
- Filter Elements
- Clogging Indicators

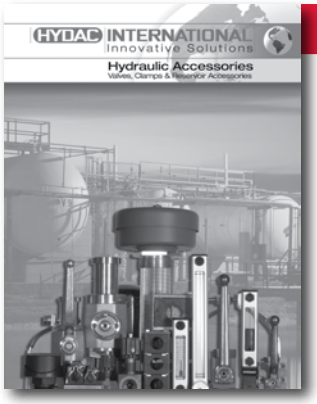

Hydraulic Accessories

Valves
- High & Low Press. Ball Valves
- Flow Control Valves
- Hose Break Valves
- Metric Cartridge Valves

Clamps
- DIN 3015 Clamps
- Standard Clamps
- Custom Solutions

Accessories
- Breathers & Filler Breathers
- Fluid Level Indicators
- Suction Strainers
- Gauge Isolators
- TestPoints

Cartridge Valves & Manifolds

- Pressure Control Valves
- Pressure Relief Valves
- Pressure Reducing/ Relieving Valves
- Flow Control & Regulator Valves
- Check Valves
- Counterbalance Valves
- Solenoid Control Valves
- Directional Control Valves
- Proportional Valves
- Solenoid Coils
- Line Bodies & Form Tools
- Manifold Accessories
- Seal Kits & Adjustment Kits

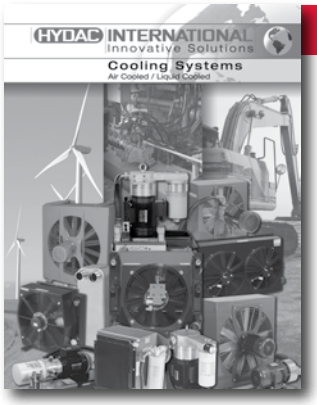

Cooling Systems

- Air Cooled Oil Coolers
- Air Cooling Systems for Water Glycol
- Air Cooled Oil Coolers for Mobile Applications
- Pump/Filter/Cooler Units
- Heat Exchangers
- Accessories
  - Adjustable Temperature Switches
  - Thermostatic Bypasses
  - Integrated Bypasses
  - Compatible Filters
  - Compatible Clogging Indicators

Mobile Hydraulics

- Sectional & Monoblock Configurations
- Manual, Hydraulic Pilot, Electro Hydraulic, Pneumatic Actuators
- Nominal flow - 14 to 42 gpm
- Maximum Pressure 5000 psi
- Special configurations to help you control fixed or variable displacement pumps
- Custom solutions in a single all-inclusive package
- Special adapted spool configurations according to your needs

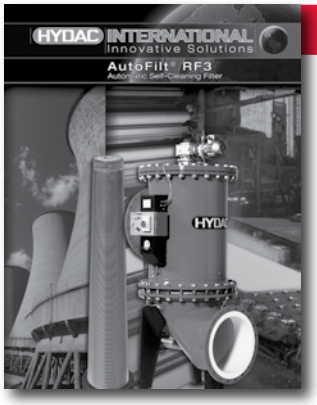

Process Filtration

The AutoFilt® RF3 is an automatic self-cleaning filtration system designed for continuous maintenance free filtration of water.

- 20 - 31,000 gpm flow rates
- 2" - 36" ANSI flange sizes
- 25 - 3000 micron ratings
- 25 to 150 psi operating pressures
- ASME Code certification
- Electric, Pneumatic, or
- Electro-pneumatic power source

Safe, Accurate, Reliable

PROTECTING YOUR INVESTMENTS

With over 40 years experience in different sensing technologies—for pressure, temperature, flow, distance, contamination, level and condition—HYDAC Electronics offers superior measurement and control solutions for your mobile, industrial and offshore applications. Based on these sensing and transmission technologies, we provide hand-held and portable electronic diagnostic tools used to predict the performance of your equipment. We have customized software that allows you to analyze and present this data professionally.

We also offer a full line of transmitters for hazardous environments that specifically serve the oil, gas, offshore and chemical markets.

Contact our product managers to discuss your OEM or MRO application to improve your process and/or equipment with HYDAC Electronic Instrumentation.

HYDAC INTERNATIONAL

INNOVATIVE FLUID POWER

1.877.GO.HYDAC | www.HYDACusa.com

1.888.99.HYDAC | www.HYDAC.ca

HYDAC INTERNATIONAL

INNOVATIVE FLUID POWER

Accumulators

Filters

Process Filtration

Filter Systems

Valves

Clamps

Accessories

Electronics

Cooling Systems

Compact Hydraulics

Mobile Directional Control Valves

Mobile Systems

HYDAC USA

www.HYDACusa.com

HYDAC TECHNOLOGY CORPORATION
HYCON Division
Electronic Division

2260 City Line Road
Bethlehem, PA 18017

+1.610.266.0100

HYDAC CORPORATION
Accumulator Division

2280 City Line Road
Bethlehem, PA 18017

+1.610.266.0100

HYDAC TECHNOLOGY CORPORATION
Hydraulic Division
Cooling Systems Group

445 Windy Point Drive
Glendale Heights, IL 60139

+1.630.545.0800

HYDAC TECHNOLOGY CORPORATION
Hydraulic Division
Compact Hydraulics Group

450 Windy Point Drive
Glendale Heights, IL 60139

+1.630.545.0800

HYDAC TECHNOLOGY CORPORATION
Mobile Hydraulic Division

1660 Enterprise Parkway • Suite E
Wooster, OH 44691

+1.610.266.0100 ext 1902

HYDAC TECHNOLOGY CORPORATION
Cooling System Division
Sales Office

9836-B Northcross Center Court
Huntersville, NC 28078

+1.704.895.5977

HYDAC CORPORATION
HYDAC TECHNOLOGY CORPORATION
Sales Office

1718 Fry Road • Suite 100
Houston, TX 77084

+1.281.579.8100

HYDAC CORPORATION
HYDAC TECHNOLOGY CORPORATION
Sales Office

12606 NE 95th Street
Building VC, Suite 100
Vancouver WA 98682

+1.360.882.0977

HYDAC Canada

www.HYDAC.ca

HYDAC CORPORATION

14 Federal Road
Welland, Ontario, Canada L3B 3P2

+1.905.714.9322

HYDAC CORPORATION
Sales Office

101 - 18207 114 AVE W
Edmonton, Alberta, Canada T5S 2P6

+1.780.484.4228

HYDAC CORPORATION
Sales Office

Montreal, Qu bec, Canada J2M 1K9

+1.877.539.3388

HYDAC Mexico

www.HYDACmex.com

HYDAC INTERNATIONAL SA DE CV

Av. Industria No. 102 Nave V
Los Reyes Ixtacala Tlalnepantla De Baz
Edo. de Mexico, Mexico 54090

+52.5.55565.8511

© Copyright 2010 **HYDAC TECHNOLOGY CORPORATION** • Catalog - Electronics **#02075078** / 05.10 ELC0909-1196