22.08.2014
-
04:17:08h

Datasheet - BNS 260-11ZG-R

Safety sensors / BNS 260

☒ Preferred typ

(Minor differences between the printed image and the original product may exist!)

- thermoplastic enclosure
- Small body
- Concealed mounting possible
- 26 mm x 36 mm x 13 mm
- Long life
- no mechanical wear
- Insensitive to transverse misalignment
- Insensitive to soiling
- Pre-wired cable

Ordering details

Product type description	BNS 260-11ZG-R
Article number	101184375
EAN code	4030661321738

Approval

Approval	BG USA/CAN

Classification

Standards	EN ISO 13849-1
B_{10d} Opener/Normally open contact (NC/NO)	25.000.000
- notice	at max. 20% contact load
Mission time	20 Years
notice	$MTTF_d = \frac{B_{10d}}{0{,}1 \times n_{op}}$ $n_{op} = \frac{d_{op} \times h_{op} \times 3600\ s/h}{t_{cycle}}$

Global Properties

Product name	BNS 260
Standards	IEC 60947-5-3, BG-GS-ET-14
Compliance with the Directives (Y/N) CE	Yes
Materials	
- Material of the housings	Plastic, glass-fibre reinforced thermoplastic
- Material of the cable mantle	PVC

Weight	60 g
Coding available (Y/N)	Yes
Monitoring function of downstream devices (Y/N)	No
Prerequisite evaluation unit	
Recommended safety-monitoring module	
Recommended actuator	BPS 260

Mechanical data

Design of electrical connection	Cable
Cable length	1 m
Conductors	4 x 0,25 mm²
AWG-Number	
mechanical installation conditions	quasi-flush
Active area	
Ensured switch distance ON S_{ao}	5 mm
Ensured switch distance OFF S_{ar}	15 mm
notice	**Axial misalignment** The safety sensor and the actuator tolerate a horizontal and vertical misalignment to each other. The possible misalignment depends on the distance of the active surfaces of the sensor and the actuator. The sensor is active in the tolerance range.
Type of actuation	Magnet
Direction of motion	head-on with regard to the active surface
restistance to shock	30 g / 11 ms
Resistance to vibration	10 … 55 Hz, Amplitude 1 mm
Door hinge	right

Ambient conditions

Ambient temperature	
- Min. environmental temperature	−25 °C
- Max. environmental temperature	+70 °C
Storage and transport temperature	
- Min. Storage and transport temperature	−25 °C
- Max. Storage and transport temperature	+70 °C
Protection class	IP67

Electrical data

Integrated Safety monitoring module available (Y/N)	No
Cross circuit/short circuit recognition possible (Y/N)	Yes
Voltage type	VDC
Switch frequency	max. 5 Hz
Switching voltage	max. 24 VDC
Switching current	max. 10 mA
Switching capacity	max. 240 mW

Outputs

Design of control output	
Number of shutters	1 piece
Number of openers	1 piece
Design of output signal switching device	

Electrical data - Safety outputs

Number of secure semi-conductor outputs	0 piece
Number of secure outputs with contact	2 piece

Electrical data - Diagnostic output

Number of semi-conductor outputs with signaling function	0 piece
Number of outputs with signaling function that already have a contact	0 piece

LED switching conditions display

LED switching conditions display (Y/N)	Yes
- The LED is illuminated when the guard is closed.	

ATEX

Explosion protection categories for gases	None
Explosion protected category for dusts	None

Dimensions

Dimensions of the sensor	
- Width of sensor	26 mm
- Height of sensor	36 mm
- Length of sensor	13 mm

notice

Contact symbols shown for the closed condition of the guard device.
The contact configuration for versions with or without LED is identical.
Contact S21-S22 und S11-S12 must be integrated in the safety circuit

Included in delivery

Actuators must be ordered separately.

Indication legend

Switch on/off diagram
The actuating graph also applies to the BPS 260-2, the actuator with 90° inverted actuation.

Diagram

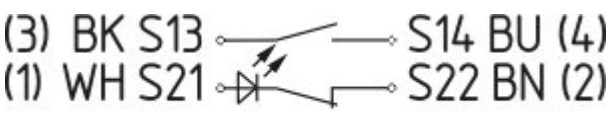

Note Diagram
positive break NC contact
active
no active

Normally-open contact
Normally-closed contact

Ordering code

BNS 260-(1)(2)Z(3)-(4)-(5)

(1)	
11	1 Normally open contact (NO) / 1 Opener (NC)
02	2 Opener (NC)
(2)	
without	without Diagnostic output
/01	1 Opener (NC)
(3)	
without	without LED switching conditions display
G	with LED switching conditions display
(4)	
without	Pre-wired cable
ST	with connector
(5)	
L	Door hinge on left-hand side
R	Door hinge on right-hand side

Documents

Operating instructions and Declaration of conformity (pt) 313 kB, 29.11.2011
Code: mrl_bns260_pt

Operating instructions and Declaration of conformity (cs) 323 kB, 04.06.2012
Code: mrl_bns260_cs

Operating instructions and Declaration of conformity (fr) 269 kB, 19.04.2013
Code: mrl_bns260_fr

Operating instructions and Declaration of conformity (de) 266 kB, 17.01.2013
Code: mrl_bns260_de

Operating instructions and Declaration of conformity (it) 264 kB, 18.03.2013
Code: mrl_bns260_it

Operating instructions and Declaration of conformity (br) 699 kB, 11.08.2011
Code: mrl_bns260_br

Operating instructions and Declaration of conformity (nl) 269 kB, 05.04.2013
Code: mrl_bns260_nl

Operating instructions and Declaration of conformity (pl) 323 kB, 02.04.2012
Code: mrl_bns260_pl

Operating instructions and Declaration of conformity (jp) 389 kB, 24.06.2014
Code: mrl_bns260_jp

Operating instructions and Declaration of conformity (en) 269 kB, 17.01.2013
Code: mrl_bns260_en

Operating instructions and Declaration of conformity (es) 320 kB, 13.09.2011
Code: mrl_bns260_es

Operating instructions and Declaration of conformity (da) 314 kB, 27.08.2012
Code: mrl_bns260_da

Images

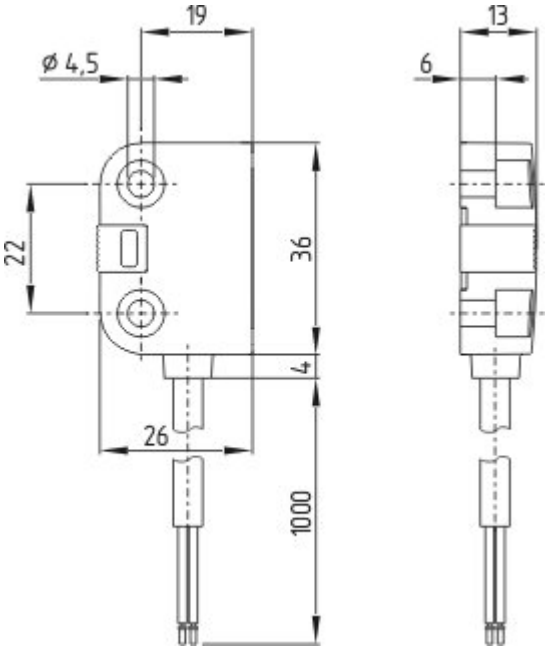

Dimensional drawing (basic component)

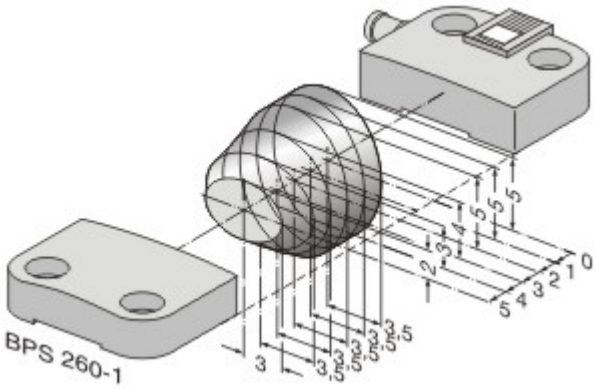

Characteristic curve

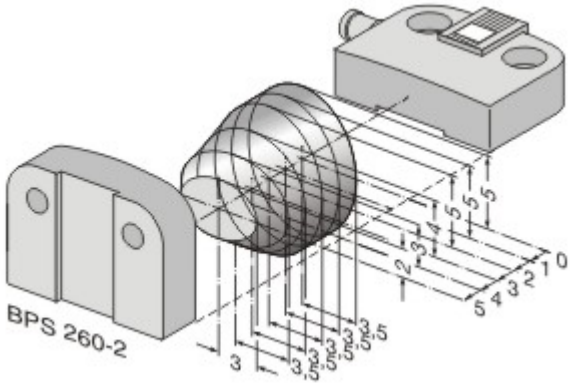

Characteristic curve

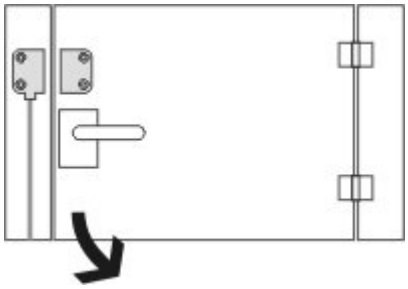

Clipart

System components

Actuator

101184395 - BPS 260-1

• Actuator and sensor on a mounting level

101184396 - BPS 260-2

• Actuator 90 ° attached to the sensor

Accessories

101184643 - SPACER BNS 260

to mount the magnetic safety sensor and actuator on ferromagnetic material

Image
Image et=sS