AES 1235 and AES 1236 to Monitor One Device

Safety Category (EN954-1): CC3

Stop Category (EN60204-1): 0

Features

- Control Category 3 to EN 954-1
- 2 enabling circuits
- Enable delay time can be modified
- Monitoring of mechanical position switches, safety switches, solenoid interlocks, coded magnet sensors or E-stops
- NO-NC contact combination can be connected
- Can be used as emergency-stop controller for Stop Category 0 to EN 60204-1
- Monitoring for short-circuit between connections with NO-NC contact combination
- ISD Integral System Diagnostics
- Short-circuit proof additional transistor output
- Feedback circuit to monitor external relays
- Start function
- Operational voltage 24 VDC
- Connection of input expansion modules possible
- Additional contact by means of output expansion modules

Dimensions 22.5 x 75 x 110 mm

ISD **The following faults are recognized by the safety controller and indicated by means of ISD**

- Failure of door contacts to open or close
- Short-circuits on or between the switch connections
- Interruption of the switch connections
- Failure of the unit's internal safety relay to pull-in or drop-out
- Faults on the input circuits or on the relay control of the guard door monitor

Note The ISD tables (Integral System Diagnostics) for analysis of the fault indications and their causes are shown on page 192.

Technical Specifications may be found on page 179

Model Designation **AES 1235-24VDC** (For unit with optional start-up test specify **AES 1236-24VDC**)

Function Table

	Additional semi-conductor output Y	Function of output Y	Switching Condition
AES 1235	Y1	Enable	Enable circuit closed

Approvals **BG UL CSA**

AES 1235 and AES 1236 to Monitor One Device

FaultFinder™

Typical Applications

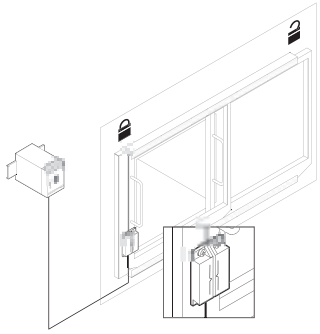

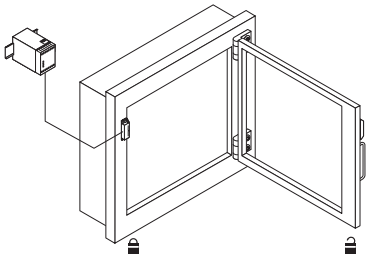

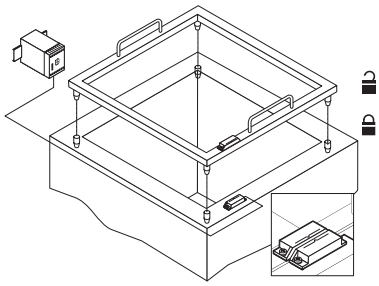

Typical Wiring Diagram
(See page 21 for symbol key)

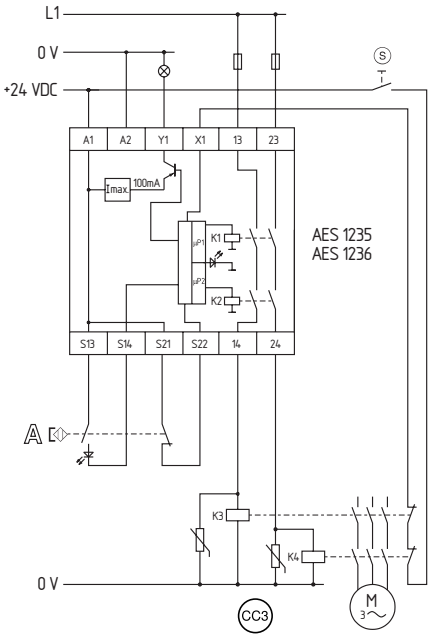

Application Notes

- AES achieve Control Category 3 to EN 954-1.
- Monitoring a sliding, hinged or removable guard device, each using a coded magnet sensor A.
- The feedback circuit monitors positions of the contactors K3 and K4.
- If only one external relay or contactor is used to switch the load, the system can be classified in Control Category 3 to EN 954-1 if exclusion of the fault “Failure of the external contactor” can be substantiated and is documented, e.g. by using a reliable de-rated contactor. A second contactor leads to an increase in the level of security by redundant switching of the load.
- The wiring diagram is with guard devices closed and shows the de-energized condition.

Circuit Options

- **Start Pushbutton Ⓢ**
  A start pushbutton (NO) can optionally be connected to the inputs in the feedback circuit. With the guard device closed, the enabling circuits are then not closed until the start pushbutton has been operated.
- **Feedback Circuit**
  A feedback circuit is shown connected in the wiring diagram. If no feedback circuit is used, input X1 must be connected to 24 VDC supply or a jumper between output Y1 and input X1.
- **Extension of Enable Delay Time**
  The enable delay time can be increased from 0.1 s to 1 s by changing the position of a jumper link connection under the cover of the unit.