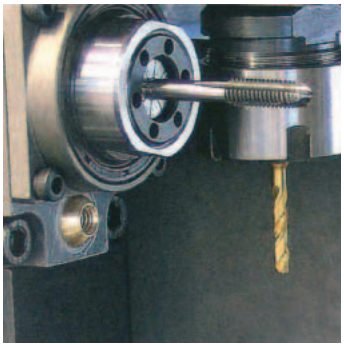

aerospace
climate control
electromechanical
filtration
fluid & gas handling
hydraulics
pneumatics
process control
sealing & shielding

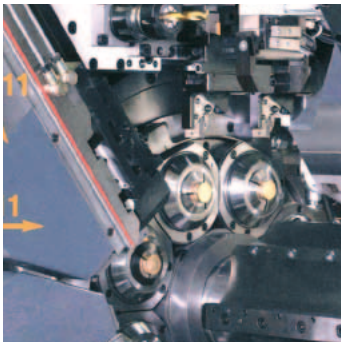

NK Series

Frameless Servo Motor

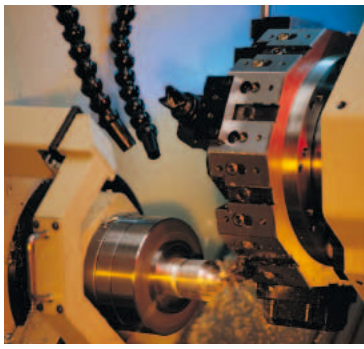

Parker

ENGINEERING YOUR SUCCESS.

WARNING — USER RESPONSIBILITY

FAILURE OR IMPROPER SELECTION OR IMPROPER USE OF THE PRODUCTS DESCRIBED HEREIN OR RELATED ITEMS CAN CAUSE DEATH, PERSONAL INJURY AND PROPERTY DAMAGE.

- This document and other information from Parker-Hannifin Corporation, its subsidiaries and authorized distributors provide product or system options for further investigation by users having technical expertise.
- The user, through its own analysis and testing, is solely responsible for making the final selection of the system and components and assuring that all performance, endurance, maintenance, safety and warning requirements of the application are met. The user must analyze all aspects of the application, follow applicable industry standards, and follow the information concerning the product in the current product catalog and in any other materials provided from Parker or its subsidiaries or authorized distributors.
- To the extent that Parker or its subsidiaries or authorized distributors provide component or system options based upon data or specifications provided by the user, the user is responsible for determining that such data and specifications are suitable and sufficient for all applications and reasonably foreseeable uses of the components or systems.

Overview 5

Technical Data 6

Associated Drives 7

Dimensions 8

Order Code 9

Parker Hannifin

The global leader in motion and control technologies

A world class player on a local stage

Global Product Design

Parker Hannifin has more than 40 years experience in the design and manufacturing of drives, controls, motors and mechanical products. With dedicated global product development teams, Parker draws on industry-leading technological leadership and experience from engineering teams in Europe, North America and Asia.

Local Application Expertise

Parker has local engineering resources committed to adapting and applying our current products and technologies to best fit our customers' needs.

Manufacturing to Meet Our Customers' Needs

Parker is committed to meeting the increasing service demands that our customers require to succeed in the global industrial market. Parker's manufacturing teams seek continuous improvement through the implementation of lean manufacturing methods throughout the process. We measure ourselves on meeting our customers' expectations of quality and delivery, not just our own. In order to meet these expectations, Parker operates and continues to invest in our manufacturing facilities in Europe, North America and Asia.

Electromechanical Worldwide Manufacturing Locations

Europe
Littlehampton, United Kingdom
Dijon, France
Offenburg, Germany
Filderstadt, Germany
Milan, Italy

Asia
Wuxi, China
Chennai, India

North America
Rohnert Park, California
Irwin, Pennsylvania
Charlotte, North Carolina
New Ulm, Minnesota

Offenburg, Germany

Local Manufacturing and Support in Europe

Parker provides sales assistance and local technical support through a network of dedicated sales teams and authorized technical distributors throughout Europe.

For contact information, please refer to the Sales Offices on the back cover of this document or visit www.parker.com

Milan, Italy

Littlehampton, UK

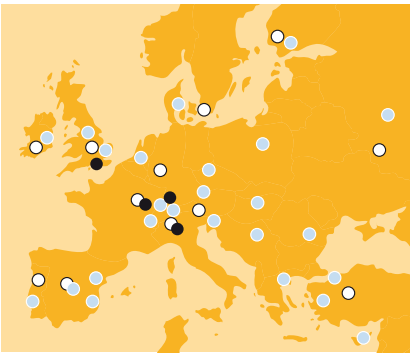

Electromechanical Manufacturing
Parker Sales Offices
Distributors

Dijon, France

www.comoso.com

Frameless Servo Motor - NK Series

Overview

Description

Servo motor kit is an innovative and comprehensive approach enabling the complete integration of the motor in a simplified mechanical system.
This approach ensures that the size constraints of the machine are utilized to maximum effect.
This delivers a more accurate, reliable and robust solution than traditional construction methods.
A complete range of products is available to meet the design needs of many different mechanical systems in a host of different applications.
Other more bespoke adaptations can be developed upon request.

Advantages

- **Compact footprint and reduced weight of the mechanical systems**
- **Reduced cost**
- **Direct Drive: accurate and robust mechanics**
- **Complete and optimized solution including sensor, cooling system and drive**
- **Integration assistance**

Applications

- **Tooling Machines**
- **Medical Science**

Technical Characteristics - Overview

Frameless servomotors	
Low speed torque	0.4...42 Nm
Max. speed	8000 min^{-1}
Max. constant power	0.25...7.7 kW
Inertia	13...9200 $kgmm^2$
Weight	0.422...17.445 kg
Frameless servomotors with water cooling	
Low speed torque	3.4...72 Nm
Max. speed	15 000 min^{-1}
Max. constant power	4.7...30 kW
Inertia	79...9200 $kgmm^2$
Weight	0.8885...17.44 kg

Technical Data

Stall Torque M_0[1] [Nm]	Rated Torque M_N [Nm]	Max. Speed N_{may} [min^{-1}]	Low Speed Current I_0 [A_{RMS}]	Nominal Current I_N [A_{RMS}]	Moment of Inertia J [$kgmm^2$]	Product Code							
230 VAC power supply - single or three-phased													
0.45	0.33	6000	0.99	0.78	13	NK110E	■	P	R	1	■	0	0
1.00	0.80	4000	1.34	1.11	38	NK210E	■	T	R	1	■	0	0
1.00	0.61	6000	1.99	1.32	38	NK210E	■	P	R	1	■	0	0
2.00	1.80	2300	1.39	1.27	79	NK310E	■	P	R	1	■	0	0
2.00	1.65	4000	2.43	2.06	79	NK310E	■	K	R	1	■	0	0
4.00	3.53	2300	2.71	2.41	290	NK420E	■	P	R	1	■	0	0
4.00	3.14	4000	4.69	3.74	290	NK420E	■	J	R	1	■	0	0
5.50	4.68	3200	5.24	4.53	426	NK430E	■	J	R	1	■	0	0
5.50	4.29	4000	6.64	5.28	426	NK430E	■	F	R	1	■	0	0
8.00	7.42	2200	5.31	4.99	980	NK620E	■	R	R	1	■	0	0
8.00	6.08	4000	9.89	7.82	980	NK620E	■	J	R	1	■	0	0
12.00	10.73	1450	5.25	4.75	1470	NK630E	■	R	R	1	■	0	0
12.00	9.21	2800	9.86	7.80	1470	NK630E	■	K	R	1	■	0	0
12.00	7.60	4000	13.90	9.31	1470	NK630E	■	G	R	1	■	0	0
16.00	13.24	3600	17.50	14.82	3200	NK820E	■	L	R	1	■	0	0
28.00	22.88	2200	18.90	15.70	6200	NK840E	■	J	R	1	■	0	0
41.00	32.80	1900	27.00	22.00	9200	NK860E	■	F	R	1	■	0	0
41.00	27.47	2600	33.00	22.72	9200	NK860E	■	D	R	1	■	0	0
400 VAC power supply - three-phased													
1.00	0.61	6000	1.34	0.89	38	NK210E	■	T	R	1	■	0	0
2.00	1.65	4000	1.39	1.18	79	NK310E	■	P	R	1	■	0	0
4.00	3.60	2000	1.36	1.23	290	NK420E	■	V	R	1	■	0	0
4.00	3.14	4000	2.71	2.16	290	NK420E	■	P	R	1	■	0	0
5.50	5.38	1000	1.41	1.38	426	NK430E	■	V	R	1	■	0	0
5.50	4.77	3000	2.82	2.48	426	NK430E	■	P	R	1	■	0	0
5.50	4.29	4000	3.78	3.01	426	NK430E	■	L	R	1	■	0	0
8.00	7.52	2000	2.83	2.69	980	NK620E	■	V	R	1	■	0	0
8.00	6.17	3900	5.31	4.25	980	NK620E	■	R	R	1	■	0	0
8.00	4.10	4500	9.89	5.56	980	NK620E	■	J	R	1	■	0	0
12.00	10.83	1350	2.62	2.40	1470	NK630E	■	V	R	1	■	0	0
12.00	9.34	2700	5.25	4.20	1470	NK630E	■	R	R	1	■	0	0
12.00	7.60	4000	7.92	5.30	1470	NK630E	■	N	R	1	■	0	0
16.00	14.72	1900	5.16	4.79	3200	NK820E	■	K	R	1	■	0	0
16.00	12.94	3900	11.00	9.07	3200	NK820E	■	R	R	1	■	0	0
28.00	23.17	2100	10.10	8.47	6200	NK840E	■	Q	R	1	■	0	0
28.00	18.56	3500	16.80	11.51	6200	NK840E	■	K	R	1	■	0	0
41.00	27.47	2600	18.50	12.78	9200	NK860E	■	J	R	1	■	0	0

[1] Mounting on aluminium flange: 280 x 280 x 8 mm (NK1-2), 400 x 400 x 12 mm (NK3-8)
(For frameless servomotors with water cooling, please contact us)

Associated Drives

Standards Motors Ref.	Max. Speed [min⁻¹]			Drives sizes		
	638	Compax3	SLVD-N	Compax3	SLVD-N	638
230 VAC power supply - single or three-phased						
NK110E..P..	6000	6000	5400	C3S025V2..	SLVD1N	638A-01-3-F…
NK210E..T..	4000	3420	3420	C3S025V2..	SLVD2N	638A-02-3-F..
NK210E..P..	6000	5530	5400	C3S025V2..	SLVD2N	638A-02-3-F..
NK310E..P..	2300	1930	1930	C3S025V2..	SLVD2N	638A-02-3-F..
NK310E..K..	4000	3600	3600	C3S025V2..	SLVD2N	638A-04-3-F..
NK420E..P..	2300	1990	1990	C3S063V2..	SLVD5N	638A-04-3-F..
NK420E..J..	4000	3620	3620	C3S063V2..	SLVD5N	638A-04-3-F..
NK430E..J..	3200	2860	2860	C3S063V2..	SLVD7N	638A-06-3-F..
NK430E..F..	4000	3700	3700	C3S100V2..	SLVD7N	-
NK620E..R..	2200	1880	1880	C3S063V2..	SLVD7N	638A-06-3-F..
NK620E..J..	4000	3670	3670	C3S100V2..	SLVD10N	-
NK630E..R..	1450	1320	1320	C3S063V2..	SLVD7N	638A-06-3-F..
NK630E..K..	2800	2600	2600	C3S100V2..	SLVD10N	-
NK630E..G..	4000	3750	3750	C3S150V2..	SLVD15N	-
NK820E..L..	3600	3310	-	-	-	-
NK840E..J..	2200	2070	-	-	-	-
NK860E..F..	1900	1900	-	-	-	-
NK860E..D..	2600	2510	-	-	-	-
400 VAC power supply - three-phased						
NK210E..T..	6000	6000	-	C3S015V4..	-	
NK310E..P..	4000	3570	-	C3S015V4..	-	
NK420E..V..	2000	1710	-	C3S015V4..	-	
NK420E..P..	4000	3630	-	C3S038V4..	-	
NK430E..V..	1000	1000	-	C3S015V4..	-	
NK430E..P..	3000	2670	-	C3S038V4..	-	
NK430E..L..	4000	3650	-	C3S038V4..	-	
NK620E..V..	2000	1730	-	C3S038V4..	-	
NK620E..R..	3900	3440	-	C3S075V4..	-	
NK620E..J..	4500	4500	-	C3S150V4..	-	
NK630E..V..	1350	1150	-	C3S038V4..	-	
NK630E..R..	2700	2390	-	C3S075V4..	-	
NK630E..N..	4000	3710	-	C3S150V4..	-	
NK820E..K..	1900	1620	-	C3S075V4..	-	
NK820E..R..	3900	3600	-	C3S150V4..	-	
NK840E..Q..	2100	1910	-	C3S150V4..	-	
NK840E..K..	3500	3270	-	C3S300V4..	-	
NK860E..J..	2600	2440	-	C3S300V4..	-	

Dimensions

Motor	A [mm]	B [mm]	L [mm]
NK110	42	9	65
NK2■■	56	12	68

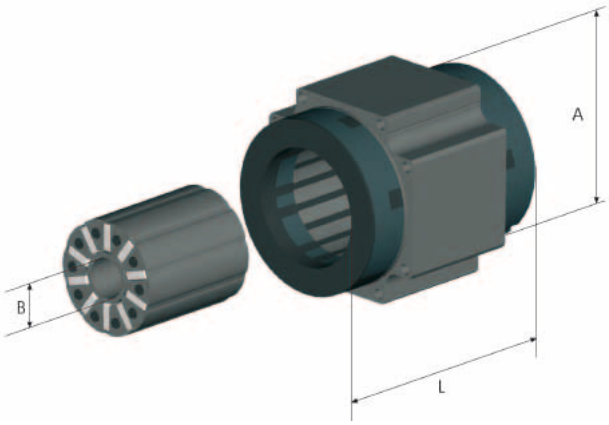

Motor	A [mm]	B [mm]	L [mm]
NK310	62	14	75
NK420	80	20	92
NK430			117
NK620	111	26	104
NK630			133
NK820	143	40	110
NK840			170
NK860			230
NK310W	82	14	85
NK420W	100	20	102
NK430W			127
NK620W	131	26	114
NK630W			143
NK820W	143	40	120
NK840W			180
NK860W			240

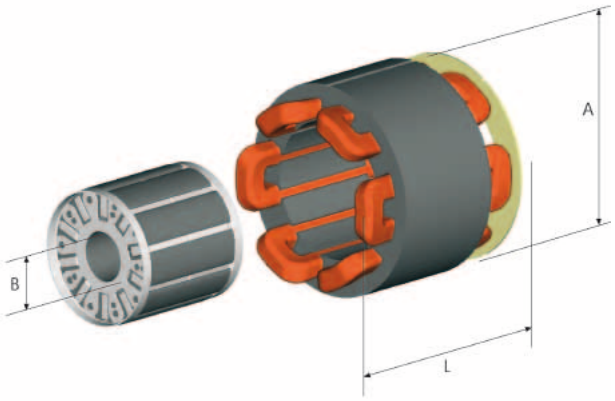

Option

Several types of sensor are available for use with servo motor kits depending upon the needs of the application, such as environment, resolution and accuracy: resolver, high resolution sensor, optical encoder...

Order Code

NK Series

	1	2	3	4	5	6
Order example	**NK110**	**E**	**A**	**KR1**	**0**	**00**

1	**Motor type**	
	NK110 **NK210** **NK310** **...**	see table "Technical Data"
2	**Cooling**	
	E	Natural cooling
	W	Water cooling
3	**Feedback sensors/Motors**	
	A	2 pole resolver
	K	Without sensor (standard)
	Q	Absolute multi-turn HIPERFACE 16ppr SEL37 (on request)
	R	Absolute single-turn HIPERFACE encoder 128 ppt SKS36/NK2-8
	S	Absolute multi-turn HIPERFACE encoder 128 ppt SKM36/NK2-8
	T	Absolute single-turn HIPERFACE encoder 1024 ppt SRS50/NK3-8 (on request)
	U	Absolute multi-turn HIPERFACE encoder 1024 ppt SRM50/NK3-8 (on request)
	V	Absolute single-turn EnDat encoder ECN 1113/NK2-8
	W	Absolute multi-turn EnDat encoder EQN 1125/NK2-8
	Y	Without feedback sensor in combination with AC650S drive

4	**Motor type**	
	PR1 **TR1** **JR1** **...**	see table "Technical Data"
5	**Thermal protection + Brake/Motors**	
	0	Without (standard)
	1	PTC/NK3-8
	2	Thermo switch/NK3-8
6	**Mechanical characteristics/Motors**	
	00	Standard
	XX	Customization (on request)

Parker's Motion & Control Technologies

At Parker, we're guided by a relentless drive to help our customers become more productive and achieve higher levels of profitability by engineering the best systems for their requirements. It means looking at customer applications from many angles to find new ways to create value. Whatever the motion and control technology need, Parker has the experience, breadth of product and global reach to consistently deliver. No company knows more about motion and control technology than Parker. For further info call 00800 27 27 5374.

AEROSPACE

Key Markets
- Aircraft engines
- Business & general aviation
- Commercial transports
- Land-based weapons systems
- Military aircraft
- Missiles & launch vehicles
- Regional transports
- Unmanned aerial vehicles

Key Products
- Flight control systems & components
- Fluid conveyance systems
- Fluid metering delivery & atomization devices
- Fuel systems & components
- Hydraulic systems & components
- Inert nitrogen generating systems
- Pneumatic systems & components
- Wheels & brakes

CLIMATE CONTROL

Key Markets
- Agriculture
- Air conditioning
- Food, beverage & dairy
- Life sciences & medical
- Precision cooling
- Processing
- Transportation

Key Products
- CO^2 controls
- Electronic controllers
- Filter driers
- Hand shut-off valves
- Hose & fittings
- Pressure regulating valves
- Refrigerant distributors
- Safety relief valves
- Solenoid valves
- Thermostatic expansion valves

ELECTROMECHANICAL

Key Markets
- Aerospace
- Factory automation
- Food & beverage
- Life science & medical
- Machine tools
- Packaging machinery
- Paper machinery
- Plastics machinery & converting
- Primary metals
- Semiconductor & electronics
- Textile
- Wire & cable

Key Products
- AC/DC drives & systems
- Electric actuators
- Controllers
- Gantry robots
- Gearheads
- Human machine interfaces
- Industrial PCs
- Inverters
- Linear motors, slides and stages
- Precision stages
- Stepper motors
- Servo motors, drives & controls
- Structural extrusions

FILTRATION

Key Markets
- Food & beverage
- Industrial machinery
- Life sciences
- Marine
- Mobile equipment
- Oil & gas
- Power generation
- Process
- Transportation

Key Products
- Analytical gas generators
- Compressed air & gas filters
- Condition monitoring
- Engine air, fuel & oil filtration & systems
- Hydraulic, lubrication & coolant filters
- Process, chemical, water & microfiltration filters
- Nitrogen, hydrogen & zero air generators

FLUID & GAS HANDLING

Key Markets
- Aerospace
- Agriculture
- Bulk chemical handling
- Construction machinery
- Food & beverage
- Fuel & gas delivery
- Industrial machinery
- Mobile
- Oil & gas
- Transportation
- Welding

Key Products
- Brass fittings & valves
- Diagnostic equipment
- Fluid conveyance systems
- Industrial hose
- PTFE & PFA hose, tubing & plastic fittings
- Rubber & thermoplastic hose & couplings
- Tube fittings & adapters
- Quick disconnects

HYDRAULICS

Key Markets
- Aerospace
- Aerial lift
- Agriculture
- Construction machinery
- Forestry
- Industrial machinery
- Mining
- Oil & gas
- Power generation & energy
- Truck hydraulics

Key Products
- Diagnostic equipment
- Hydraulic cylinders & accumulators
- Hydraulic motors & pumps
- Hydraulic systems
- Hydraulic valves & controls
- Power take-offs
- Rubber & thermoplastic hose & couplings
- Tube fittings & adapters
- Quick disconnects

PNEUMATICS

Key Markets
- Aerospace
- Conveyor & material handling
- Factory automation
- Food & beverage
- Life science & medical
- Machine tools
- Packaging machinery
- Transportation & automotive

Key Products
- Air preparation
- Compact cylinders
- Field bus valve systems
- Grippers
- Guided cylinders
- Manifolds
- Miniature fluidics
- Pneumatic accessories
- Pneumatic actuators & grippers
- Pneumatic valves and controls
- Rodless cylinders
- Rotary actuators
- Tie rod cylinders
- Vacuum generators, cups & sensors

PROCESS CONTROL

Key Markets
- Chemical & refining
- Food, beverage & dairy
- Medical & dental
- Microelectronics
- Oil & gas
- Power generation

Key Products
- Analytical sample conditioning products & systems
- Fluoropolymer chemical delivery fittings, valves & pumps
- High purity gas delivery fittings, valves & regulators
- Instrumentation fittings, valves & regulators
- Medium pressure fittings & valves
- Process control manifolds

SEALING & SHIELDING

Key Markets
- Aerospace
- Chemical processing
- Consumer
- Energy, oil & gas
- Fluid power
- General industrial
- Information technology
- Life sciences
- Military
- Semiconductor
- Telecommunications
- Transportation

Key Products
- Dynamic seals
- Elastomeric o-rings
- EMI shielding
- Extruded & precision-cut, fabricated elastomeric seals
- Homogeneous & inserted elastomeric shapes
- High temperature metal seals
- Metal & plastic retained composite seals
- Thermal management

www.comoso.com

Parker Worldwide

Europe, Middle East, Africa

AE – United Arab Emirates, Dubai
Tel: +971 4 8127100
parker.me@parker.com

AT – Austria, Wiener Neustadt
Tel: +43 (0)2622 23501-0
parker.austria@parker.com

AT – Eastern Europe,
Wiener Neustadt
Tel: +43 (0)2622 23501 900
parker.easteurope@parker.com

AZ – Azerbaijan, Baku
Tel: +994 50 2233 458
parker.azerbaijan@parker.com

BE/LU – Belgium, Nivelles
Tel: +32 (0)67 280 900
parker.belgium@parker.com

BY – Belarus, Minsk
Tel: +375 17 209 9399
parker.belarus@parker.com

CH – Switzerland, Etoy
Tel: +41 (0)21 821 87 00
parker.switzerland@parker.com

CZ – Czech Republic, Klecany
Tel: +420 284 083 111
parker.czechrepublic@parker.com

DE – Germany, Kaarst
Tel: +49 (0)2131 4016 0
parker.germany@parker.com

DK – Denmark, Ballerup
Tel: +45 43 56 04 00
parker.denmark@parker.com

ES – Spain, Madrid
Tel: +34 902 330 001
parker.spain@parker.com

FI – Finland, Vantaa
Tel: +358 (0)20 753 2500
parker.finland@parker.com

FR – France, Contamine s/Arve
Tel: +33 (0)4 50 25 80 25
parker.france@parker.com

GR – Greece, Athens
Tel: +30 210 933 6450
parker.greece@parker.com

HU – Hungary, Budaörs
Tel: +36 23 885 470
parker.hungary@parker.com

IE – Ireland, Dublin
Tel: +353 (0)1 466 6370
parker.ireland@parker.com

IT – Italy, Corsico (MI)
Tel: +39 02 45 19 21
parker.italy@parker.com

KZ – Kazakhstan, Almaty
Tel: +7 7273 561 000
parker.easteurope@parker.com

NL – The Netherlands, Oldenzaal
Tel: +31 (0)541 585 000
parker.nl@parker.com

NO – Norway, Asker
Tel: +47 66 75 34 00
parker.norway@parker.com

PL – Poland, Warsaw
Tel: +48 (0)22 573 24 00
parker.poland@parker.com

PT – Portugal, Leca da Palmeira
Tel: +351 22 999 7360
parker.portugal@parker.com

RO – Romania, Bucharest
Tel: +40 21 252 1382
parker.romania@parker.com

RU – Russia, Moscow
Tel: +7 495 645-2156
parker.russia@parker.com

SE – Sweden, Spånga
Tel: +46 (0)8 59 79 50 00
parker.sweden@parker.com

SK – Slovakia, Banská Bystrica
Tel: +421 484 162 252
parker.slovakia@parker.com

SL – Slovenia, Novo Mesto
Tel: +386 7 337 6650
parker.slovenia@parker.com

TR – Turkey, Istanbul
Tel: +90 216 4997081
parker.turkey@parker.com

UA – Ukraine, Kiev
Tel +380 44 494 2731
parker.ukraine@parker.com

UK – United Kingdom, Warwick
Tel: +44 (0)1926 317 878
parker.uk@parker.com

ZA – South Africa, Kempton Park
Tel: +27 (0)11 961 0700
parker.southafrica@parker.com

North America

CA – Canada, Milton, Ontario
Tel: +1 905 693 3000

US – USA, Cleveland
Tel: +1 216 896 3000

Asia Pacific

AU – Australia, Castle Hill
Tel: +61 (0)2-9634 7777

CN – China, Shanghai
Tel: +86 21 2899 5000

HK – Hong Kong
Tel: +852 2428 8008

IN – India, Mumbai
Tel: +91 22 6513 7081-85

JP – Japan, Tokyo
Tel: +81 (0)3 6408 3901

KR – South Korea, Seoul
Tel: +82 2 559 0400

MY – Malaysia, Shah Alam
Tel: +60 3 7849 0800

NZ – New Zealand, Mt Wellington
Tel: +64 9 574 1744

SG – Singapore
Tel: +65 6887 6300

TH – Thailand, Bangkok
Tel: +662 186 7000-99

TW – Taiwan, Taipei
Tel: +886 2 2298 8987

South America

AR – Argentina, Buenos Aires
Tel: +54 3327 44 4129

BR – Brazil, Sao Jose dos Campos
Tel: +55 800 727 5374

CL – Chile, Santiago
Tel: +56 2 623 1216

MX – Mexico, Apodaca
Tel: +52 81 8156 6000

We reserve the right to make technical changes. The data correspond to the technical state at the time of printing.
© 2012 Parker Hannifin Corporation.
All rights reserved.

192-063005N3 November 2012

EMEA Product Information Centre
Free phone: 00 800 27 27 5374
(from AT, BE, CH, CZ, DE, DK, EE, ES, FI, FR, IE, IL, IS, IT, LU, MT, NL, NO, PL, PT, RU, SE, SK, UK, ZA)
US Product Information Centre
Toll-free number: 1-800-27 27 537
www.parker.com

Your local authorized Parker distributor

www.comoso.com