Close Nippled Combinations – 14 Miniature Series

- See individual component pages for details.

Two-Unit Combo

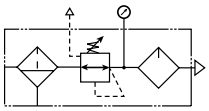

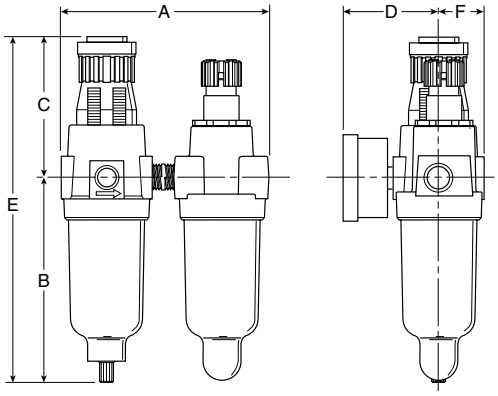

Series	Port	Model Numbers
14G	1/8"	**14G01B13F0G***
	1/4"	**14G11B13F0G***

For other models, refer to ordering information on next page.

A	B	C	D	E	F
3.75	3.79	2.42	2.04	6.21	0.79
(95)	(96)	(61)	(52)	(158)	(20)

Inches (mm)
Note: All dimensions nominal.

Three-Unit Combo

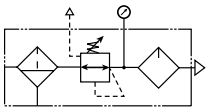

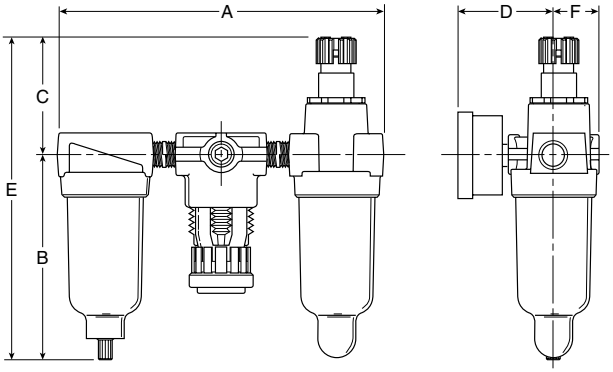

Series	Port	Model Numbers
14A	1/8"	**14A01B13F0G***
	1/4"	**14A11B13F0G***

For other models, refer to ordering information on next page.

A	B	C	D	E	F
5.77	3.82	2.16	2.04	5.98	0.79
(147)	(97)	(55)	(52)	(152)	(20)

Inches (mm)
Note: All dimensions nominal.

- Regulator can be mounted with knob in up or down position.

www.comoso.com

Close Nippled Combinations – 14 Miniature Series

Ordering Information

14A	1	1	B	13	F	0	G	*

Series
- **14A. 3-Unit**
- **14G. 2-Unit**

Port Size
- **0. 1/8"**
- **1. 1/4"**

Filter Bowl Options

Poly Bowl
- **1. Twist Drain**
- 5. Automatic Pulse Drain

Metal Bowl
- 3. Twist Drain
- 7. Automatic Pulse Drain

Filter Element
- A. 40 Micron
- **B. 5 Micron**

Regulator Pressure

Without Gauge
- 10. 30 PSIG
- 11. 60 PSIG
- 12. 15 PSIG
- **13. 125 PSIG**

With Gauge
- 15. 30 PSIG
- 16. 60 PSIG
- 17. 15 PSIG
- 18. 125 PSIG

Relief
- **F. Relieving**
- G. Non-Relieving

Lubricator Bowl Options

Poly Bowl
- **0. No Drain**
- 1. Twist Drain

Metal Bowl
- 3. Twist Drain

Lubricator Body Options
- **G. No Fill Plug**

Engineering Change Designator

Will be entered at factory.

NOTE: BOLD OPTIONS ARE STANDARD.

CAUTION:

REGULATOR PRESSURE ADJUSTMENT – The working range of knob adjustment is designed to permit outlet pressures within their full range. Pressure adjustment beyond this range is also possible because the knob is not a limiting device. This is a common characteristic of most industrial regulators, and limiting devices may be obtained only by special design.

Mounting Bracket Kits

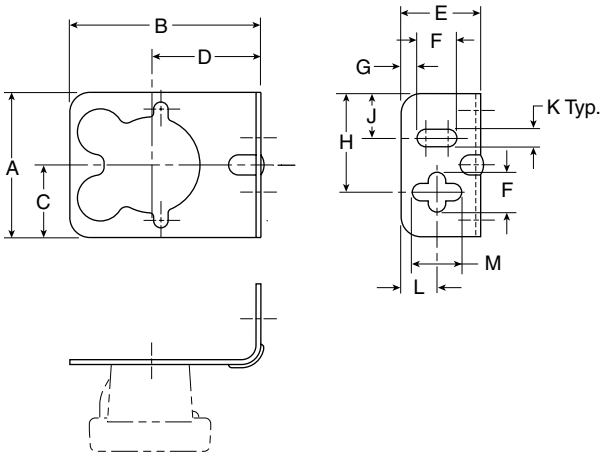

PS417BP
(Includes Panel Mount Nut)

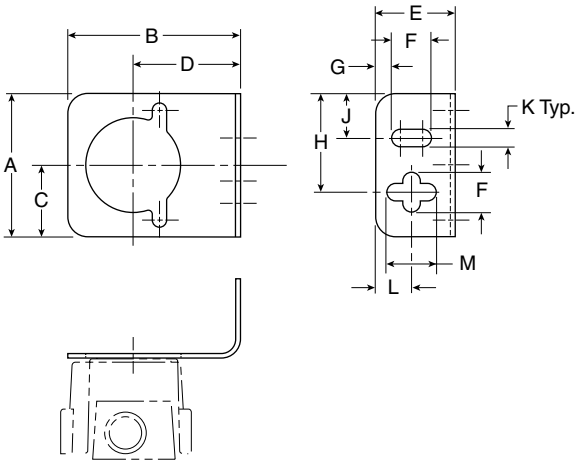

PS419

Dimensions

	A	B	C	D	E	F	G	H	J	K	L	M	Kit
inches	1.80	2.37	0.90	1.35	1.00	0.50	0.20	1.24	0.56	0.22	0.45	0.62	**PS417BP**
mm	46	60	23	34	25	13	5	31	14	6	11	16	(14F, 10F, 14R, 14E)
inches	1.80	2.17	0.90	1.35	1.00	0.50	0.20	1.24	0.56	0.22	0.45	0.62	**PS419**
mm	46	55	23	34	25	13	5	31	14	6	11	16	(04L)

www.comoso.com