Specifications for TM25 Series

TM25 Features Include:

- Bearing drain is standard and allows operation in series circuits
- Journal bearings for long life and good over-hung load capability
- Buna-N Seals are standards for petroleum and glycol based fluids "Viton®E" seals are optional.
- Pressure balanced plates for greater efficiency.

Description ..... Gear Motors
Flow Range ..... To 134 GPM Per Section (507.2 LTR.)
Displacements ..... To 15.50 C.I.R. Per Section (254.00 CC's/REV.)
Maximum Pressure to ..... 2500 PSI (172 BAR)
Maximum Speed to ..... 2000 RPM
Rotation ..... Bi-Directional
Bearings ..... Journal
Construction ..... Aluminum

Performance Data Per Section

MOTOR MODELS	DISPLACEMENT/REVOLUTION(THEORETICAL)					TORQUE PER 1000 PSID*				POWER AT MAX. RPM/MAX.PSID*		MAXIMUM LIMITS				
						START		RUN				RELIEF SETTING		CONTINUOUS PRESSURE		SPEED
	US GALLONS	CUBIC INCHES	LITERS	CUBIC CM'S	IMPERIAL GALLONS	LB.IN.	NM	LB.IN.	NM	H.P.	KW	PSI	BAR	PSI	BAR	RPM
TM25550	.0479	11.06	.181	181.24	.040	1400	1898	1600	2169	122	91.0	2500	172	1700	117	2000
TM25660	.0581	13.42	.220	219.91	.048	1760	2386	1960	2657	146	109.0	2500	172	1700	117	2000
TM25770	.0671	15.50	.254	254.00	.056	1820	2467	2200	1629	168	125.3	2500	172	1700	117	2000

All data based on SAE 10W oil at 135°F.*Average values from performance curves.

CAUTION: If return line pressure exceeds 150 PSIG, the external bearing drain must be used.

MOUNTING DIMENSIONS					
	For 'C' 2-Bolt & 'C' 4-Bolt Flg.			SAE 4-Bolt Conn. Port	
PUMP SIZE	A	B	C	Inlet	Outlet
TM25550-550	128.5 (5.06)	376.1 (14.81)	471.4 (18.56)	2"	2"
TM25660-550	137.9 (5.43)	386.8 (15.23)	482.0 (18.98)	2"	2"
TM25660-660	137.9 (5.43)	393.1 (15.48)	488.4 (19.23)	2"	2"
TM25770-550	147.5 (5.81)	396.2 (15.60)	491.4 (19.35)	2"	2"
TM25770-660	147.5 (5.81)	402.5 (15.85)	497.8 (19.60)	2"	2"
TM25770-770	147.5 (5.81)	408.9 (16.10)	504.1 (19.85)	2"	2"

SAE 4-Bolt Connector Ports					
Size	D	E	F	G	H
2"	21.3 (.84)	42.8 (1.688)	38.8 (1.53)	77.7 (3.062)	1/2-13NC

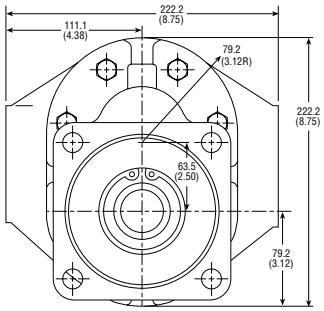

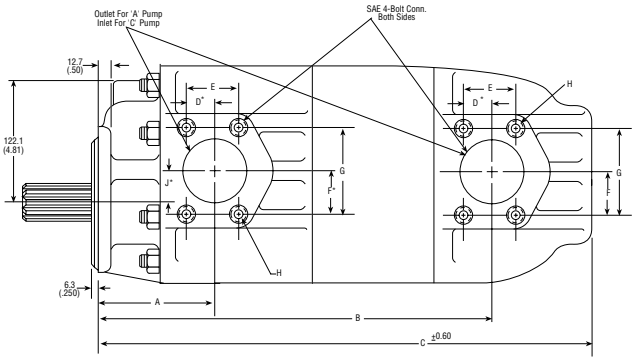

Inch equivalents for millimeter dimensions are shown in (**).

Parker Hannifin Corporation
Gear Pump Division
Youngstown, Ohio USA

www.comoso.com