Splitview / Spare Parts

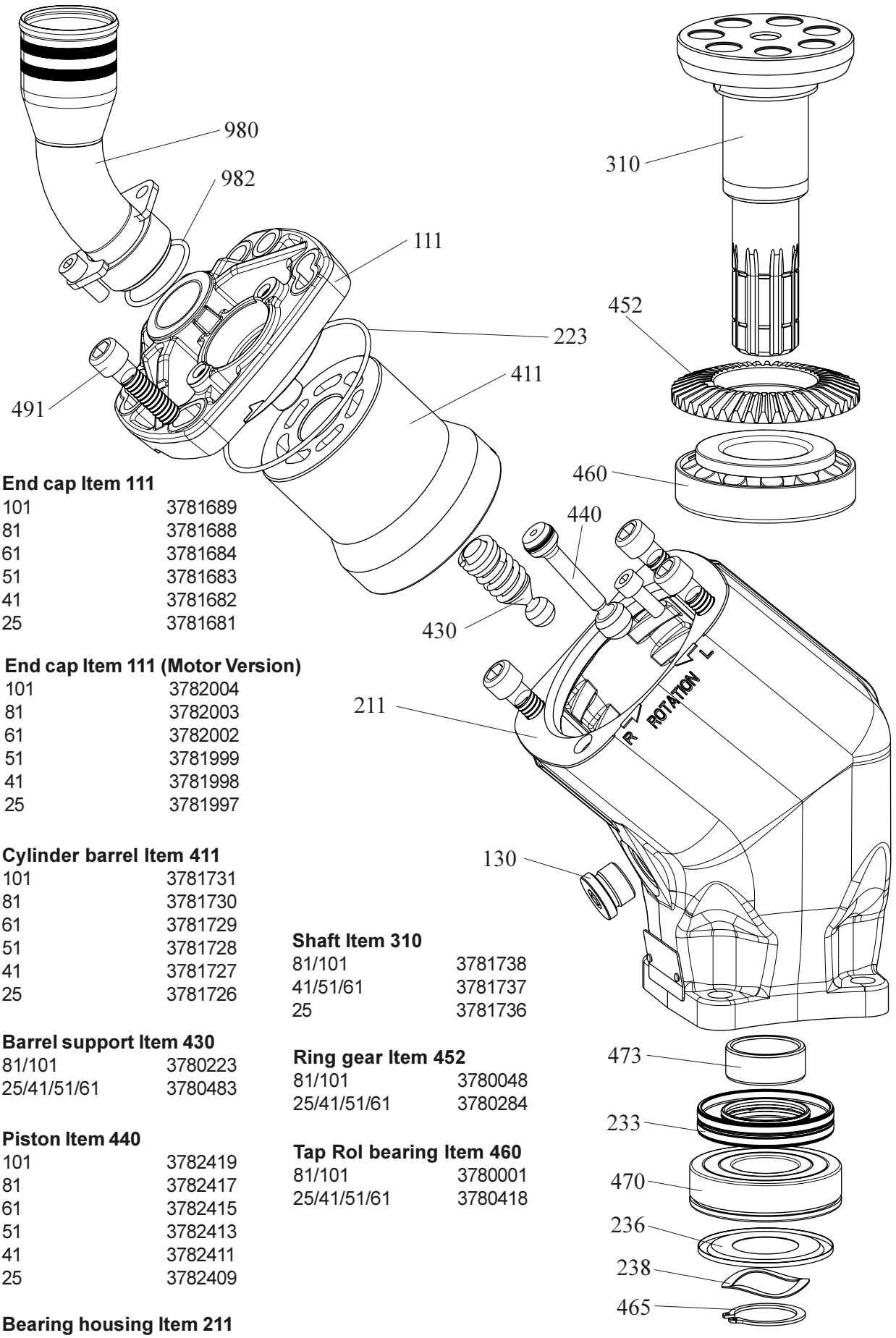

End cap Item 111

101	3781689
81	3781688
61	3781684
51	3781683
41	3781682
25	3781681

End cap Item 111 (Motor Version)

101	3782004
81	3782003
61	3782002
51	3781999
41	3781998
25	3781997

Cylinder barrel Item 411

101	3781731
81	3781730
61	3781729
51	3781728
41	3781727
25	3781726

Barrel support Item 430

81/101	3780223
25/41/51/61	3780483

Piston Item 440

101	3782419
81	3782417
61	3782415
51	3782413
41	3782411
25	3782409

Bearing housing Item 211

81/101	3781723
25/41/51/61	3781722

Shaft Item 310

81/101	3781738
41/51/61	3781737
25	3781736

Ring gear Item 452

81/101	3780048
25/41/51/61	3780284

Tap Rol bearing Item 460

81/101	3780001
25/41/51/61	3780418

Spare Part Kits and Tools

Serial No. from 2000200001
Items included in the seal kit for **double** shaft seal.
130, 223, 233, 236, 238, 465, 470, 473, 982.

Unit	Part no.
F1-25, -41, -51, -61, -81, -101, T1-81, -121	3780862

Items included in the Seal Kit for T1-51

130, 227, 228, 233, 241

Unit	Part no.
T1-51	3793572

Items included in the Spare Part Kits for the 5 & 7-piston version.
111, 130, 223, 233, 236, 238, 411, 430, 440, 465, 470, 473, 982.

Unit	Part no.
F1-25	3781844
F1-41	3781845
F1-51	3781846
F1-61	3781847
F1-81	3781848
F1-101	3781849

Items included in the Spare Part Kits for T1.
111, 130, 223, 233, 236, 238, 411, 430, 440, 465, 470, 473, 982.

Unit	Part no.
T1-51	3782809
T1-81	3782807
T1-121	3782808

Detail	Part no.
Disassembling/ Reassembling Tool	3780917

Parts Specification

Item	Description
111	End Cap
130	Hex Socket Plug
211	Bearing Housing
223	O-ring
227	O-ring
228	Gasket
233	Shaft Seal
236	Protective Washer
238	Waved Spring Washer
241	Gasket
310	Shaft
411	Cylinder Barrel
430	Barrel Support
440	Piston
452	Ring Gear
460	Tappered Roller Bearing
465	Retaining Ring
470	Roller Bearing
473	Inner Ring
491	Hex Socket Screw
980	Suction Fitting
982	O-ring

Exchange Units

Unit	Part no.
F1-25	3780856
F1-41	3780857
F1-51	3780858
F1-61	3780859
F1-81	3780860
F1-101	3780861

Note! Not on all markets.

www.comoso.com