www.comoso.com

General Description

Series D*1FE pilot operated proportional valves are designed for high precision applications that require a safe middle position of the main spool at power down.

The pilot is a 3-position valve with an overlapped middle position. This ensures that the main stage spring pushes the spool into the middle position at power down without an unintended jerk of the actuator.

The D*1FE series is available in 5 sizes:

D31FE NG10 (CETOP 5)

D41FE NG16 (CETOP 7)

D91FE NG25 (CETOP 8) for port diam. up to 32 mm

D111FE NG32 (CETOP10)

The innovative integrated regenerative function in the A-line (optional) allows new energy saving circuits with differential cylinders. The hybrid version can switch between regenerative mode and standard mode at any time.

D41FE Standard

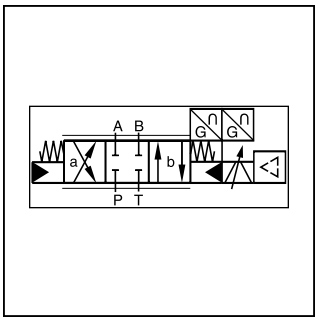

Standard D*1FE

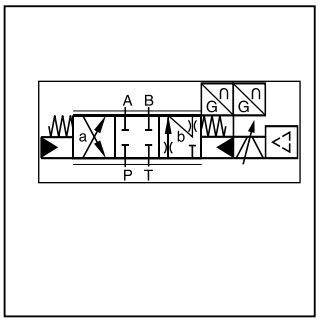

NEW: A-Regeneration D*1FER

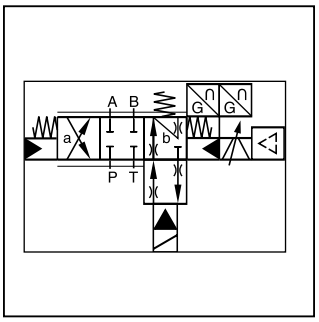

NEW: Hybrid D*1FEZ

Features

- High dynamics.
- High flow.
- Defined spool positioning at power-down.
- Onboard electronics.
- **NEW:** Energy saving A-regeneration optionally integrated.
- **NEW:** Switchable hybrid version.

D41FEE52 (Standard)

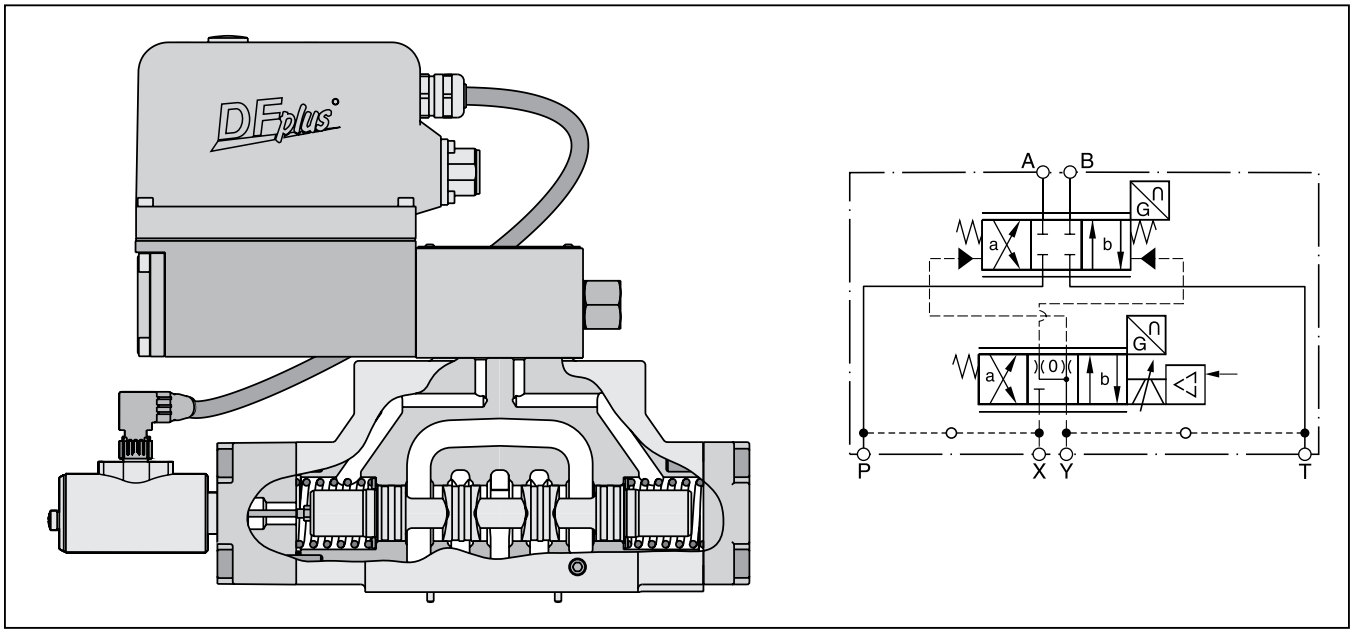

www.comoso.com

A

D*1FER and D*1FEZ

Regenerative Valve D*1FER

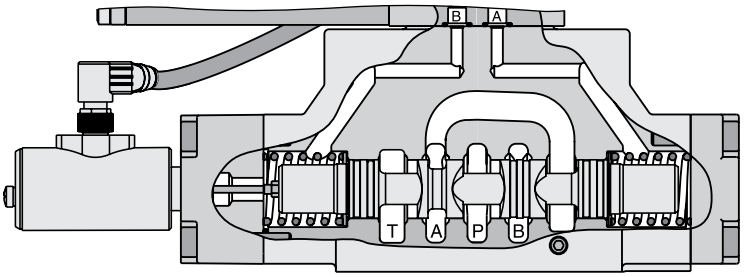

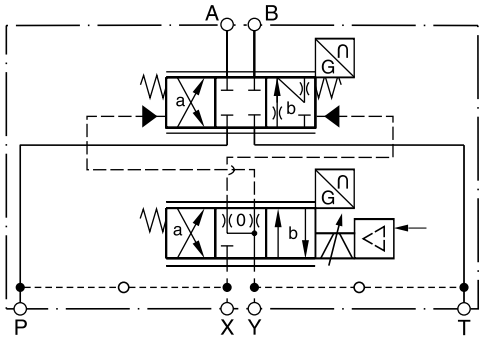

Hybrid Valve D*1FEZ

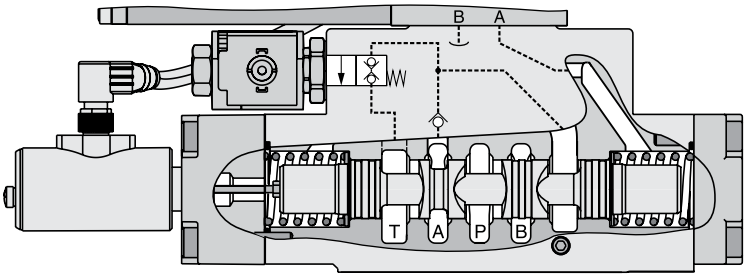

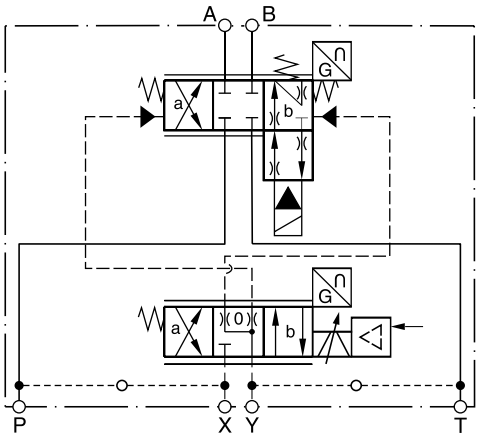

D*1FER (Regenerative Valve)

Cylinder extending

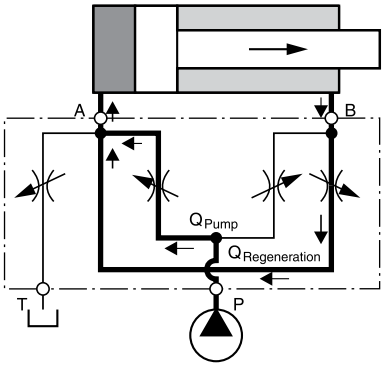

D*1FEZ (Hybrid Valve)

Cylinder extending
in regenerative mode (high speed)

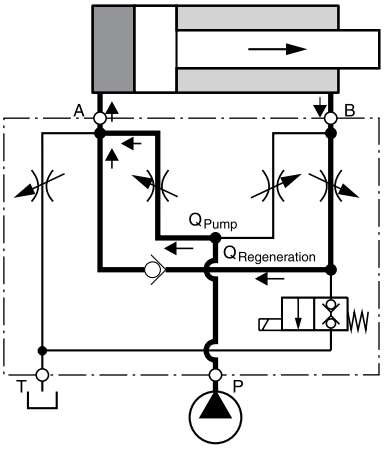

Cylinder extending
in standard mode (high force)

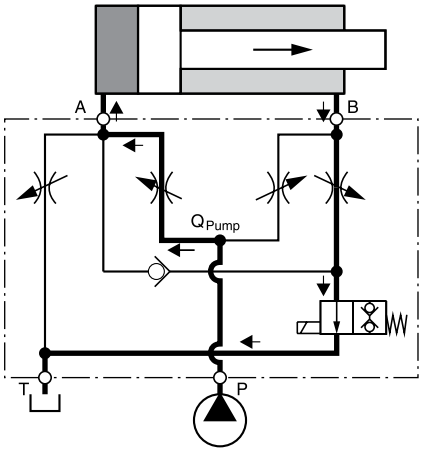

Flow Rate in % of Nominal Flow

Size	Spool	Port					
		A-T	P-A	P-B	B-A (R-Valve)	B-A (Hybrid)	B-T (Hybrid)
D41FER/Z	31/32	100%	50%	100%	50%	40%	20%
D91FER/Z	31/32	100%	50%	100%	50%	50%	25%
D111FER/Z	31/32	on request					

D_1FE.indd, dd

Parker Hannifin Corporation
Hydraulic Valve Division
Elyria, Ohio, USA

www.comoso.com

Ordering Information

Series D*1FE

D	[ ]	1	F	E	[ ]	[ ]	C	[ ]	[ ]	[ ]	[ ]	[ ]	[ ]	[ ]
Directional Control Valves	Size	NG6 Pilot	Flow Control	High Response	Spool	Flow	Spool Position	Pilot Connection	Seal	Input Signal	Options	Hybrid Option	Design Series	

NOTE: Not required when ordering.

A

Code	Description
3	NG10 / CETOP 5
4	NG16 / CETOP 7
9 [1]	NG25 / CETOP 8
11	NG32 / CETOP 10

[1] With enlarged connections Ø 32 mm

Code	Description
N	Nitrile
V	Fluorocarbon
H	For HFC fluid

Code	Description
0	Standard for Spool Codes B, E, R
L [5]	Hybrid valve 24V normaly closed for spool type Z

[5] See page page A114 for regenerative and hybrid spool information. (not available in D31FE).

Standard		NEW: Regenerative Function [2]		NEW: Hybrid Function [4]	
Code	Spool Type	Code	Spool Type	Code	Spool type
E01	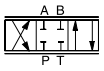	R31	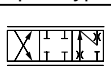	Z31	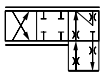
E02		R32		Z32	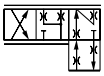
B31	$Q_B = Q_A/2$ 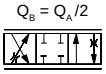				
B32	$Q_B = Q_A/2$ 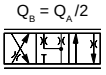				

[2] Not available in D91FE.
[4] Not available in D31FE.

Code	Inlet	Drain
1	Internal	External
2	External	External
4	Internal	Internal
5	External	Internal

Code	Description
0	6+PE acc. EN175201-804
5	11+PE acc. EN175201-804
7	6+PE + Enable

D31FE spooltype: R31 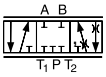

R32 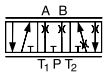

R61 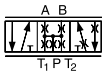

Code	Signal	Function
B	0...±10V	0...+10V P -> B
E	0...±20mA	0...+20mA P -> B
K	0...±10V	0...+10V P -> A
S	4...20mA	12...20mA P -> A

Code	Flow LPM (GPM) at Δp 5 Bar (72.5 PSI) per metering edge			
	D31	D41	D91	D111
D	90 (24)	—	—	—
E	120 (32)	—	—	—
F	—	200 (53)	—	—
H	—	—	450 (119)	—
L	—	—	—-	1000 (265)

Weight:

D31FE	11.3 kg (24.9 lbs.)
D41FE	14.2 kg (31.3 lbs.)
D91FE	23.5 kg (51.8 lbs.)
D111FE	64.5 kg (142.2 lbs.)

Parker Hannifin Corporation
Hydraulic Valve Division
Elyria, Ohio, USA

www.comoso.com

A

General				
Design	Proportional directional control valve, pilot operated			
Actuation	VCD® actuator			
Size	**NG10 (CETOP 5) D31**	**NG16 (CETOP 7) D41**	**NG25 (CETOP 8) D91**	**NG32 (CETOP 10) D111**
Mounting Interface	DIN 24340 / ISO 4401 / CETOP RP121 / NFPA			
Mounting Position	Unrestricted			
Ambient Temperature [°C]	-20...+60; (-4°F...+140°F)			
$MTTF_D$ Value [years]	50			
Vibration Resistance [g]	10 Sinus 5...2000 Hz acc. IEC 68-2-6 30 Random noise 20...2000 Hz acc. IEC 68-2-36 15 Shock acc. IEC 68-2-27			
Hydraulic				
Maximum Operating Pressure	Pilot Drain Internal: Ports P, A, B, X 350 Bar (5075 PSI); Port T, Y 35 Bar (507.5 PSI) Pilot Drain External: Ports P, A, B, T, X 350 Bar (5075 PSI); Port Y 35 Bar (507.5 PSI)			
Fluid	Hydraulic oil as per DIN 51524...535, other on request			
Fluid Temperature [°C]	-20...+60; (-4°F...+140°F)			
Viscosity **Permitted [cSt] / [mm²/s]** **Recommended [cSt] / [mm²/s]**	 20...380 (93...1761 SSU) 30...80 (139...371 SSU)			
Filtration	ISO 4406 (1999) 18/16/13 (acc. NAS 1638: 7)			
Nominal Flow at Δp=Bar (72.5 PSI) per Control Edge [1] LPM (GPM)	120 (31.7)	200 (52.9)	400/450 (105.8/119.0)	1000 (264.2)
Max. Recommended Flow (Standard) LPM (GPM)	250 (66.1)	600 (158.7)	1000 (264.2)	3000 (792.5)
Regenerative B-A / B-T	Depending on application, all flow curves			
Leakage at 100 Bar (1450 PSI) [ml/min]	200 (12 cu. in.)	200 (12 cu. in.)	600 (37 cu. in.)	1000 (61 cu. in.)
Pilot [ml/min]	<100 (6.1 cu. in.)	<100 (6.1 cu. in.)	<100 (6.1 cu. in.)	<100 (6.1 cu. in.)
Pilot Supply Pressure	20 Bar (290 PSI) 350 Bar (5075 PSI)			
Pilot Flow, Step Response @ 210 Bar	9 LPM (2.4 GPM)	10 LPM (2.6 GPM)	18 LPM (4.8 GPM)	30 LPM (7.9 GPM)
Static / Dynamic				
Step Resp. at 100% Stroke [2] [ms]	13	19	24	60
Frequency Response **Amplitude ±5% at 210 Bar (3045 PSI) [Hz]** **Phase ±5% at 210 Bar (3045 PSI) [Hz]**	 180 130	 80 100	 65 75	 38 64
Hysteresis [%]	<0.1			
Sensitivity [%]	<0.05			
Temperature Drift of Center Position [%K]	<0.025			

[1] Flow rate for different Δp per control edge: $Q_x = Q_{Nom.} \cdot \sqrt{\frac{\Delta p_x}{\Delta p_{Nom.}}}$

[2] Measured with load [210 Bar (3045 PSI) pressure drop/two control edges].

Continued on next page

www.comoso.com

A

Continued from previous page

Electrical		
Duty Ratio	**[%]**	100
Protection Class		IP65 in accordance with EN 60529 (with correctly mounted plug-in connector)
Supply Voltage/Ripple	**[V]**	18...30, ripple < 5% eff., surge free
Current Consumption Maximum	**[A]**	3.5
Pre-fusing Medium Lag	**[A]**	4.0
Input Signal		
Code K (B) Voltage	**[V]**	+10...0...-10, ripple < 0.01 % eff., surge free, 0...+10 P–>A (P–>B)
Impedence	**kOhm**	100
Code E Voltage	**[mA]**	+20...0...-20 ripple < 0.01 % eff., surge free, 0...+20mA P–>B
Impedence	**Ohm**	250
Code S Current	**[mA]**	4...12...20, ripple < 0.01 % eff., surge free, 12...20mA P–>A
Impedence	**Ohm**	250
	[mA]	< 3.6 mA = enable off, > 3.8 mA = enable on (acc. to NAMUR NE43)
Input Capacitance Typ.	**[nF]**	1
Differential Input Maximum		
Code 0	**[V]**	30 for terminal D and E against PE (terminal G) 11 for terminal D and E against 0V (terminal B)
Code 5	**[V]**	30 for terminal 4 and 5 against PE (terminal ⏚) 11 for terminal 4 and 5 against 0V (terminal 2)
Code 7	**[V]**	30 for terminal D and E against PE (terminal G)
Enable Signal Code 5 / 7	**[V]**	5...30, Ri = 9 kOhm
Diagnostic Signal	**[V]**	+10...0...-10 / +ub, rated max. 5 mA
EMC		EN 61000-6-2, EN 61000-6-4
Electrical Connection		
Code 0 / 7		6 + PE acc. to EN 175201-804
Code 5		11 + PE acc. to EN 175201-804
Wiring Minimum		
Code 0 / 7	**[mm²]**	7 x 1.0 (AWG16) overall braid shield
Code 5	**[mm²]**	11 x 1.0 (AWG20) overall braid shield
Wiring Length Maximum	**[m]**	50 (164 ft.)

Electrical Specifications Hybrid Option				
Duty Ratio		100%		
Protection Class		IP65 in accordance with EN 60529 (with correctly mounted plug-in connector)		
		D41	**D91**	**D111**
Supply Voltage	**[V]**	24	24	24
Tolerance Supply Voltage	**%**	±10	±10	±10
Current Consumption	**[A]**	1.21	0.96	1.29
Power Consumption	**[W]**	29	23	31
Solenoid Connection		Connector as per EN 175301-803		
Wiring Minimum	**[mm²]**	3 x 1.5 recommended		
Wiring Length Maximum	**[m]**	50 (164 ft.) recommended		

With electrical connections the protective conductor (PE ⏚) must be connected according to the relevant regulations.

www.comoso.com

A

Code 0
6 + PE acc. EN 175201-804

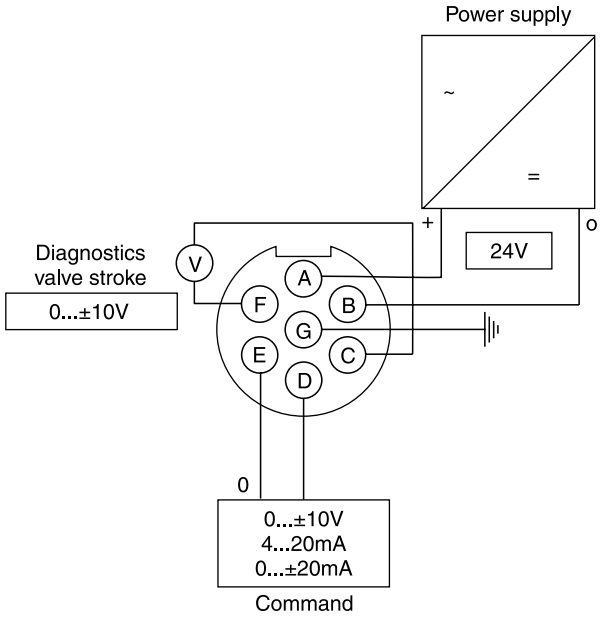

Code 5
11 + PE acc. EN 175201-804

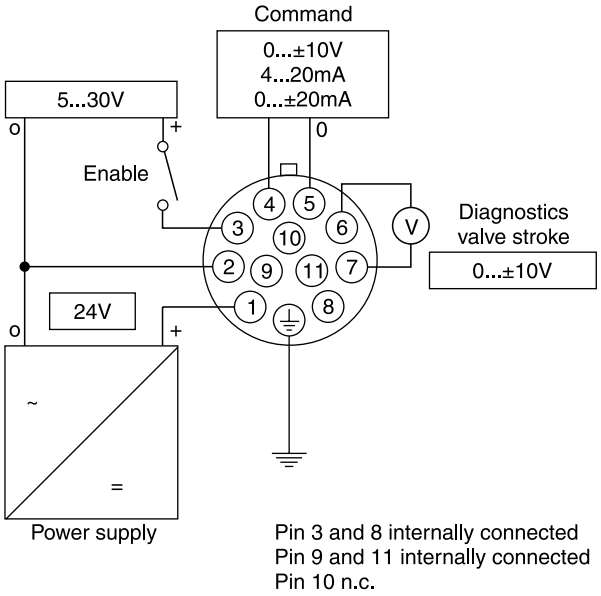

Code 7
6 + PE acc. EN 175201-804 + Enable

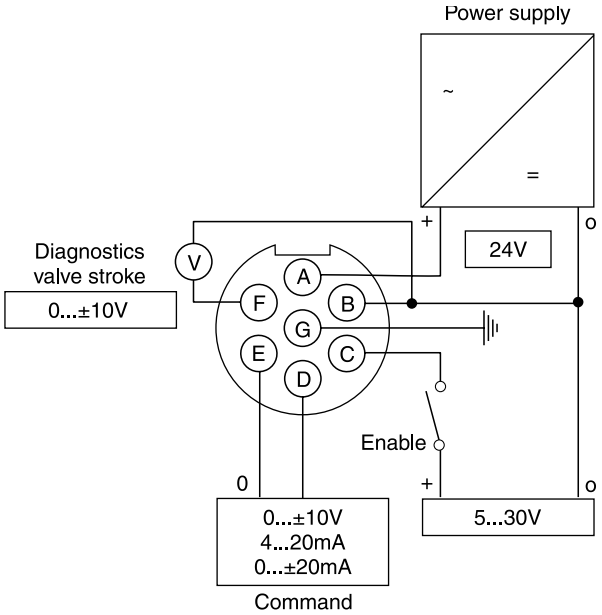

www.comoso.com

Frequency Response

±5% / ±25% / ±90% command signal
Dynamics at 210 bar pilot supply pressure

D31FE

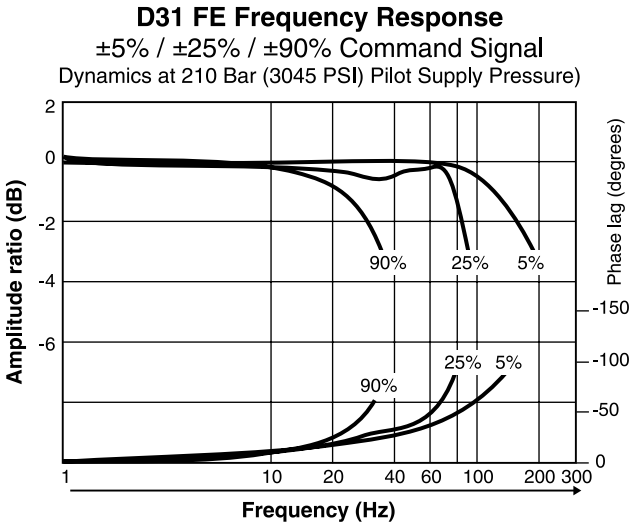

D41FE

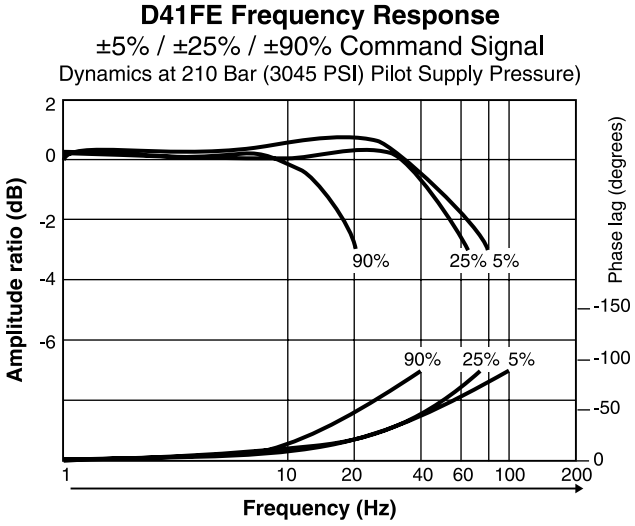

D91FE

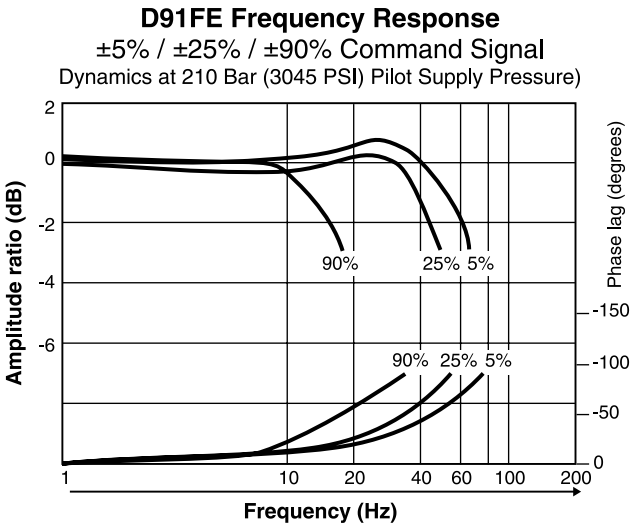

D111FE

Spool Type R/Z* on request

All performance curves measured with HLP46 at 50°C (122°F).

www.comoso.com

A

D*1FEB/E Flow

D31FE Flow Characteristics
at Δp = 5 Bar (72.5 PSI) / metering edge

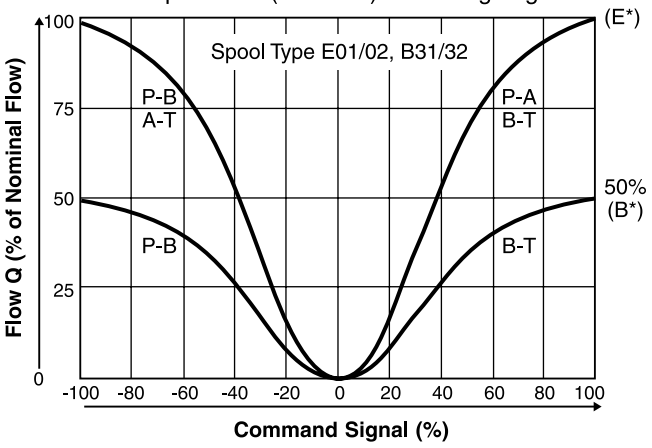

D41FE Flow Characteristics
at Δp = 5 Bar (72.5 PSI) / metering edge

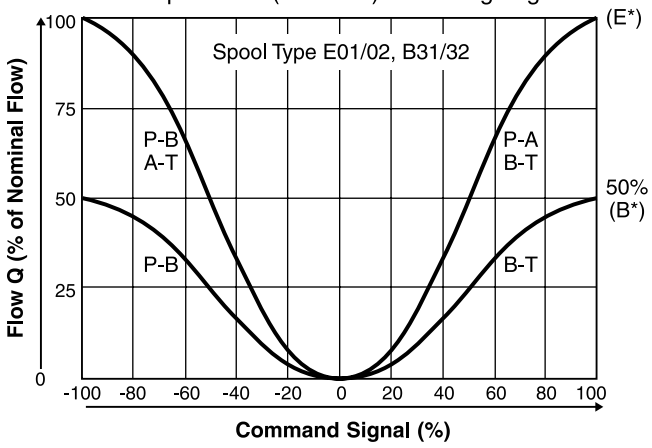

D91FE Flow Characteristics
at Δp = 5 Bar (72.5 PSI) / metering edge

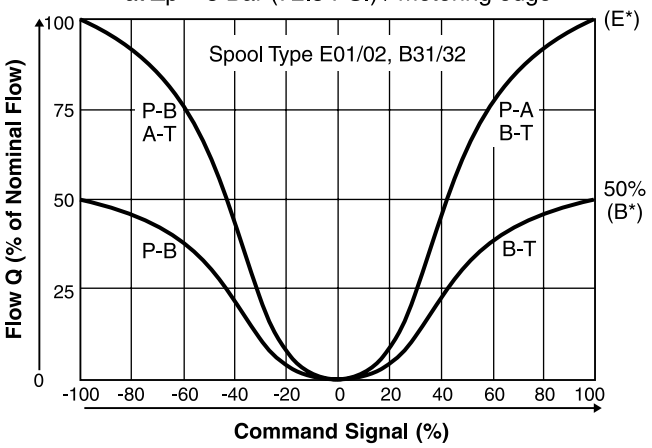

D111FE Flow Characteristics
at Δp = 5 Bar (72.5 PSI) / metering edge

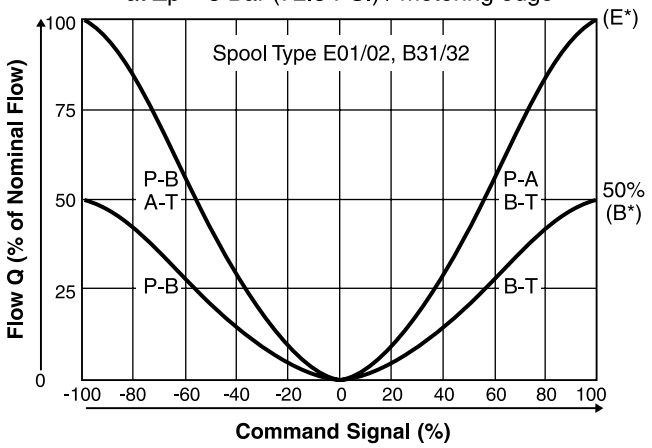

All performance curves measured with HLP46 at 50°C (122°F).

www.comoso.com

A

D*1FE R/Z Flow

D31FE R/Z

D31FE Flow Characteristics
at Δp = 5 Bar (72.5 PSI) / metering edge

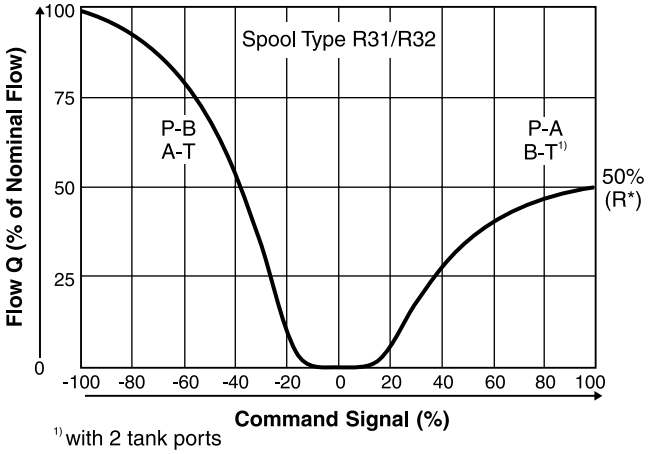

1) with 2 tank ports

D41FE R/Z

D41FE Flow Characteristics
at Δp = 5 Bar (72.5 PSI) / metering edge

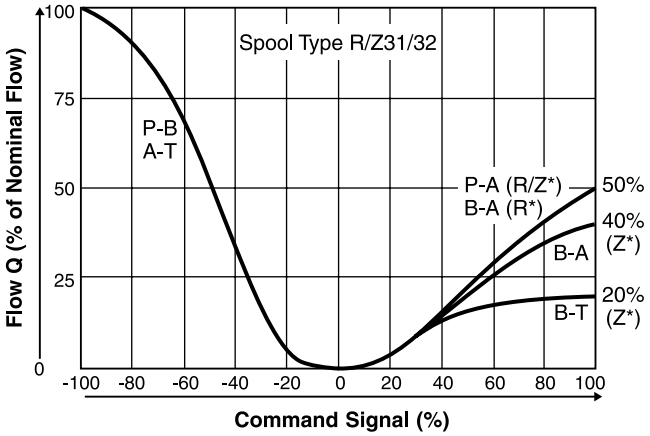

D91FE R/Z OBE

D91FE Flow Characteristics
at Δp = 5 Bar (72.5 PSI) / metering edge

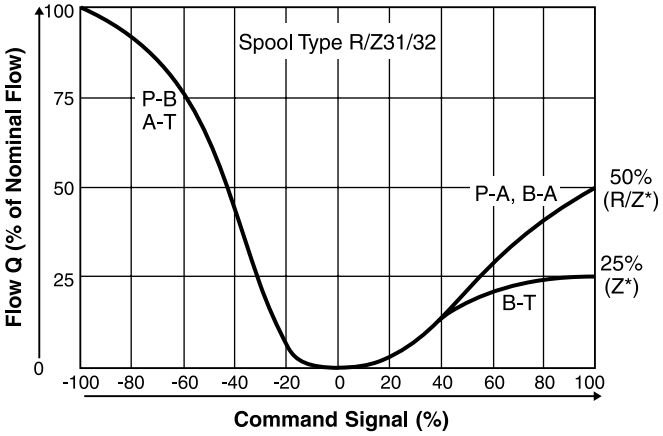

D111FEB R/Z*

SpoolType R/Z* on request

All performance curves measured with HLP46 at 50°C (122°F).

www.comoso.com

A

Pilot Flow — Pilot Oil Inlet (supply) and Outlet (drain)

○ open, ● closed

Pilot oil Inlet	Pilot oil Drain	B	C
internal	external	○	●
external	external	●	●
internal	internal	○	○
external	internal	●	○

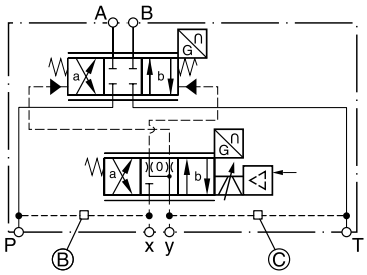

D31FEB/E

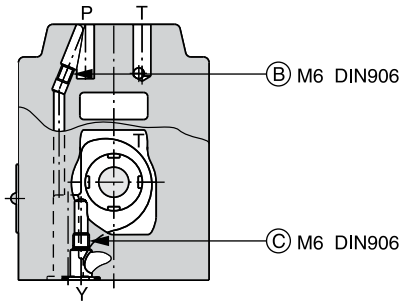

(drawn offset)

D31FER

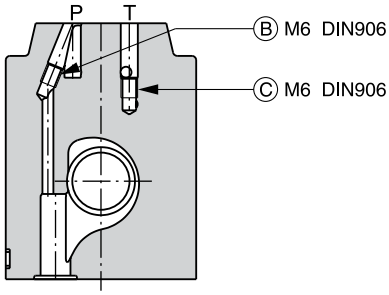

D41FEB/E

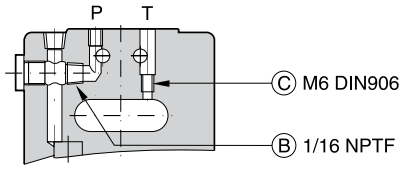

D41FER

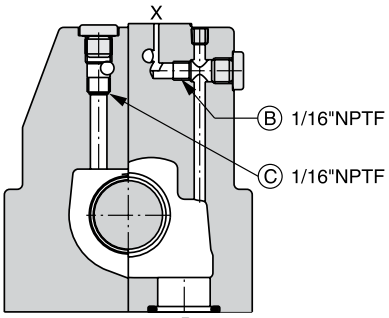

(drawn offset)

D41FEZ

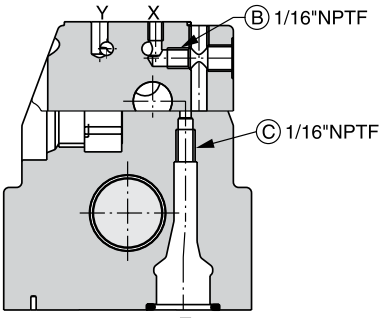

(drawn offset)

D91FEB/E

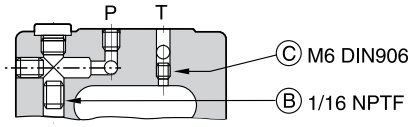

D91FER

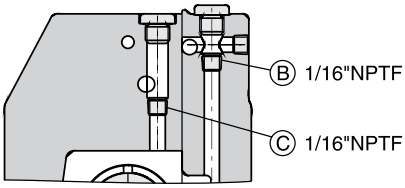

(drawn offset)

D91FEZ

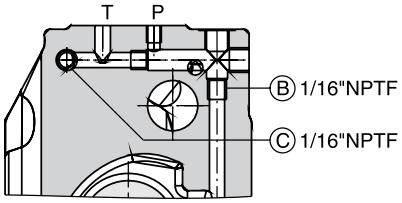

D111FEB/E

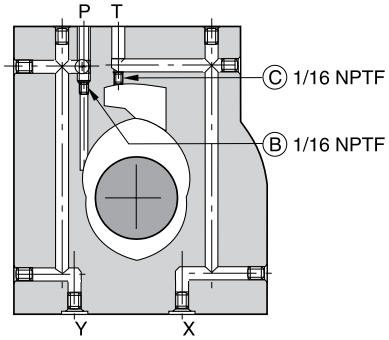

D111FER

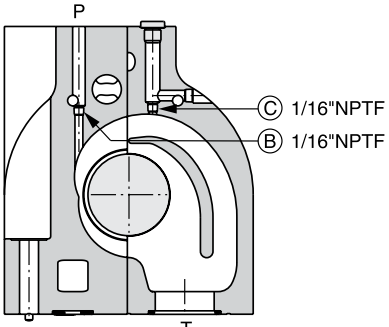

(drawn offset)

D111FEZ

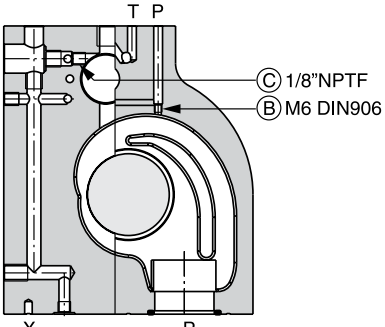

(drawn offset)

D_1FE.indd, dd

Parker Hannifin Corporation
Hydraulic Valve Division
Elyria, Ohio, USA

www.comoso.com

Inch equivalents for millimeter dimensions are shown in (**)

D31FE

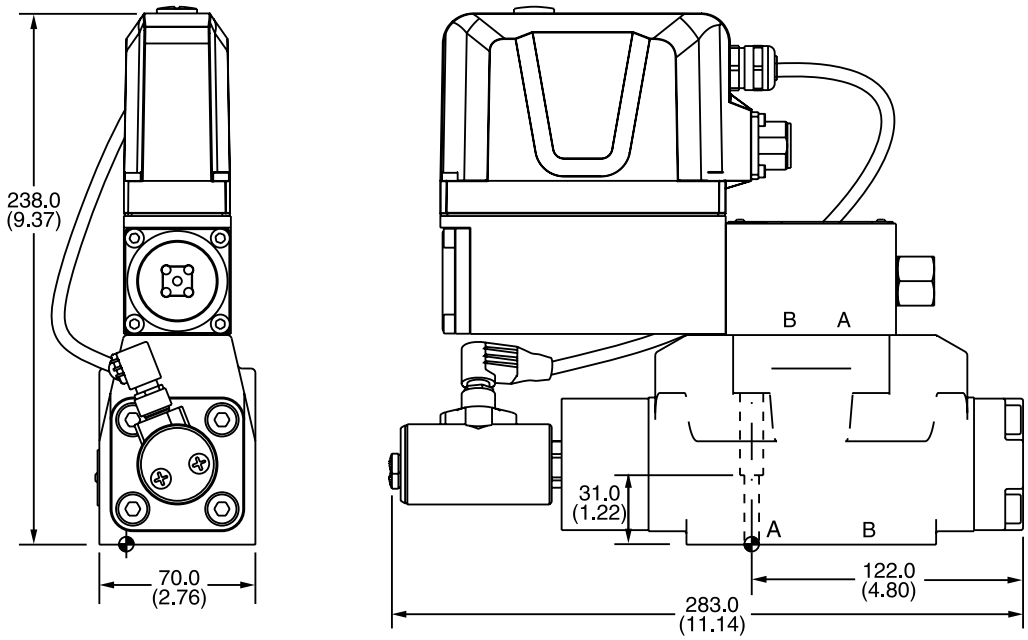

Surface Finish	Kit			Seal Kit
R_{max}6.3 ⏥ 0.01/100	BK385 BK98	4x M6x40 DIN 912 12.9 4x 1/4-20x1.625	13.2 Nm (9.7 lb.-ft.) ±15 %	Nitrile: SK-D31FP Fluorocarbon: SK-D31FP-V

D41FE

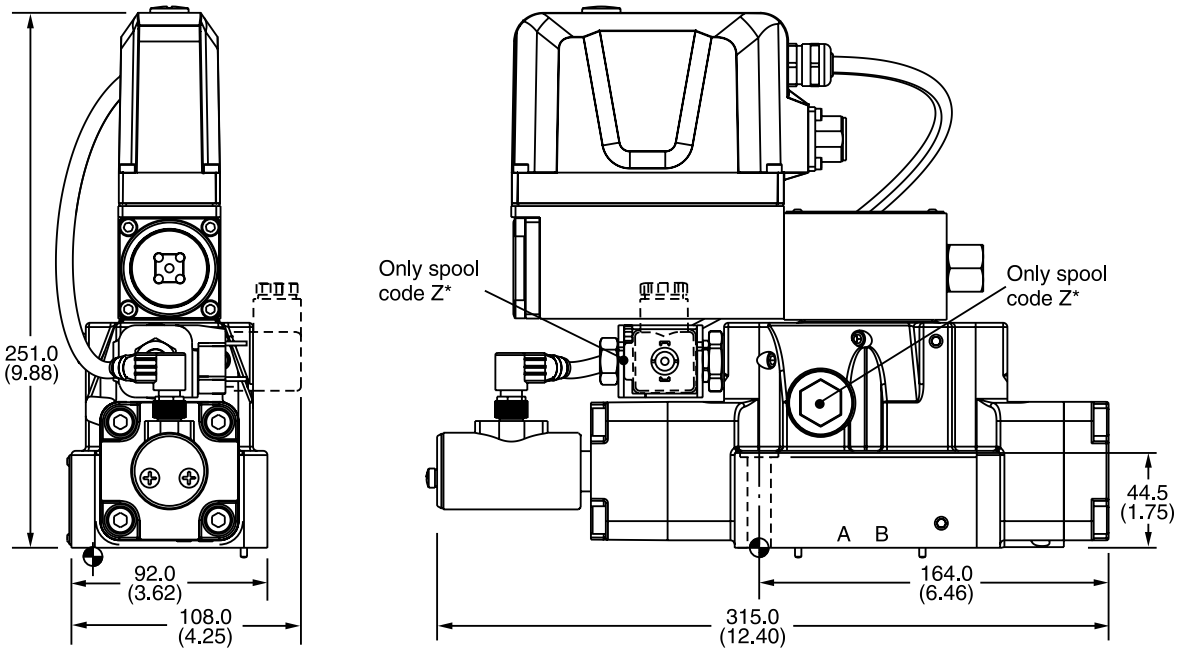

Surface Finish	Kit			Seal Kit
R_{max}6.3 ⏥ 0.01/100	BK320 BK160	2x M6x55 4x M10x60 DIN 912 12.9 4x 3/8-16x2.5 2x 1/4-20x2.5	13.2 Nm (9.7 lb.-ft.) 63 Nm (46.5 lb.-ft.) ±15 %	Nitrile: SK-D41FP Fluorocarbon: SK-D41FP-V

D_1FE.indd, dd

Parker Hannifin Corporation
Hydraulic Valve Division
Elyria, Ohio, USA

www.comoso.com

A

Inch equivalents for millimeter dimensions are shown in (**)

D91FE

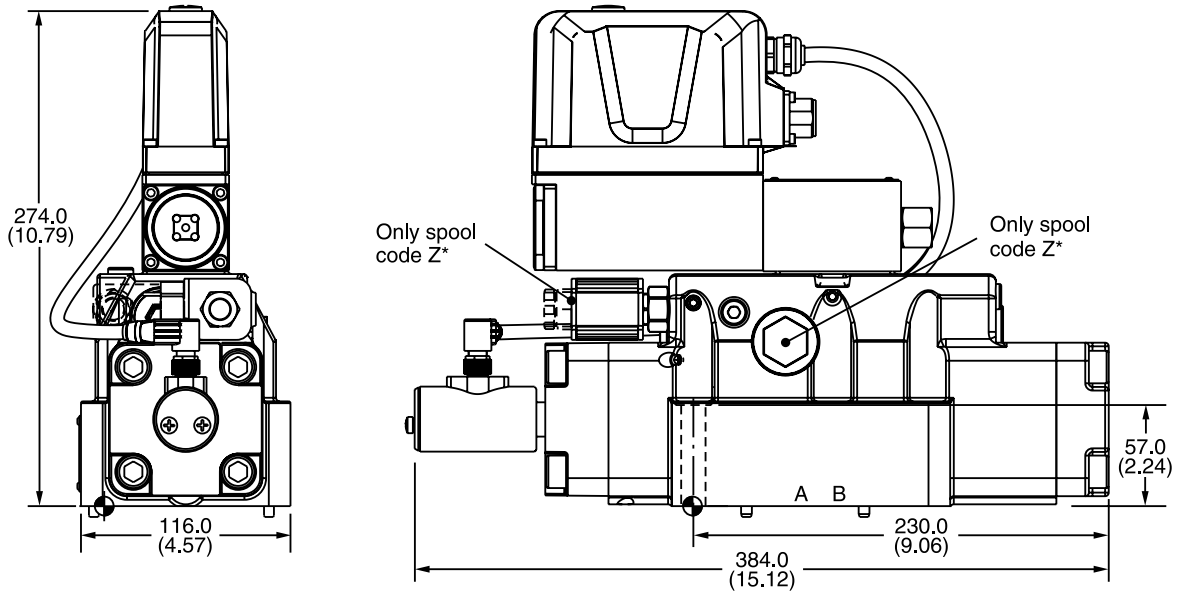

Surface Finish	Kit			Seal Kit
R_{max}6.3 ▱ 0.01/100	BK360 BK228	6x M12x75 DIN 912 12.9 6x 1/2-13x3.0	108 Nm (79.7 lb.-ft.) ±15 %	Nitrile: SK-D91FP Fluorocarbon: SK-D91FP-V

D111FE

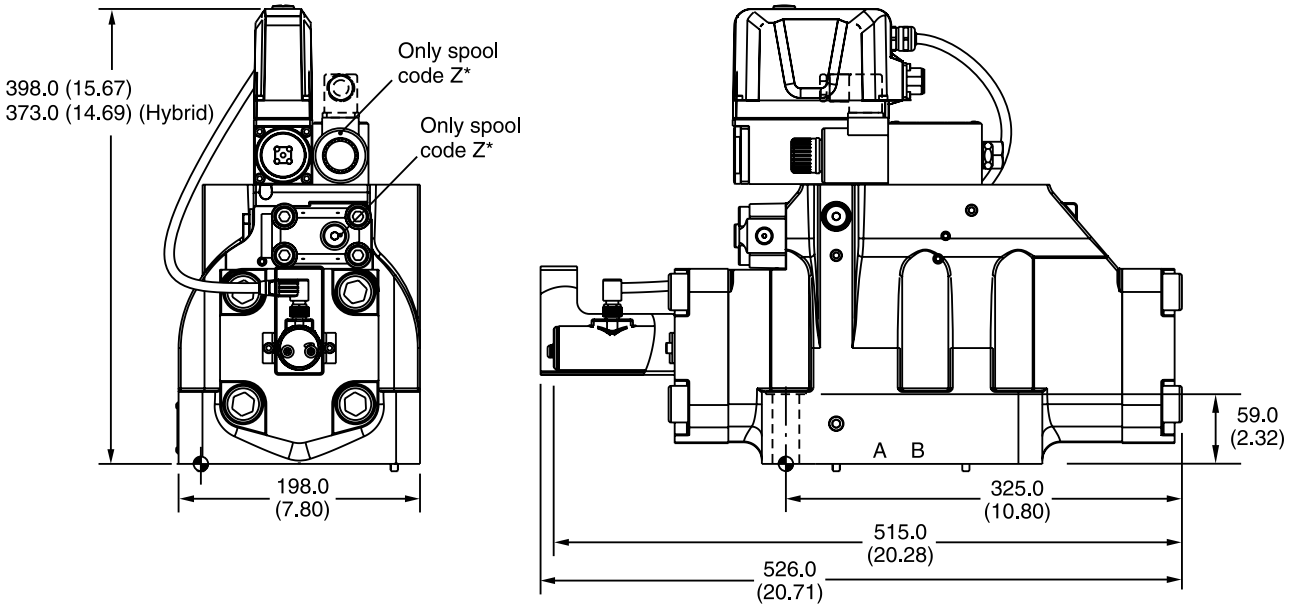

Surface Finish	Kit			Seal Kit
R_{max}6.3 ▱ 0.01/100	BK386 BK150	6x M20x90 DIN 912 12.9 6x 3/4-10x3.5	517 Nm (381.3 lb.-ft.) ±15 %	Nitrile: SK-D111FP Fluorocarbon: SK-D111FP-V