TITLE	DRAWING NUMBER	REVISION	STATUS	
SERVICE PARTS P3145 DESIGN SERIES 12	P2-145-0406	-	PR	SHEET 1 OF 7

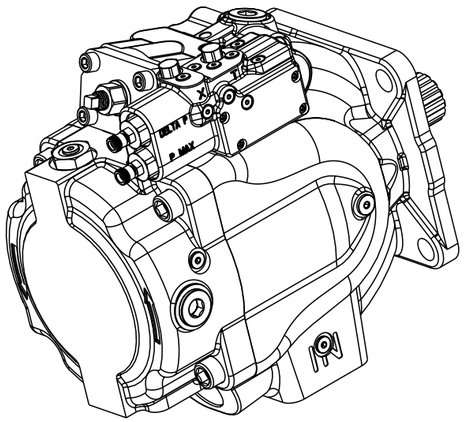

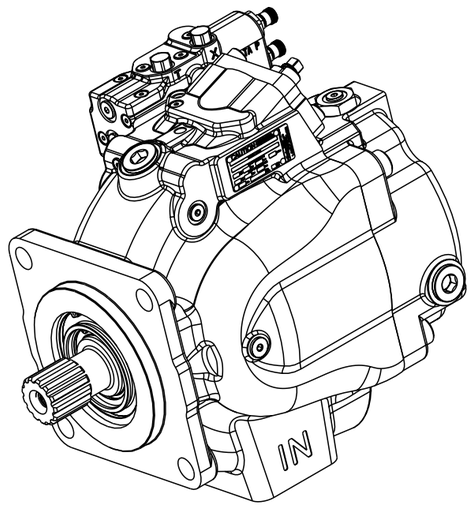

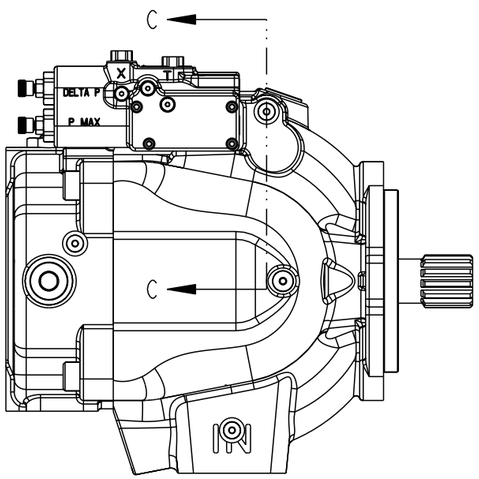

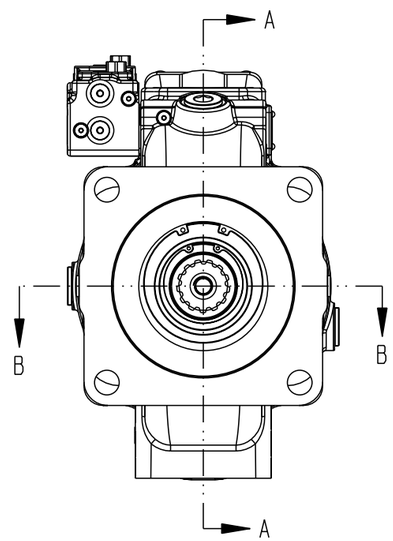

NOTES:
1 PUMP SHOWN IS A RIGHT HAND (CW) ROTATION PUMP. LEFT HAND (CCW) ROTATION PUMPS HAVE OUTLET GAUGE PORT REVERSED.

Parker Hannifin GmbH
Hydraulik Controls Division
Kaarst, Germany

Parker Hannifin Corporation
Hydraulic Pump/Motor Division
Greeneville, Tennessee

DRAWN BY	DATE	CHANGED BY	DATE	ECN NUMBER
STREHLOW	31OCT02	B. LARKIN	08NOV02	133698

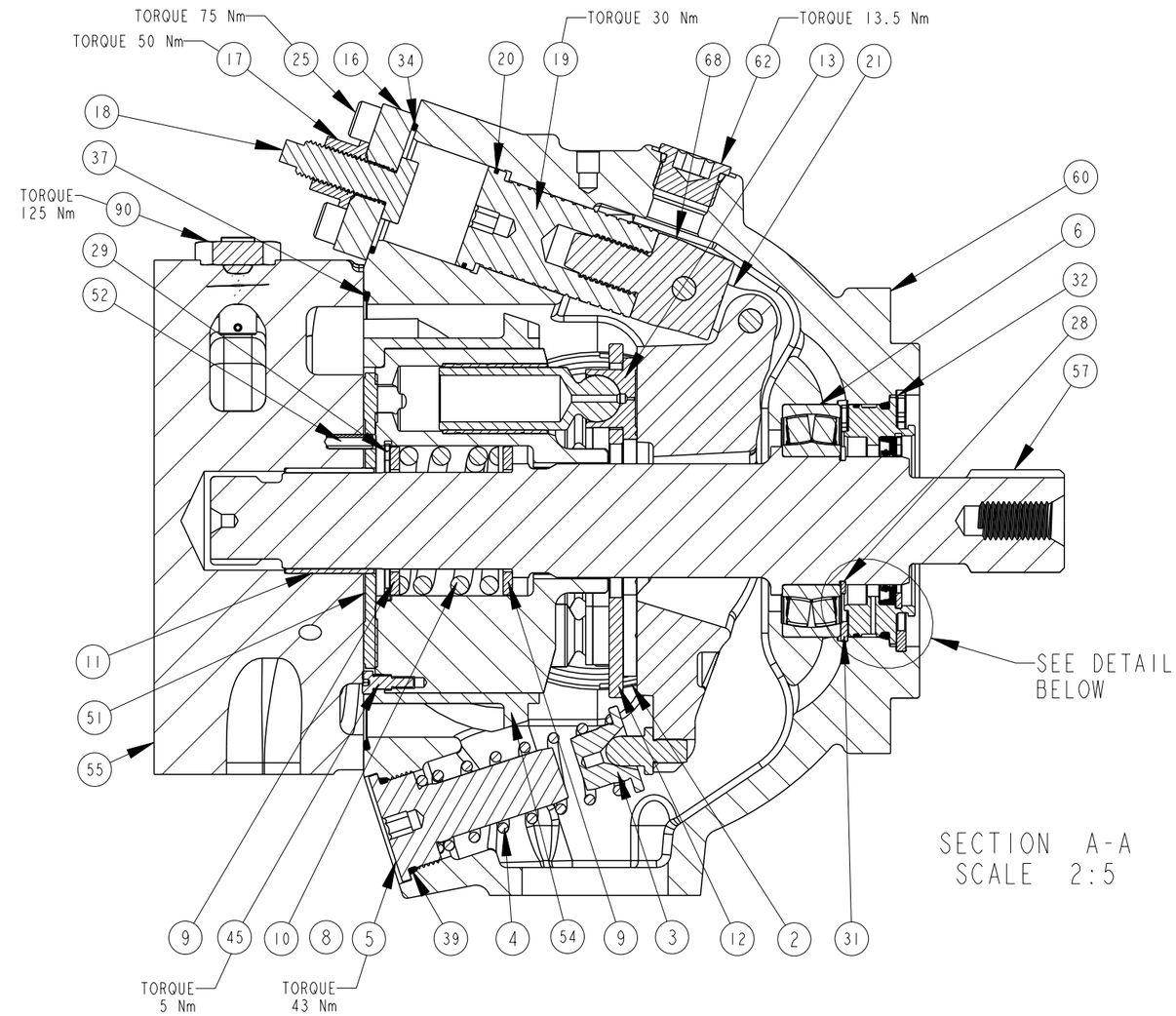

SECTION A-A
SCALE 2:5

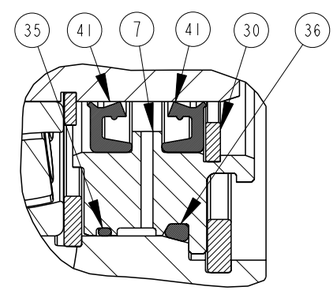

DUAL SHAFT SEAL ASSEMBLY
P2-105-0210-02□
SECTION A-A
SCALE 1:1

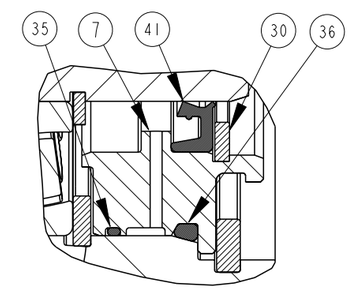

SINGLE SHAFT SEAL ASSEMBLY
P2-105-0210-01□
SECTION A-A
SCALE 1:1

Parker Hannifin GmbH
Hydraulik Controls Division
Kaarst, Germany

Parker Hannifin Corporation
Hydraulic Pump/Motor Division
Greeneville, Tennessee

www.comoso.com

TITLE	DRAWING NUMBER	REVISION	STATUS	
SERVICE PARTS P3145 DESIGN SERIES 12	P2-145-0406	-	PR	SHEET 2 OF 7

DRAWN BY	DATE	CHANGED BY	DATE	ECN NUMBER
STREHLOW	31OCT02	B. LARKIN	08NOV02	133698

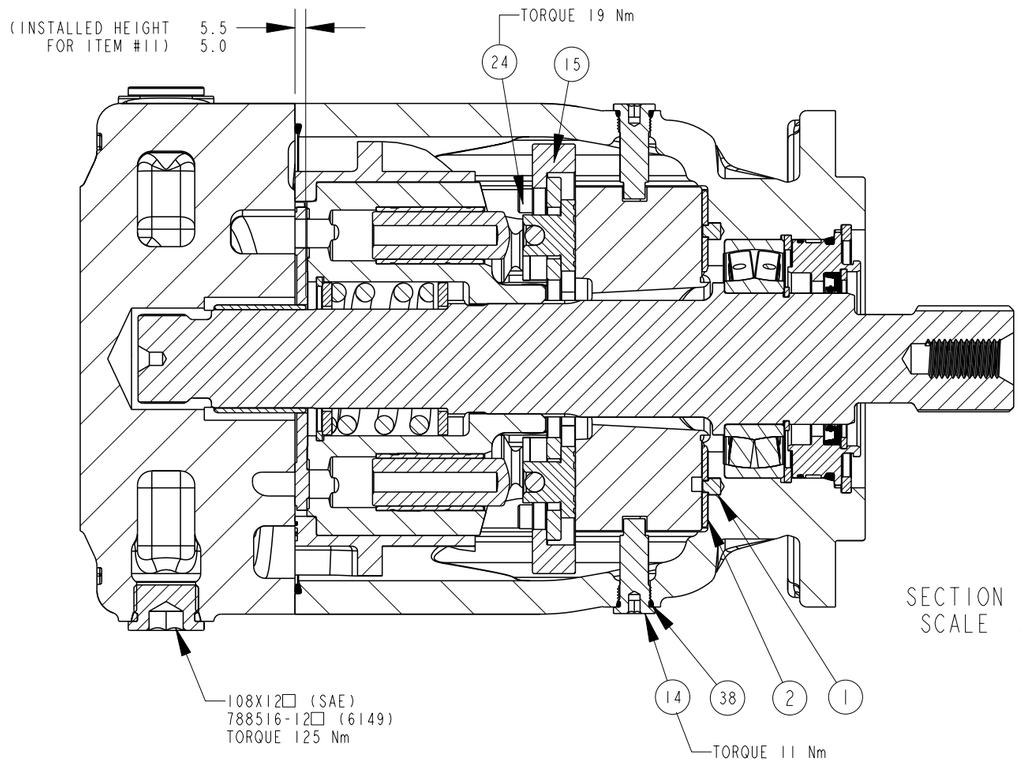

SECTION B-B
SCALE 2:5

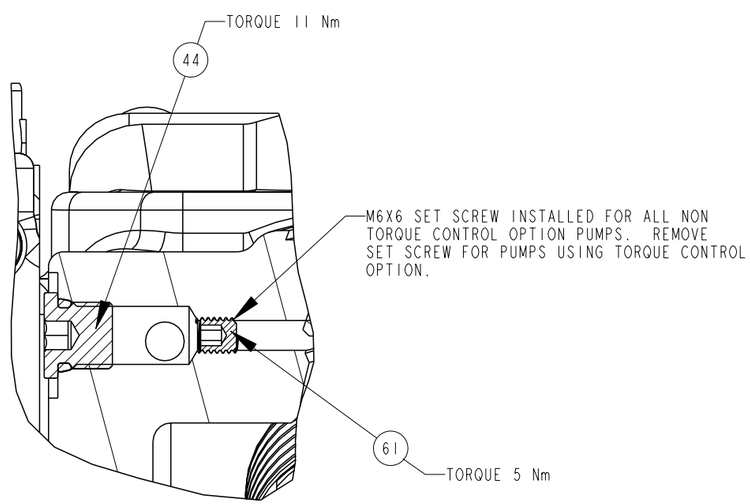

SECTION C-C
SCALE 1:1

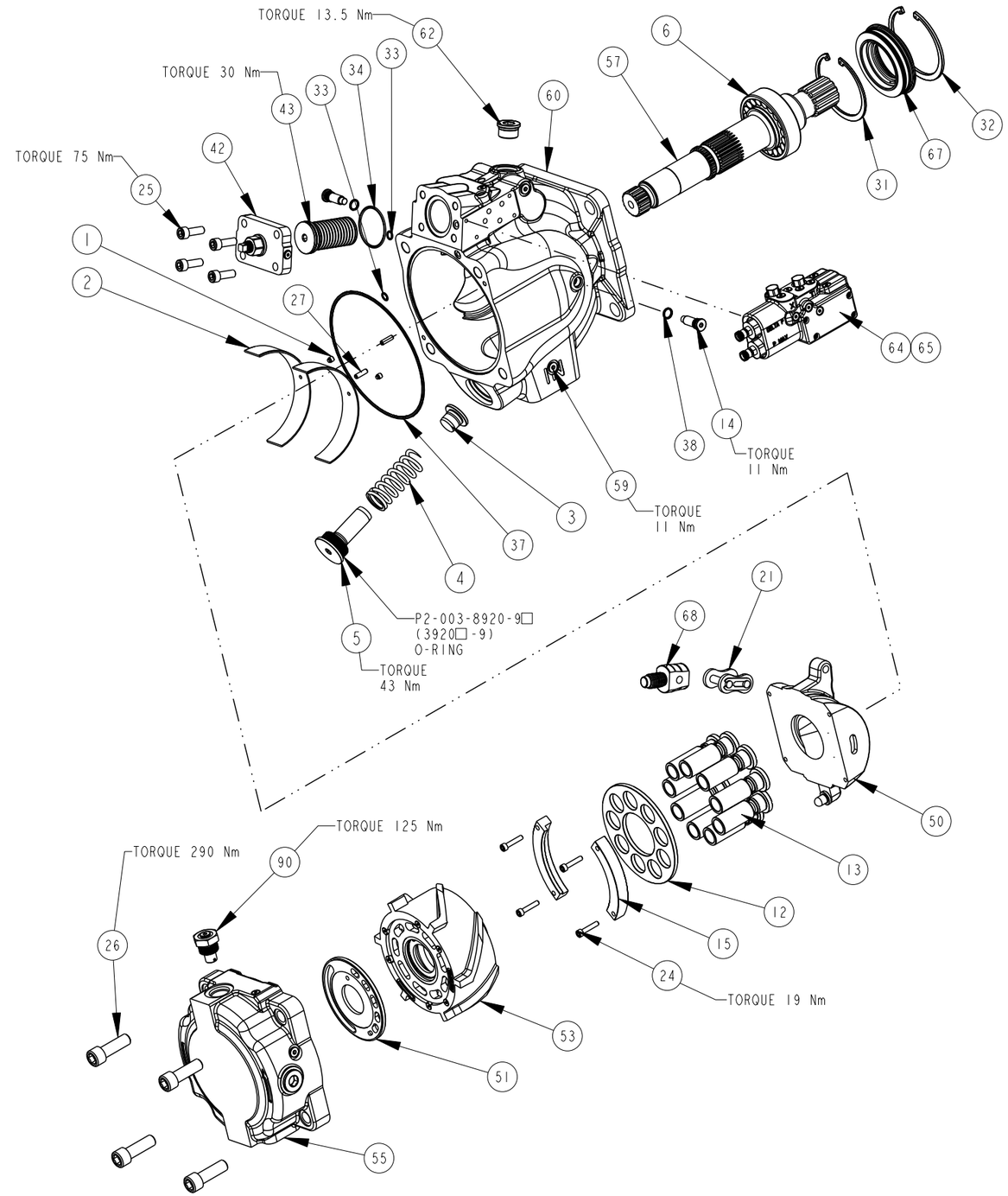

Parker Hannifin GmbH
Hydraulik Controls Division
Kaarst, Germany

Parker Hannifin Corporation
Hydraulic Pump/Motor Division
Greeneville, Tennessee

www.comoso.com

TITLE	DRAWING NUMBER	REVISION	STATUS	
SERVICE PARTS P3145 DESIGN SERIES 12	P2-145-0406	-	PR	SHEET 3 OF 7

COMPENSATOR KITS

SINGLE SPOOL OPTIONS - ITEM 64

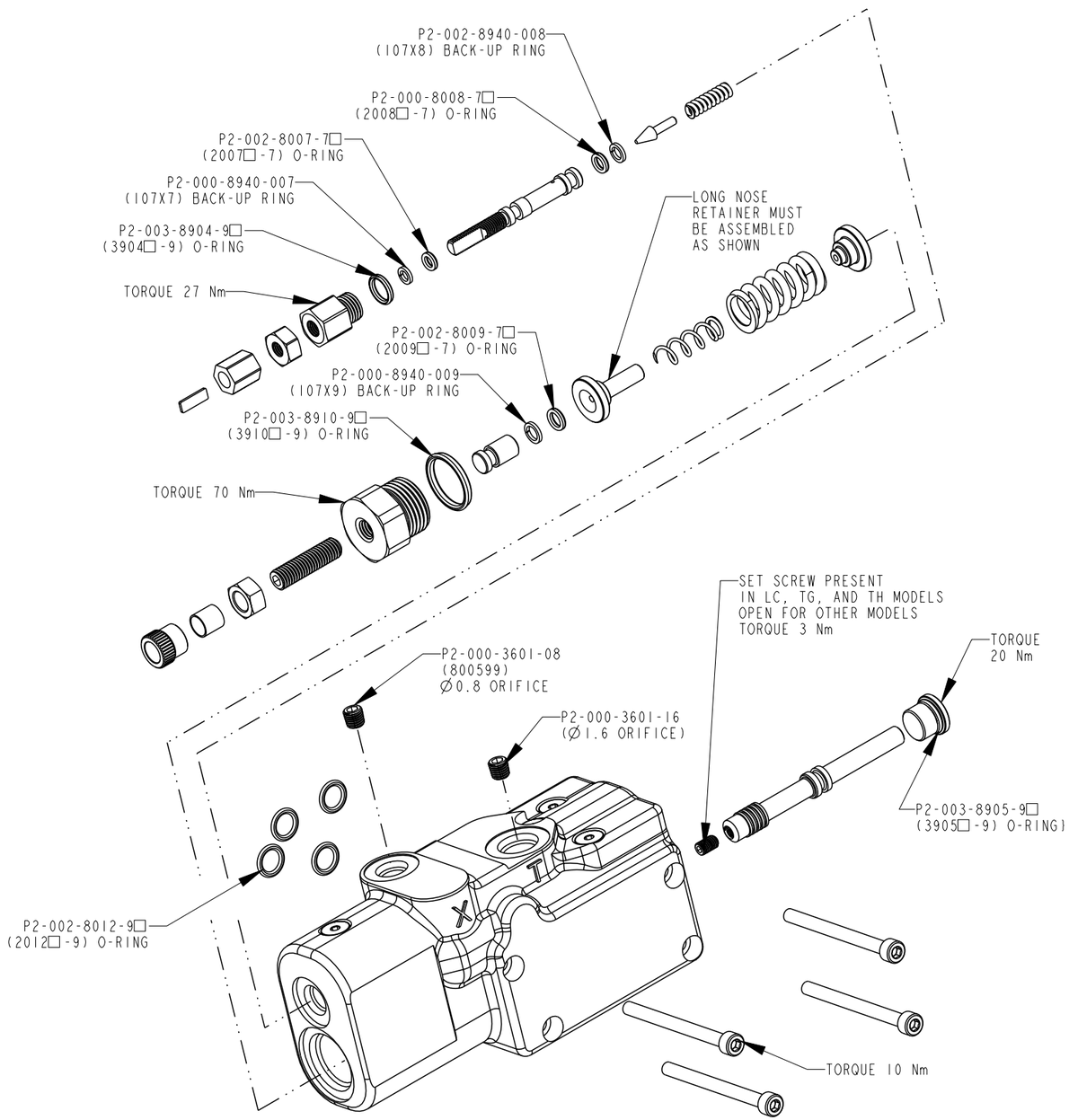

DRAWN BY	DATE	CHANGED BY	DATE	ECN NUMBER
STREHLOW	31OCT02	B. LARKIN	08NOV02	133698

COMPENSATOR KITS

DUAL SPOOL OPTIONS - ITEM 65

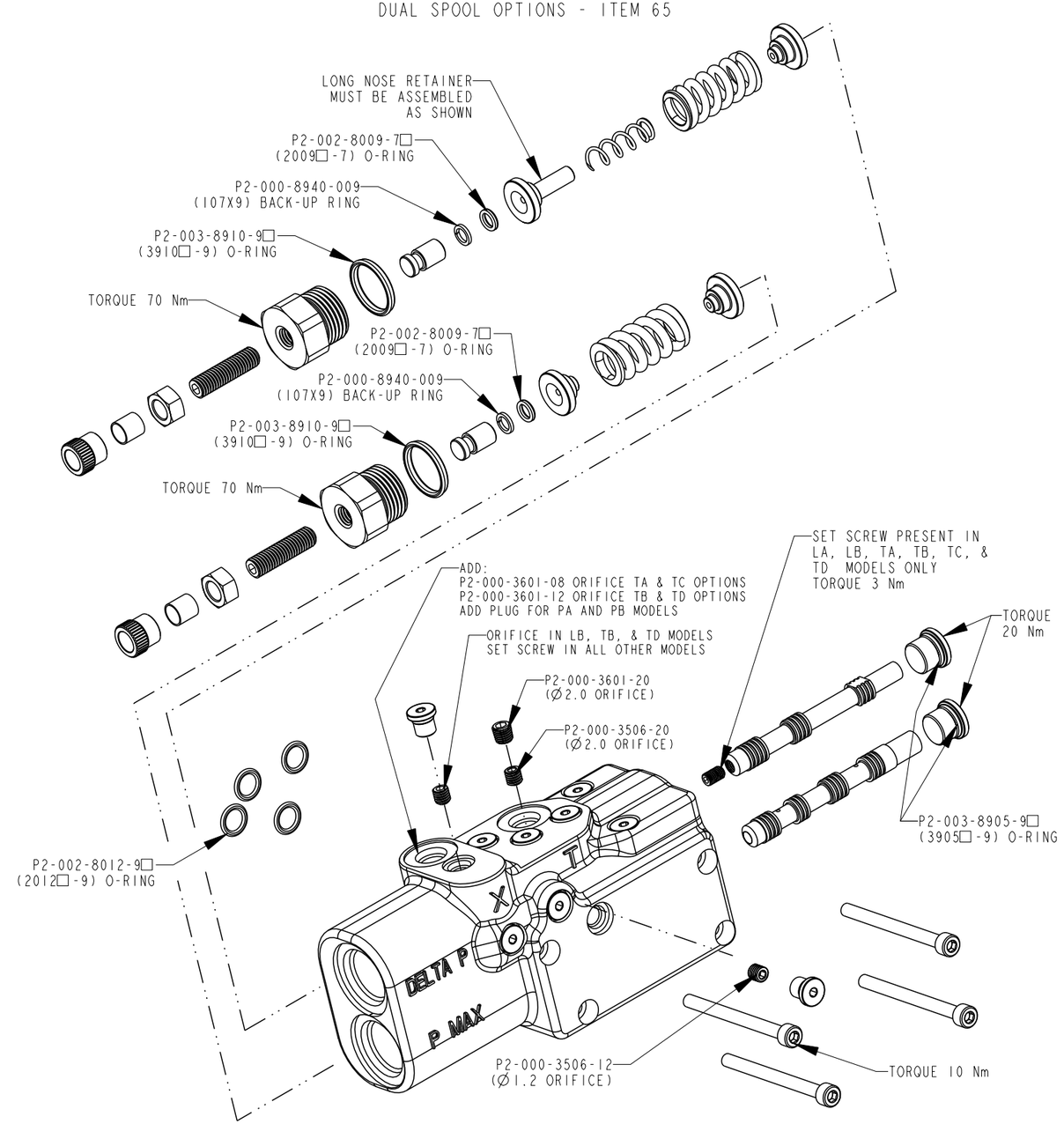

www.comoso.com

TITLE	DRAWING NUMBER	REVISION	STATUS	
SERVICE PARTS P3145 DESIGN SERIES 12	P2-145-0406	-	PR	SHEET 4 OF 7

DRAWN BY	DATE	CHANGED BY	DATE	ECN NUMBER
STREHLOW	31OCT02	B. LARKIN	08NOV02	133698

THRU DRIVE KITS

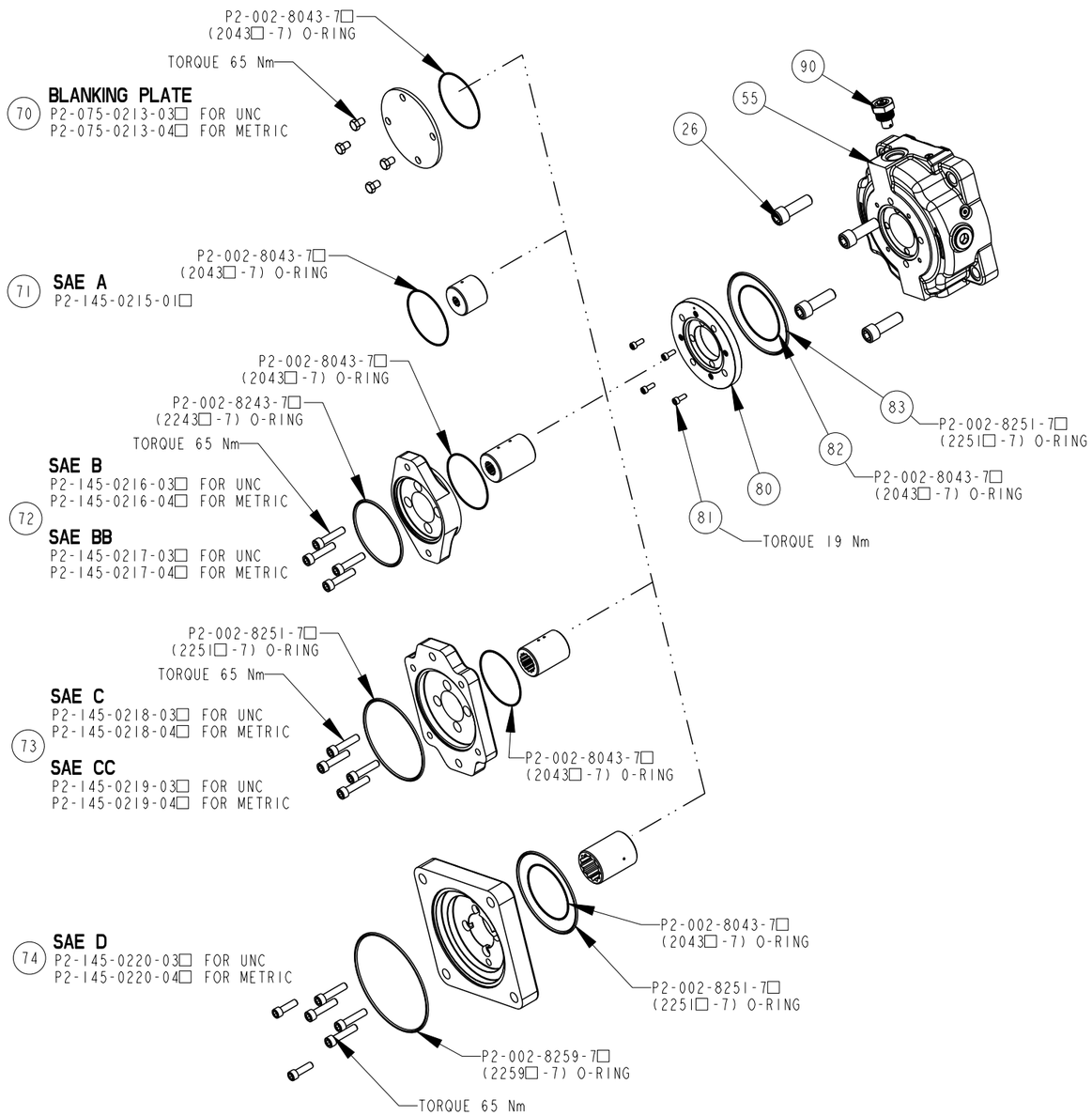

MAX VOLUME ASSEMBLY AND SERVO PISTON KIT

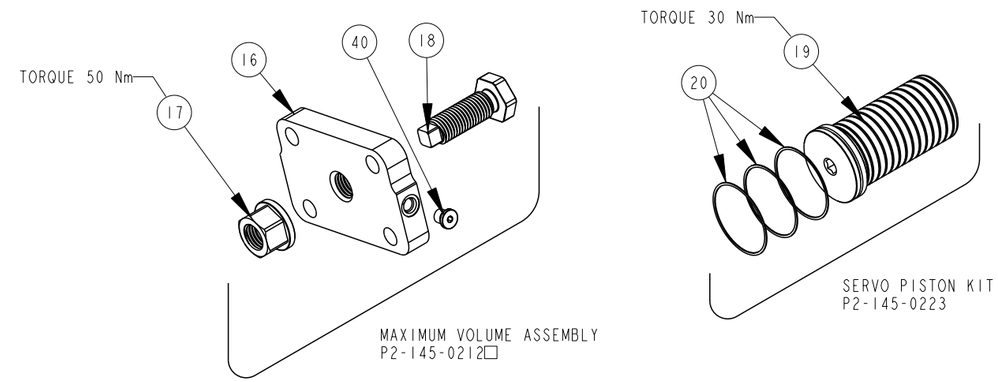

BARREL KIT AND ROTATION GROUP KIT

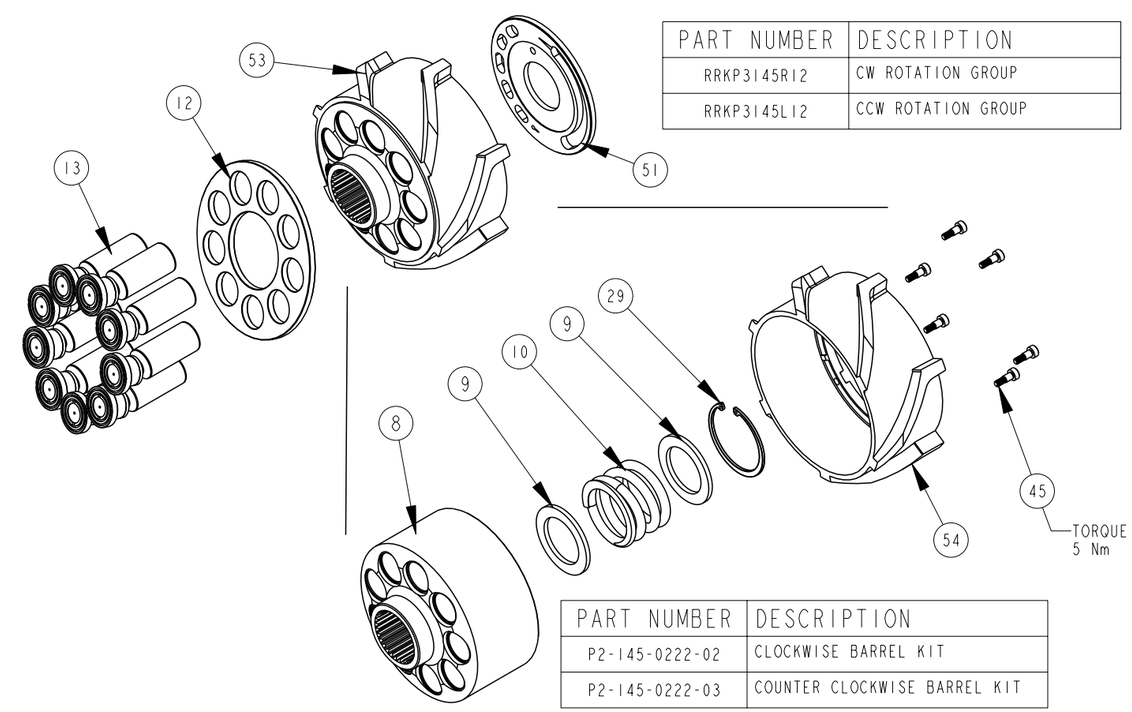

PART NUMBER	DESCRIPTION
RRKP3145R12	CW ROTATION GROUP
RRKP3145L12	CCW ROTATION GROUP

PART NUMBER	DESCRIPTION
P2-145-0222-02	CLOCKWISE BARREL KIT
P2-145-0222-03	COUNTER CLOCKWISE BARREL KIT

Parker Hannifin GmbH
Hydraulik Controls Division
Kaarst, Germany

Parker Hannifin Corporation
Hydraulic Pump/Motor Division
Greeneville, Tennessee

www.comoso.com

TITLE	DRAWING NUMBER	REVISION	STATUS	
SERVICE PARTS P3145 DESIGN SERIES 12	P2-145-0406	-	PR	SHEET 5 OF 7

SHAFT ASSEMBLY KITS

ITEM 57

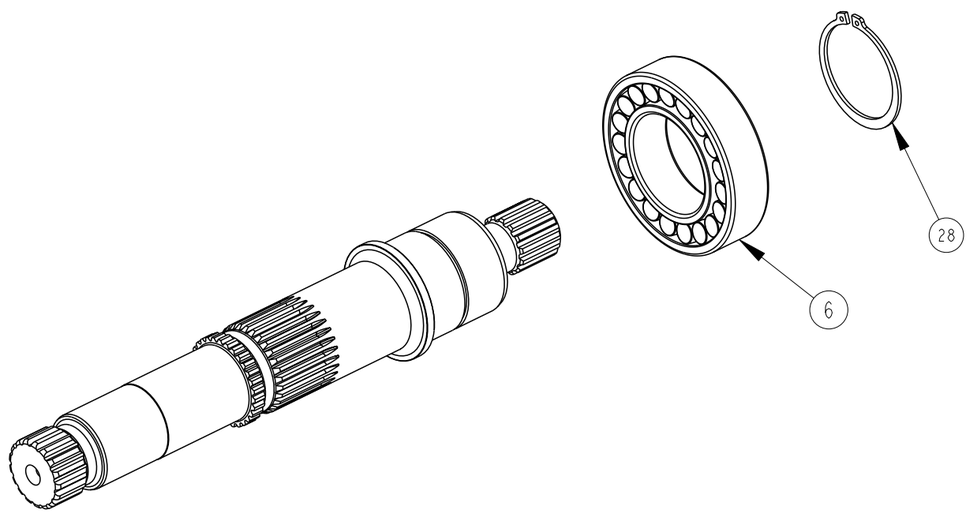

SHAFT ONLY	SHAFT ASSEMBLY	DESCRIPTION
P2-145-3725	P2-145-0238-36	C SPLINE THRU
P2-145-3719	P2-145-0238-40	D SPLINE THRU
P2-145-3733	P2-145-0238-46	C KEY THRU
P2-145-3735	P2-145-0238-48	CC KEY THRU
P2-145-3737	P2-145-0238-50	D KEY THRU
P2-145-3720	P2-145-0238-56	C SPLINE THRU NO UNDERCUT
P2-145-3746	P2-145-0238-60	D SPLINE THRU NO UNDERCUT

DRAWN BY	DATE	CHANGED BY	DATE	ECN NUMBER
STREHLOW	31OCT02	B. LARKIN	08NOV02	133698

COVER ASSEMBLY KITS

ITEM 55

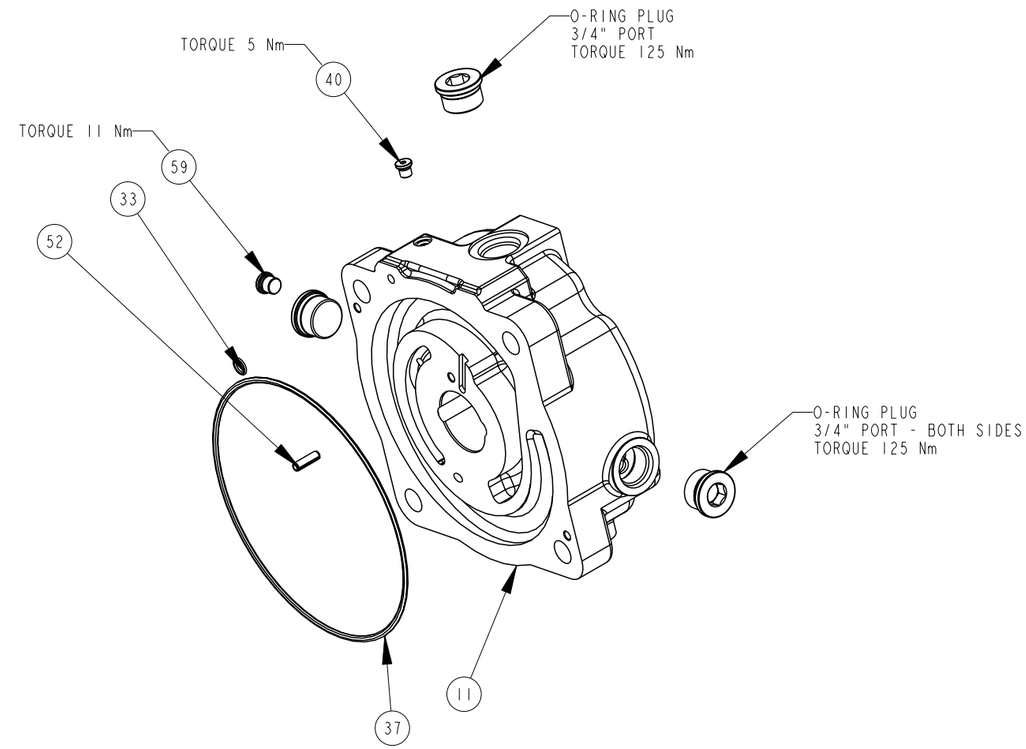

COVER ONLY	COVER ASSEMBLY	DESCRIPTION
P2-145-1015-01	P2-145-0226-09□	SIDE PORT, CCW, UNC
P2-145-1015-02	P2-145-0226-10□	SIDE PORT, CCW, UNC, THRU
P2-145-1015-03	P2-145-0226-11□	SIDE PORT, CCW, METRIC
P2-145-1015-04	P2-145-0226-12□	SIDE PORT, CCW, METRIC, THRU
P2-145-1016-01	P2-145-0226-13□	SIDE PORT, CW, UNC
P2-145-1016-02	P2-145-0226-14□	SIDE PORT, CW, UNC, THRU
P2-145-1016-03	P2-145-0226-15□	SIDE PORT, CW, METRIC
P2-145-1016-04	P2-145-0226-16□	SIDE PORT, CW, METRIC, THRU

www.comoso.com

TORQUE CONTROL CARTRIDGE

P2-000-0803 □ - ITEM 63

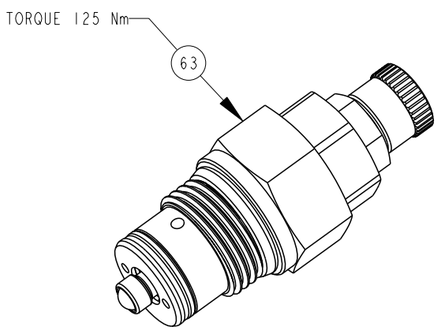

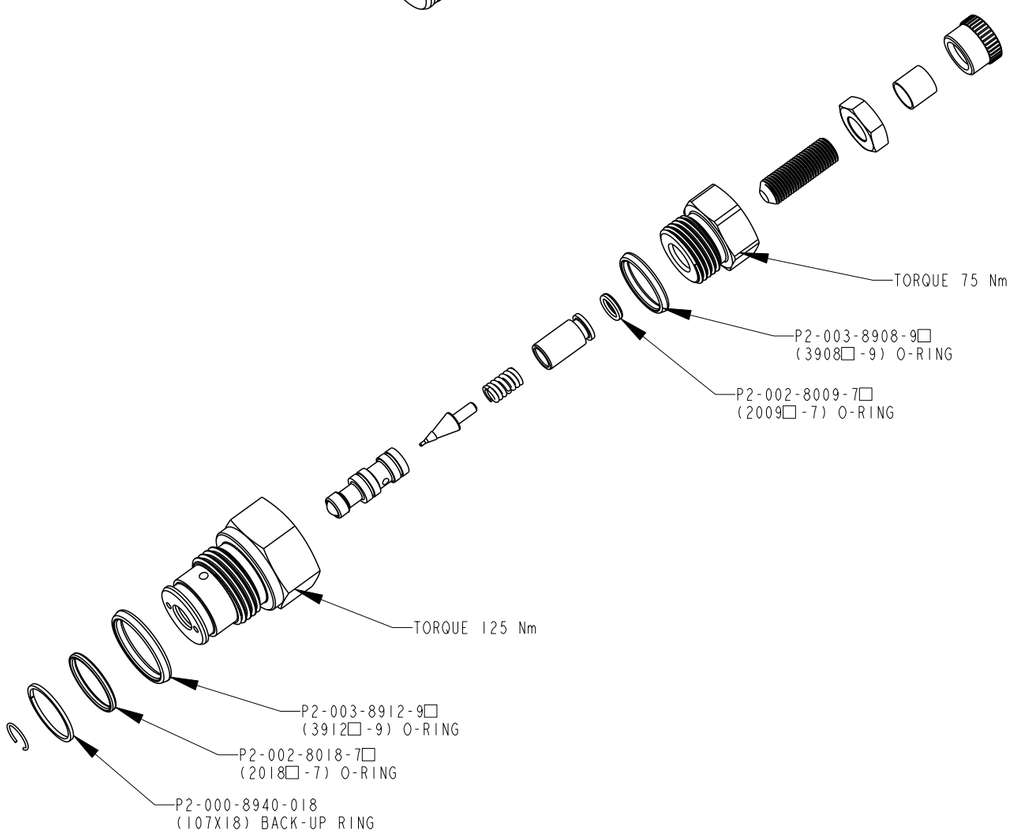

ASSEMBLY, DIS-ASSEMBLY AND REPAIR NOTES

DISASSEMBLY STEPS FOR ENTIRE PUMP

1. REMOVE COVER SCREWS AND COVER
2. REMOVE IMPELLER SCREWS AND IMPELLER
3. DE-STROKE PUMP TO MINIMUM ANGLE WITH MAX VOLUME SCREW
4. REMOVE FIXED CLEARANCE HOLD DOWN SCREWS AND HOLD DOWN PARTS
5. REMOVE ROTATING GROUP (BARREL, SLIPPER RETAINER AND PISTONS)
6. REMOVE SHAFT SEAL CARRIER
7. REMOVE SHAFT
8. REMOVE BIAS SPRING PLUG, SPRING AND RETAINER
9. REMOVE MAX. VOLUME ASSY
10. REMOVE SERVO PISTON ASSY.
11. REMOVE SWASHPLATE ASSEMBLY

SHAFT SEAL REPLACEMENT

1. REMOVE SEAL CARRIER ONLY
2. REMOVE OLD SEAL
3. INSPECT SHAFT
4. IF SHAFT IS WORN INSTALL NEW SEAL IN INNER LOCATION FOR SINGLE SEAL APPLICATIONS (SEE SHEET 1). REPLACE SHAFT FOR DUAL SEAL APPLICATIONS

Parker Hannifin GmbH
Hydraulik Controls Division
Kaarst, Germany

Parker Hannifin Corporation
Hydraulic Pump/Motor Division
Greeneville, Tennessee

www.comoso.com

TITLE	DRAWING NUMBER	REVISION	STATUS	
SERVICE PARTS P3145 DESIGN SERIES 12	P2-145-0406	-	PR	SHEET 7 OF 7

DRAWN BY	DATE	CHANGED BY	DATE	ECN NUMBER
STREHLOW	31OCT02	B. LARKIN	08NOV02	133698

P3 — DISPLACEMENT — ROTATION — % DISPLACEMENT — SHAFT — MOUNTING PILOT — MAX PRESSURE SETTING

00				FULL STROKE - 100%
70				MINIMUM ADJUSTMENT
99				MAXIMUM ADJUSTMENT

	ITEM	PART NUMBER	QTY	DESCRIPTION	HPM PART
R	50	P2-145-0221-02	1	SWASHPLATE ASSY - CW	
	51	P2-145-2402	1	PORT PLATE CW	
	52	P2-000-8606-20	1	ROLL PIN - 6X20	299X124
	53	P2-145-0222-02	1	BARREL ASSEMBLY - CW	
	54	P2-145-1101	1	IMPELLER RING - CW	
L	50	P2-145-0221-03	1	SWASHPLATE ASSY - CCW	
	51	P2-145-2404	1	PORT PLATE CCW	
	52	P2-000-8604-20	1	ROLL PIN - 4X20	299X71
	53	P2-145-0222-03	1	BARREL ASSEMBLY - CCW	
	54	P2-145-1103	1	IMPELLER RING - CCW	

				MAX PRESSURE SETTING
03				MINIMUM ADJUSTMENT - PB
21				MAXIMUM ADJUSTMENT - PB
10				MIN ADJUSTMENT - ALL OTHER
32				MAX ADJUSTMENT - ALL OTHER

1	P2-000-3400	2	STEPPED PIN			
2	P2-145-3200	2	SADDLE BEARING			
3	P2-145-5003	1	SPRING GUIDE			
4	P2-145-3000	1	SERVO SPRING			
5	P2-145-0209□	1	SPRING PLUG ASSY			
6	P2-105-3203	1	SPHERICAL BEARING			
7	P2-105-5010	1	BEARING RING			
8	P2-145-0214	1	BARREL			
9	P2-145-3102	2	WASHER			
10	P2-145-3001	1	BARREL SPRING			
11	P2-145-3202	1	BUSHING			
12	P2-145-2400	1	SLIPPER RETAINER			
13	P2-145-0201	9	PISTON ASSY			
14	P2-145-3407	2	SWASHPLATE RETAINING PIN			
15	P2-145-3925	2	FIXED CLEARANCE HOLD DOWN			
16	P2-145-3928	1	SERVO PISTON COVER			
17	P2-000-8950-16	1	SEAL LOCKNUT - M16			
18	P2-145-3101	1	MAX VOL STOP			
19	P2-145-5008	1	SERVO PISTON			
20	P2-145-3303	3	PISTON RINGS			
21	P2-145-3902	1	CHAIN LINK			
22	P2-000-3900	1	NAMEPLATE			
23	P2-000-3101	4	DRIVE SCREW	39X10		
24	P2-000-8006-30	4	SHCS M6X30	210X134		
25	P2-000-8010-30	4	SHCS M10X30	210X208		
26	P2-000-8016-50	4	SHCS M16X50	210X283		
27	P2-000-8606-20	2	ROLL PIN - 6X20	299X124		
28	P2-000-8900-055	1	SNAP RING - EXT 55MM	256X248		
29	P2-000-8910-065	1	SNAP RING - INT 65MM	256X555		
30	P2-000-8910-072	1	SNAP RING - INT 72MM	256X559		
31	P2-000-8910-100	1	SNAP RING - INT 100MM	256X575		
32	P2-000-8910-108	1	SNAP RING - INT 108MM	256X579		
33	P2-002-8012-9□	2	O-RING	2012 □-9		
34	P2-002-8138-9□	1	O-RING	2138 □-9		
35	P2-002-8044-7□	1	O-RING	2044 □-7		
36	P2-002-8240-7□	1	O-RING	2240 □-7		
37	P2-002-8264-7□	1	O-RING	2264 □-7		
38	P2-003-8906-9□	2	O-RING	3906 □-9		
39	P2-003-8920-9□	1	O-RING	3920 □-9		
40	P2-000-8960-02□	3	SAE-2 PLUG	108X2□		
41	P2-105-3300	1	SHAFT SEAL - NITRILE			
41	P2-105-3304	1	SHAFT SEAL - FLOUROCARBON			
42	P2-145-0212□	1	MAX. VOLUME ASSY			
43	P2-145-0223	1	SERVO PISTON ASSY			
44	P2-000-8960-04□	1	SAE-4 PLUG	108X4□		
45	P2-000-3115	6	M5 SHOULDER BOLT			

1 — 4 — 5

C	NV	A	60	P2-145-1008-18	1	HOUSING
		B	60	P2-145-1008-20	1	HOUSING
	DT	A	60	P2-145-1008-22	1	HOUSING
		B	60	P2-145-1008-24	1	HOUSING
D	NV	A	60	P2-145-1008-02	1	HOUSING
		B	60	P2-145-1008-04	1	HOUSING
	DT	A	60	P2-145-1008-06	1	HOUSING
		B	60	P2-145-1008-08	1	HOUSING

A	59	P2-000-8960-04□	1	SAE-4 PLUG	108X4□
B	59	P2-000-8964-04□	1	ISO-6149-04 PLUG	788516-04□

C1	57	P2-145-0238-36	1	SHAFT ASSY - C SPLINE	
C3	57	P2-145-0238-56	1	SHAFT ASSY - C SPLINE - NO U'CUT	
C5	57	P2-145-0238-46	1	SHAFT ASSY - C KEY	
	58	P2-000-8855-20	1	SQUARE KEY	22X83
C6	57	P2-145-0238-48	1	SHAFT ASSY - CC KEY	
	58	P2-000-8856-24	1	SQUARE KEY	22X97
D1	57	P2-145-0238-40	1	SHAFT ASSY - D SPLINE	
D2	57	P2-145-0238-60	1	SHAFT ASSY - D SPLINE - NO U'CUT	
D3	57	P2-145-0238-50	1	SHAFT ASSY - D KEY	
	58	P2-000-8847-24	1	SQUARE KEY	800332

R	A	S1	55	P2-145-0226-13□	1	REAR COVER ASSY
		NOT S1	55	P2-145-0226-14□	1	REAR COVER ASSY
	B	S1	55	P2-145-0226-15□	1	REAR COVER ASSY
		NOT S1	55	P2-145-0226-16□	1	REAR COVER ASSY
L	A	S1	55	P2-145-0226-09□	1	REAR COVER ASSY
		NOT S1	55	P2-145-0226-10□	1	REAR COVER ASSY
	B	S1	55	P2-145-0226-11□	1	REAR COVER ASSY
		NOT S1	55	P2-145-0226-12□	1	REAR COVER ASSY

A	90	P2-000-0200-01□	1	AIRBLEED ASSY
B	90	P2-000-0200-02□	1	AIRBLEED ASSY

CONTROLS — DIFFERENTIAL SETTING — SEALS / SHAFT SEAL — TORQUE SETTING — THRU-SHAFT — PORT LOCAT/THREADS — PAINT/SPECIAL MOD. — MULTI-PUMP CONFIG

00	68	P2-145-5001	1	LINK PISTON
20-60	68	P2-145-5001	1	LINK PISTON - 20-60% RANGE
50-90	68	P2-145-5022	1	LINK PISTON - 50-90% RANGE

N	67	P2-105-0210-01N	1	SINGLE SEAL ASSY - NITRILE
D	67	P2-105-0210-02N	1	DUAL SEAL ASSY - NITRILE
V	67	P2-105-0210-01V	1	SINGLE SEAL ASSY - FLOUROCARBON
T	67	P2-105-0210-02V	1	DUAL SEAL ASSY - FLOUROCARBON

00				NO DIFFERENTIAL SETTING
10				MINIMUM ADJUSTMENT
35				MAXIMUM ADJUSTMENT

PA	A	65	P2-145-0807-07□	1	COMPENSATOR ASS'Y
	B	65	P2-145-0807-08□	1	COMPENSATOR ASS'Y
PB	A	65	P2-145-0807-09□	1	COMPENSATOR ASS'Y
	B	65	P2-145-0807-10□	1	COMPENSATOR ASS'Y
RA	A	65	P2-145-0807-05□	1	COMPENSATOR ASS'Y
	B	65	P2-145-0807-06□	1	COMPENSATOR ASS'Y
RC	A	64	P2-145-0805-03□	1	COMPENSATOR ASS'Y
	B	64	P2-145-0805-04□	1	COMPENSATOR ASS'Y
LA	A	65	P2-145-0807-01□	1	COMPENSATOR ASS'Y
	B	65	P2-145-0807-02□	1	COMPENSATOR ASS'Y
LB	A	65	P2-145-0807-03□	1	COMPENSATOR ASS'Y
	B	65	P2-145-0807-04□	1	COMPENSATOR ASS'Y
LC	A	64	P2-145-0805-01□	1	COMPENSATOR ASS'Y
	B	64	P2-145-0805-02□	1	COMPENSATOR ASS'Y
TA TC	A	65	P2-145-0807-11□	1	COMPENSATOR ASS'Y
	B	65	P2-145-0807-12□	1	COMPENSATOR ASS'Y
TB TD	A	65	P2-145-0807-13□	1	COMPENSATOR ASS'Y
	B	65	P2-145-0807-14□	1	COMPENSATOR ASS'Y
TE TF	A	65	P2-145-0807-05□	1	COMPENSATOR ASS'Y
	B	65	P2-145-0807-06□	1	COMPENSATOR ASS'Y
TG TH	A	64	P2-145-0805-01□	1	COMPENSATOR ASS'Y
	B	64	P2-145-0805-02□	1	COMPENSATOR ASS'Y
TJ TK	A	64	P2-145-0805-03□	1	COMPENSATOR ASS'Y
	B	64	P2-145-0805-04□	1	COMPENSATOR ASS'Y
TL TM	A	65	P2-145-0807-07□	1	COMPENSATOR ASS'Y
	B	65	P2-145-0807-08□	1	COMPENSATOR ASS'Y
TN TP	A	64	P2-145-0805-05□	1	COMPENSATOR ASS'Y
	B	64	P2-145-0805-06□	1	COMPENSATOR ASS'Y

NOT T*	61	P2-000-8406-06	1	M6X6 SET SCREW	226X56
	62	P2-000-8960-12□	1	SAE-12 PLUG	108X12
T*	63	P2-000-0803 □	1	TORQUE CONTROL ASSY	
			-1	REMOVE M6X6 SET SCREW	

1				SINGLE PUMP
2				FRONT PUMP OF MULTIPLE PUMP
3				MIDDLE PUMP OF MULTIPLE PUMP
4				REAR PUMP OF MUTIPLE PUMP

U				PUMP UNPAINTED
P				PAINTED BLACK

T1	A	70	P2-075-0213-01□	1	COVER KIT - UNC
	B	70	P2-075-0213-02□	1	COVER KIT - METRIC
A1	A	71	P2-145-0215-01□	1	SAE A THRU KIT UNC
	B	71	P2-145-0215-02□	1	SAE A THRU KIT METRIC
B1	A	72	P2-145-0216-01□	1	SAE B THRU KIT UNC
	B	72	P2-145-0216-02□	1	SAE B THRU KIT METRIC
B2	A	72	P2-145-0217-01□	1	SAE BB THRU KIT UNC
	B	72	P2-145-0217-02□	1	SAE BB THRU KIT METRIC
C1 C3	A	73	P2-145-0218-01□	1	SAE C THRU KIT UNC
	B	73	P2-145-0218-02□	1	SAE C THRU KIT METRIC
C2 C4	A	73	P2-145-0219-01□	1	SAE CC THRU KIT UNC
	B	73	P2-145-0219-02□	1	SAE CC THRU KIT METRIC
D3	A	74	P2-145-0220-01□	1	SAE D THRU KIT UNC
	B	74	P2-145-0220-02□	1	SAE D THRU KIT METRIC

T1 THRU D3	A	80	P2-145-5019-01	1	P3 SPACER RING - UNC	
		81	P2-000-8006-16	4	CAP SCREW - M6X16	210X129
		82	P2-002-8043-7□	1	O-RING	2043□-7
		83	P2-002-8251-7□	1	O-RING	2251□-7
	B	80	P2-145-5019-02	1	P3 SPACER RING - METRIC	
		81	P2-000-8006-16	4	CAP SCREW - M6X16	210X129
		82	P2-002-8043-7□	1	O-RING	2043□-7
		83	P2-002-8251-7□	1	O-RING	2251□-7

REPLACE □ SYMBOL WITH
"N" FOR NITRILE SEALS AND
"V" FOR FLOUROCARBON SEALS

OTHER AVAILABLE KITS

PART NUMBER	DESCRIPTION
SKP2/P3145□12	SEAL KIT
P2-145-0211	PISTON/SLIPPER KIT (FULL SET)

Parker Hannifin GmbH
Hydraulik Controls Division
Kaarst, Germany

Parker Hannifin Corporation
Hydraulic Pump/Motor Division
Greeneville, Tennessee

www.comoso.com

Parker Hannifin GmbH
Hydraulik Controls Division
Kaarst, Germany

Parker Hannifin Corporation
Hydraulic Pump/Motor Division
Greeneville, Tennessee