Parker Pneumatic

Pneumatic cylinders

Rodless cylinders
Serie P1R

Catalogue 2178GB-3-pon

www.comoso.com

Home

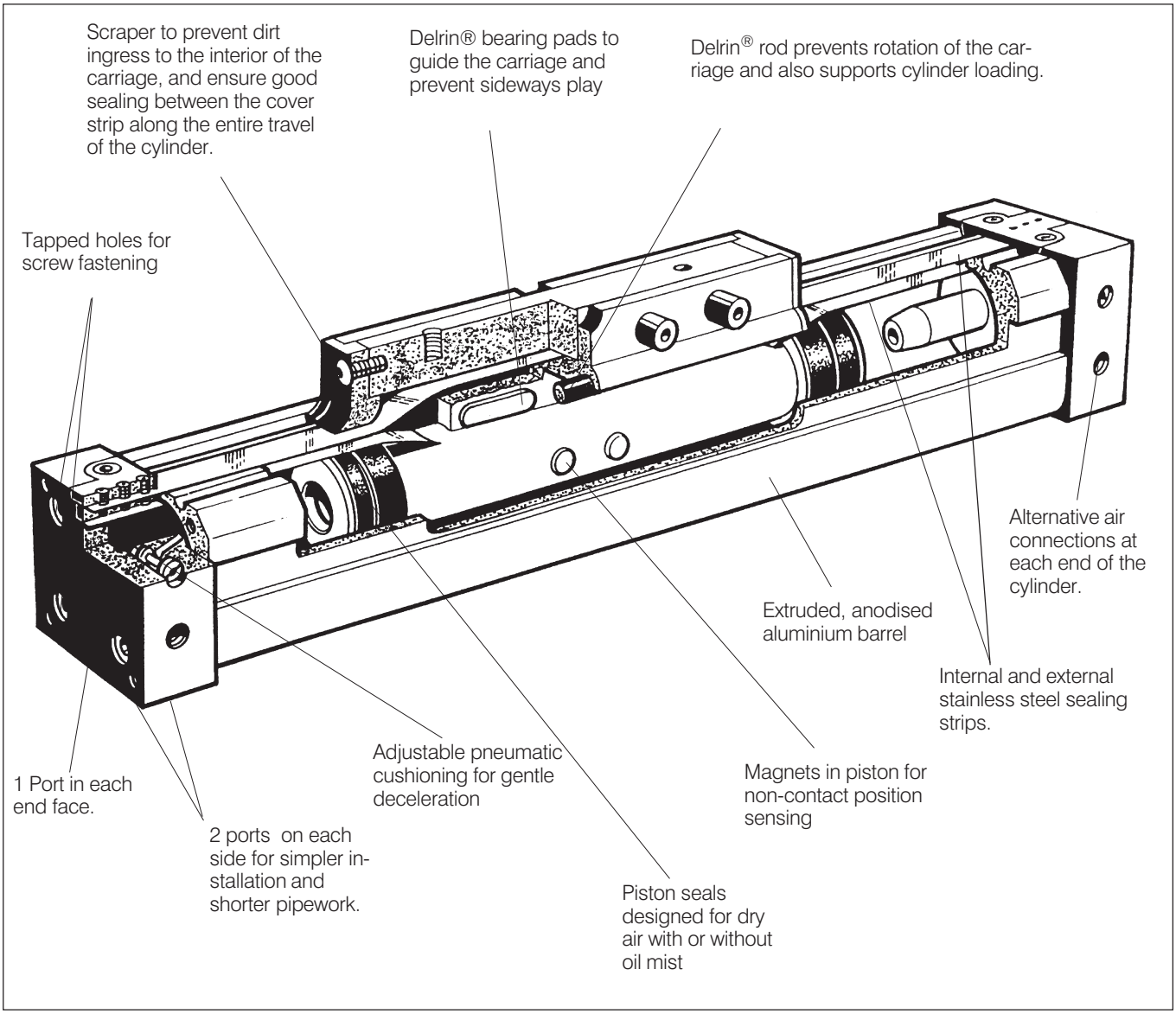

Rodless cylinders, Ø 16, 25, 32, 40, 50 and 63 mm

- **Compact installation**
  Parker rodless cylinders are particularly suitable for compact installation, in a restricted space. Thanks to new design principles, the overall length has been reduced to a minimum, about half compared with a conventional cylinder.

- **Efficient technology**
  Sealing at the edge of the extrusion is assured by two specially profiled strips (stainless steel foil).

- **Rigidity**
  The Delrin® bearing pads , the carriage, permit greater torque to be exerted and greater loads to be transmitted

- **Longer service life**
  Lubricated for life on assembly, Parker rodless cylinders do not need any maintenance or lubrication whatsoever.

- **Pneumatic cushioning**
  Parker rodless cylinders use pneumatic cushioning. This is ajustable to suit the loads transmitted and the speeds achieved, allowing greater permissible loading.
  Shock absorbing seals also permit faster deceleration.

- **Simple use**
  All air supplies may be connected at one end, to facilitate installation. However, for higher speed, the rodless cylinder can be supplied by one pipe at each end either on the side or on the end face.

- **Electronic or magnetic position sensing**
  Position sensing is possible along the entire piston travel by means of electronic detectors or magnetic sensors.

Single carriage

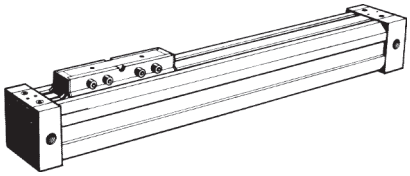

Double carriage

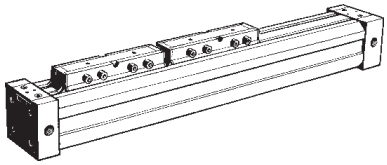

Single T-carriage

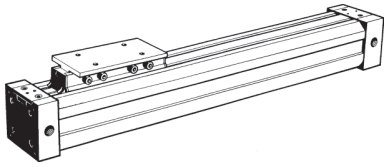

Double T-carriage

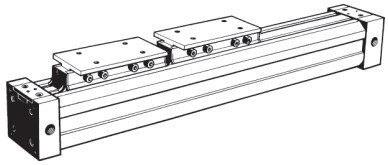

Single cantilever carriage

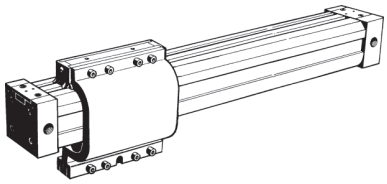

Double cantilever carriage

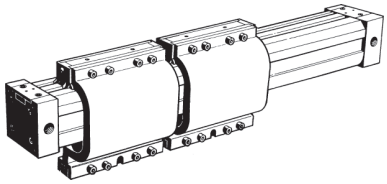

Single cantilever T-carriage

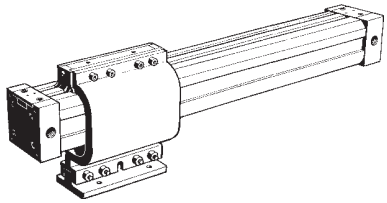

Double cantilever T-carriage

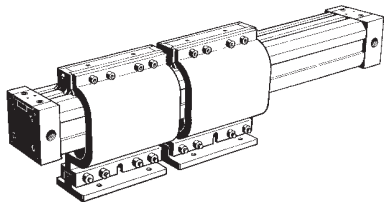

Single articulated carriage

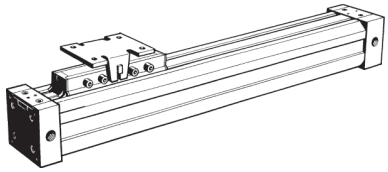

Single articulated cantilever carriage

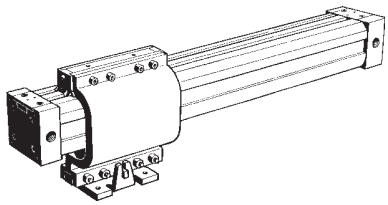

Main data

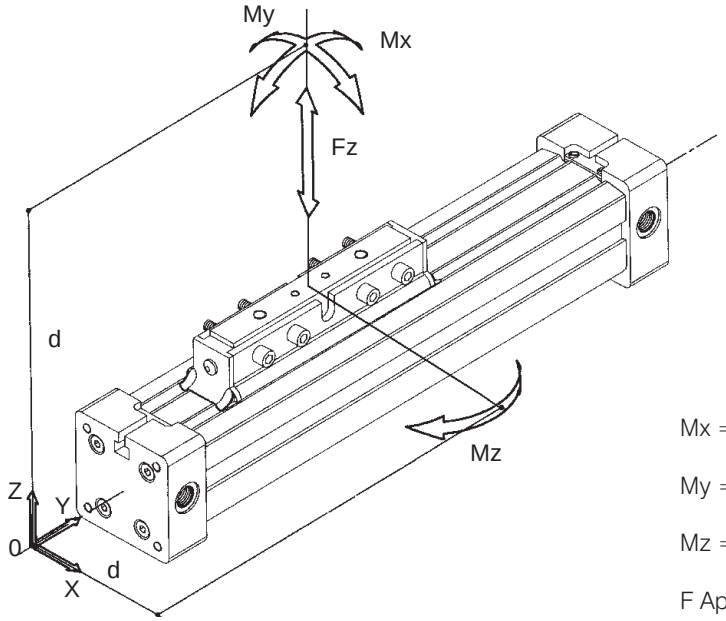

Mx = F.d

My = F.d

Mz = F.d

F Apply according to X, Y, Z.

Diameter (mm)			16	25	32	40	50	63
Stroke mini (mm)			100					
Stroke max (mm) single carriage			5700	7100		7000	4000	6900
Stroke max (mm) double carriage			5600	7000	6900	6800	3700	6600
Load max (Kg)	Single carriage	Horizontal alignment carriage upwards* |Fz|	12	30	45	75	120	165
		Horizontal alignment carriage downwards* |Fz|	6	15	23	37	60	83
	Double carriage	Horizontal alignment carriage upwards* |Fz|	24	60	90	150	240	330
		Horizontal alignment carriage downwards* |Fz|	12	30	45	75	120	165
Torque max (Nm)	Single carriage	Transverse, single carriage |Mz|	0,5	3	5	8	15	24
		Sideways, single carriage |My|	0,3	1	2	4	7	8
		Lengthways, single carriage |Mx|	4	15	30	60	115	200
	Double carriage	Transverse, single carriage |Mz|	See diagram, page 7					
		Sideways, single carriage |My|	0,6	2	4	8	14	16
		Lengthways, single carriage |Mx|	See diagram, page 7					
Thrust (N) * |Fy|			110	250	420	640	1000	1550
Working pressure range (bar)			2 to 8					
Air consumption (dm^3)* for 100 mm stroke			0,14	0,34	0,55	0,87	1,36	2,16
Cushioning distance(mm)			15	21	26	32	32	40
Port size (each end)			M5	G1/8	G1/4	G1/4	G3/8	G3/8
Port size (single end)			—	G1/8 G1/8	G1/8 G1/4	G1/8 G1/4	G3/8 G1/4	G3/8 G3/8
Service life (km)			6000					
Working temperature range (°C)			from -10 à + 70					
Weight (Kg) Single carr.		Stroke 0 mm	0,4	1	2	3,6	5	9
Weight (Kg) Double carr.		Stroke 0 mm	0,6	1,6	2,9	4,9	8,2	13,2
		Per 100 mm stroke	0,1	0,27	0,4	0,6	0,86	1,02

* at 6 bar working pressure

The chart shows the admissible maxi values when operated in regular and smooth conditions.
Also those values should not be overstepped in dynamic area.
(Loads and torques shown refer to speeds < 0,2 m/s ;
the maxi service life is reached when the carriage speed is < 1 m/s).

General information

Cushioning	Pneumatic cushioning with screw adjustment	
Repeatability	0,03 mm	
Position sensing	Electronic detectors or sensors	
Visual indication of detection	LED ** on the body of the detector or sensor	
Carriage guide	Dia 16 and 25 mm Delrin® bearing pads	Dia 32 to 63 mm Delrin® bearing pads, Delrin® rod
Protection	Exterior stainless steel strip	
Sealing	Interior stainless steel strip	
Pneumatic connection***	One or both ends	
Function	Dry air, with or without oil mist	
Mounting	Foot, brackets on each end and centre supports dovetailed into the barrel	
Carriage fixation	Tapped or smooth holes, depending on the type of carriage chosen	

** Light Emitting Diode
*** Flow control valve not included

Option :

- Low speed version, 0,04 - 0,10 m/s

Tolerance on piston travel

Ø	Single carriage			Double carriage		
	<1000 mm	1001 à 5000 mm	>5001 mm	<1000 mm	1001 à 5000 mm	>5001 mm
16	0 +1,8	0 +2,3	0 +3,3	+0,4 +2,7	+0,4 +3,2	+0,4 +4,2
25	+0,5 +2,3	+0,5 +2,8	+0,5 +3,8	+0,6 +2,9	+0,6 +3,4	+0,6 +4,4
32	+0,2 +1,8	+0,2 +2,3	+0,2 +3,3	+0,2 +2,1	+0,2 +2,6	+0,2 +3,6
40	+0,3 +1,9	+0,3 +2,4	+0,3 +3,4	+0,4 +2,3	+0,4 +2,8	+0,4 +3,8
50	+0,2 +1,8	+0,2 +2,3	+0,2 +3,3	+0,4 +2,3	+0,4 +2,8	+0,4 +3,8
63	+0,2 +1,8	+0,2 +2,3	+0,2 +3,3	+0,2 +2,1	+0,2 +2,6	+0,2 +3,6

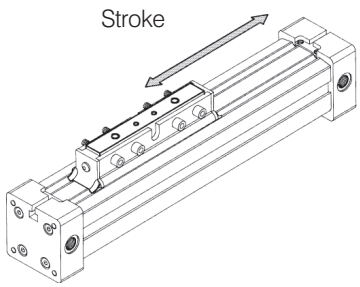

Tolerances on cylinder length (Single and double carriages)

Ø	< 1000 mm	1001 à 5000 mm	> 5001 mm
16 25 32 40 50 63	- 0,2 +0,7	- 0,2 +1,2	- 0,2 +2,2

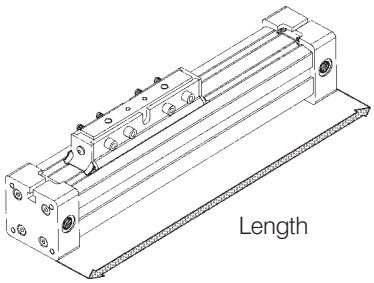

Thrust

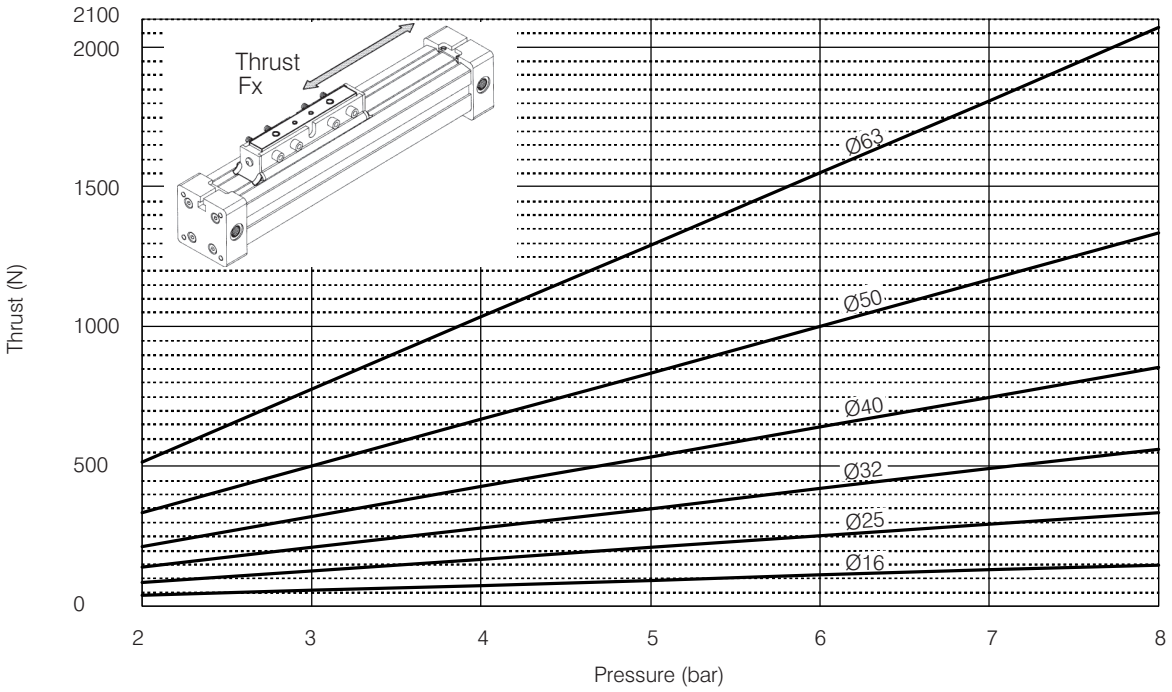

Cushioning capacity at end of stroke

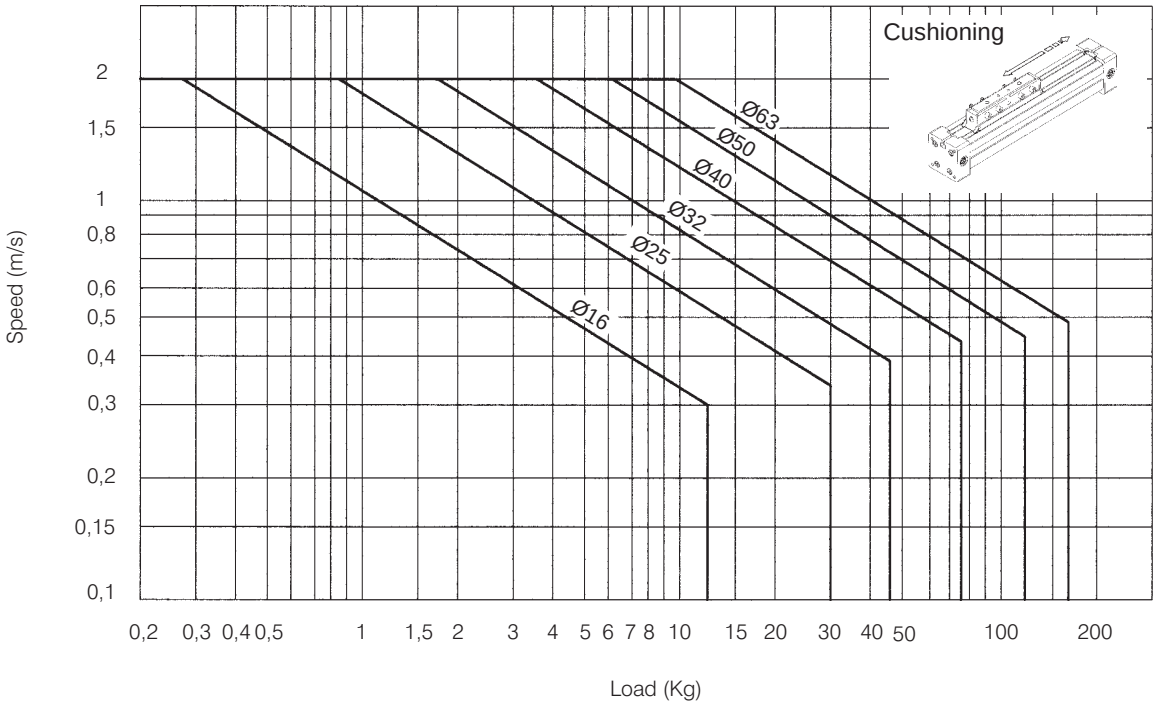

Transverse torque, double carriage

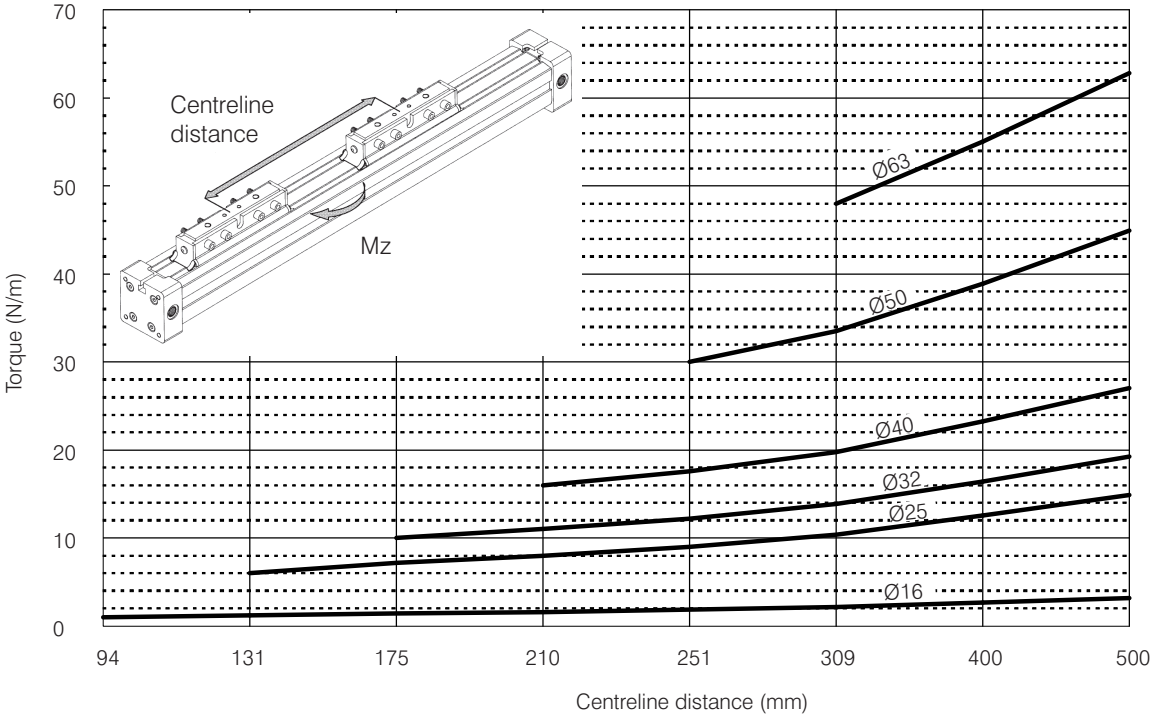

Lengthways torque double carriage

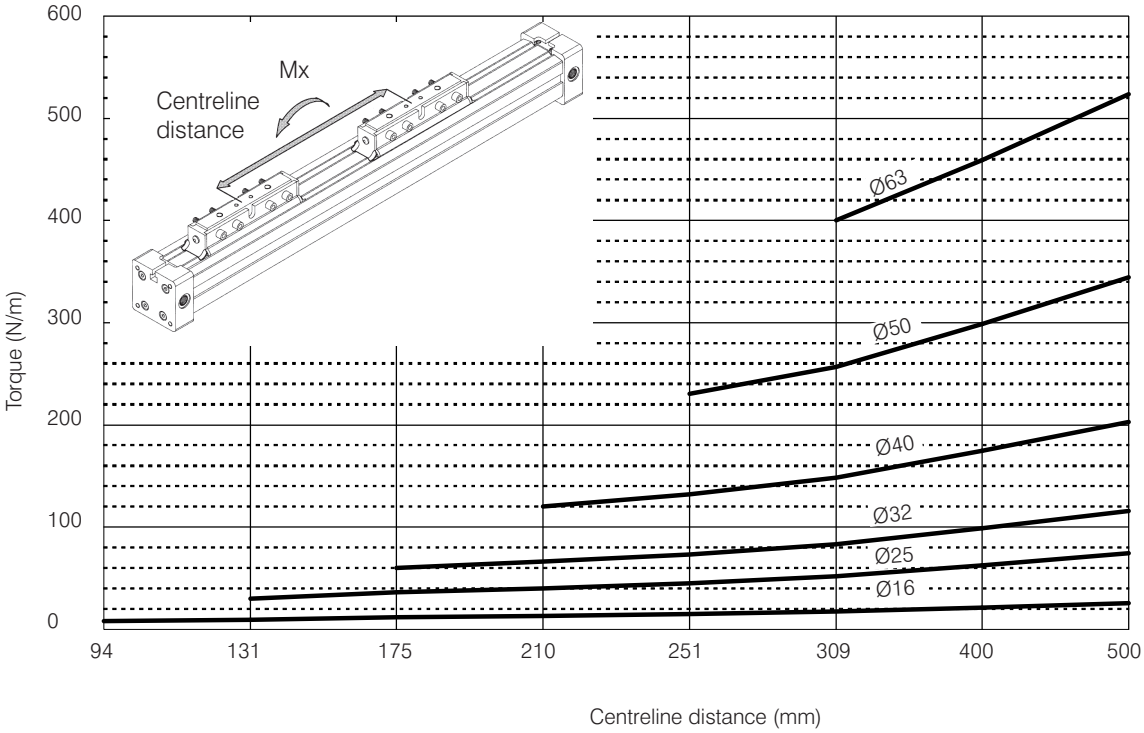

Single carriage
P1R-SXXXM0-XXXX

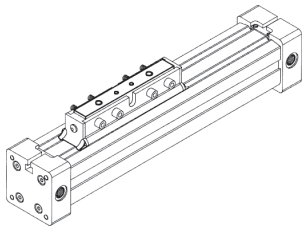

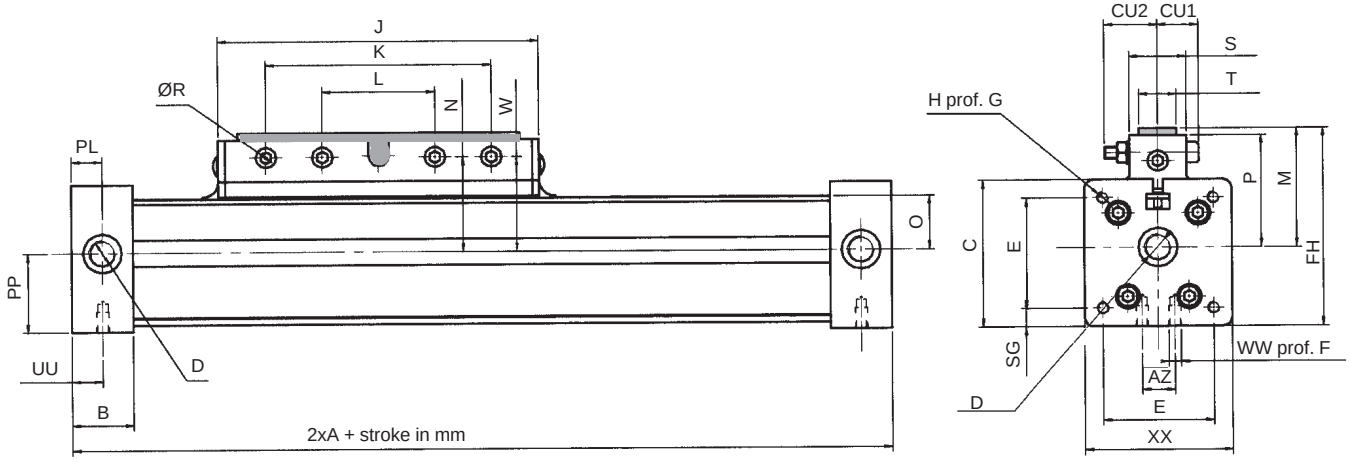

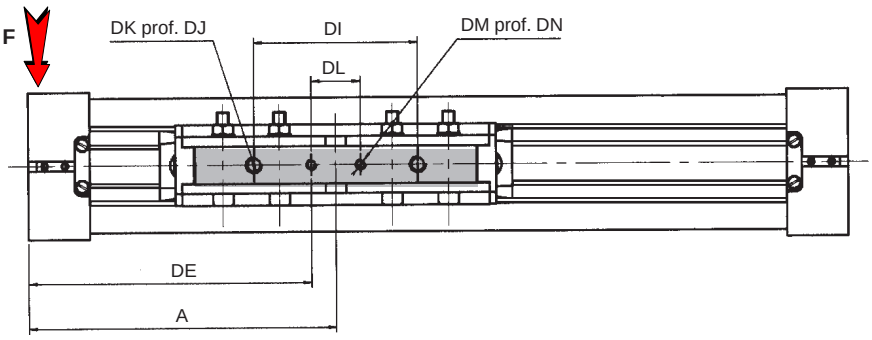

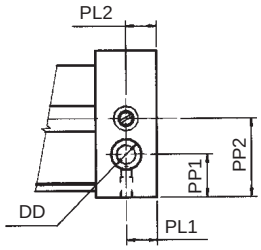

View "F"

Dimensions (mm)

Ø	A	AZ	B	C	CU1	CU2	D	DD	DE	DI	DJ	DK	DL	DM	DN	E	F	FH	G	H	J
16	65	-	15	26	13	16	M5	-	-	48	7	M4	-	-	-	17,5	-	43	6	M3	76
25	100,6	9,5	25	43	18	17	1/8	1/8	95	80	11	M5	24	M5	11	27	10	58	14	M5	127
32	125,9	16	25	54	22	24	1/4	1/8	114	120	13	M6	24	M5	13	36	12	75	14	M5	167
40	151	16	30	72	20	26	1/4	1/8	139	80	19	M8	24	M5	19	54	12	97	15	M6	157
50	170,2	16	32	78	25	28	3/8	1/4	-	160	17	M8	-	-	-	54	21	104	21	M8	219
63	215,1	16	38	106	23	30	3/8	3/8	-	140	22	M8	-	-	-	78	21	136	21	M8	227

Ø	K	L	M	N	O	P	PL	PL1	PL2	PP	PP1	PP2	ØR	S	SG	T	UU	W	WW	XX
16	64	32	29	23	11	28	6	-	12	13	-	17	5	18	5,9	10	-	23	-	32
25	50	25	36,5	30	16	36,5	15	15	15	21,5	14	26	6	26	6,5	15	14	31,5	M5	57
32	100	51	46	39	22,5	46	15	16	16	30	19	33	7	32	8	18	16	38	M6	57
40	110	55	58	46	26	55	15	15	15	39	21	39	7	28	9	18	15	46	M6	72
50	140	95	62	52	30	62	16	16	16	42	25	46	9	34	12	19	16	52	M8	86
63	180	90	76	61	39	71	19	19	19	60	28	60	9	30	15	19	19	61	M8	106

Double carriage
P1R-RXXXM0-XXXX

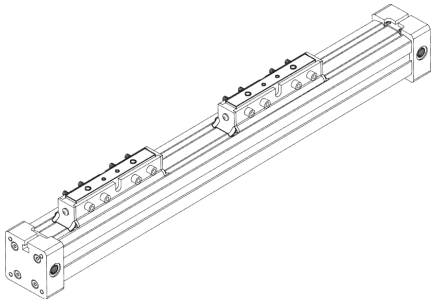

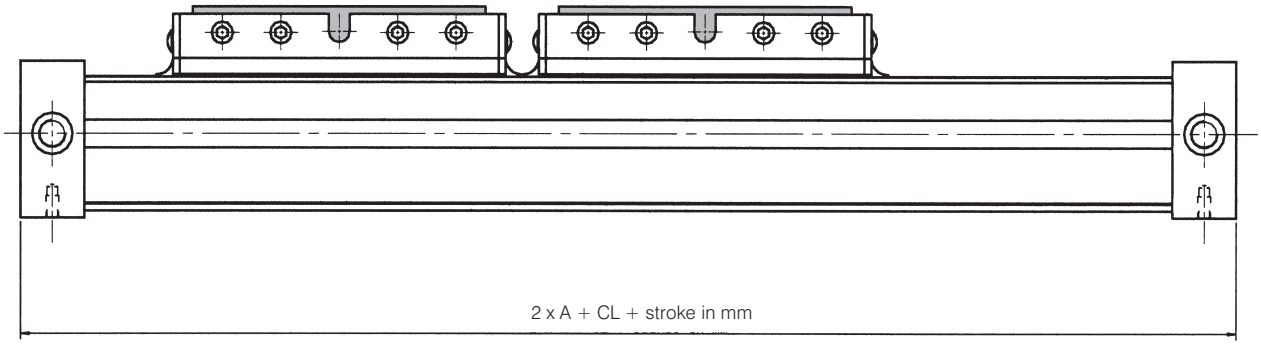

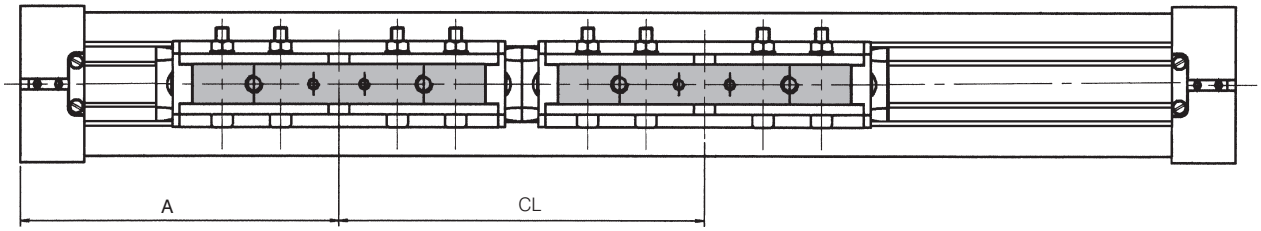

Dimensions (mm)

Ø	A	CL
16	65	94
25	100,6	131
32	125,9	175
40	151	210
50	170,2	251
63	215,1	309

Note:

Each carriage is independent, and the distance between them is determined by the application or to compensate for torques Mx and Mz.
The stroke and any increase in CL dimension should be added to the overall length of the cylinder.

Full dimensions see page 8.

Single T-carriage
P1R-SXXXMM-XXXX

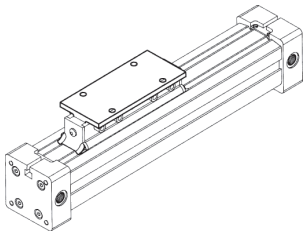

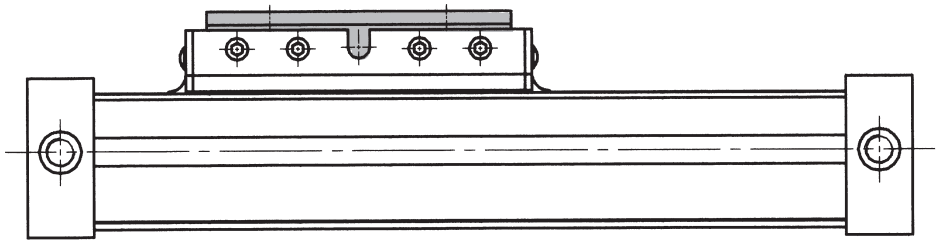

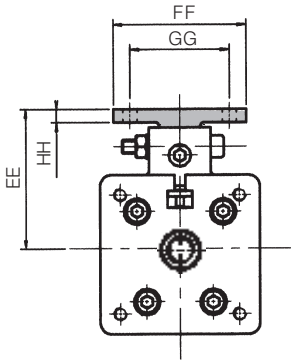

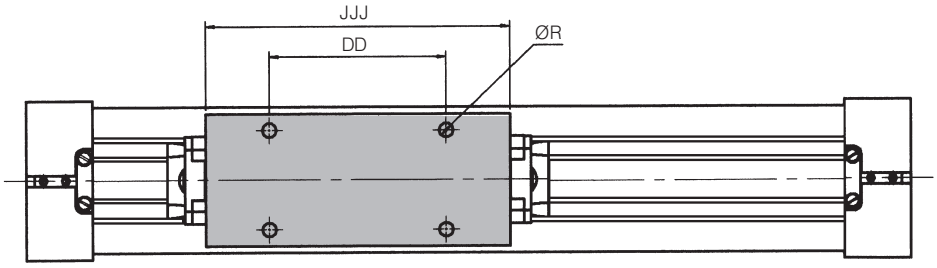

Dimensions (mm)

Ø	DD	EE	FF	GG	HH	JJJ	Ø R
25	76	43	51	38	5	109	5
32	114	54	63,5	48	5	149	6
40	80	63	60	45	6	139	6
50	130	74	80	60	7	201	8
63	130	83	80	60	7	209	8

Full dimensions see page 8.

Double T-carriage
P1R-RXXXMM-XXXX

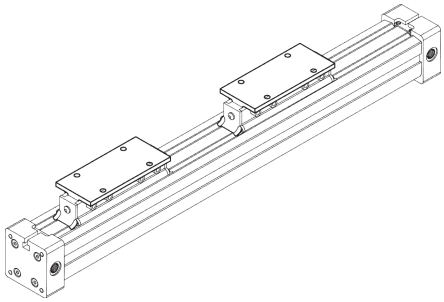

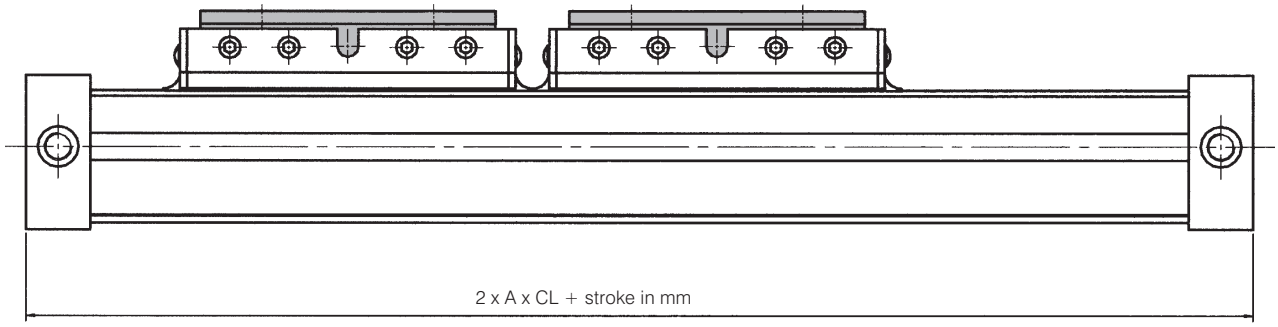

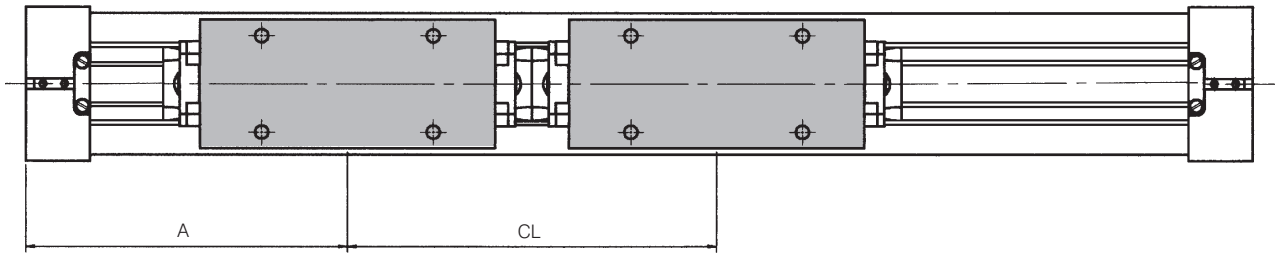

Dimensions (mm)

Ø	A	CL
25	100,6	131
32	125,9	175
40	151	210
50	170,2	251
63	215,1	309

Note:

Each carriage is independent, and the distance between them is determined by the application or to compensate for torques Mx and Mz.

The stroke and any increase in CL dimension should be added to the overall length of the cylinder.

Full dimensions see page 8.

Single cantilever carriage
P1R-SXXXMN-XXXX

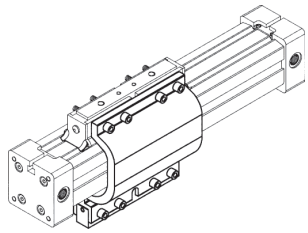

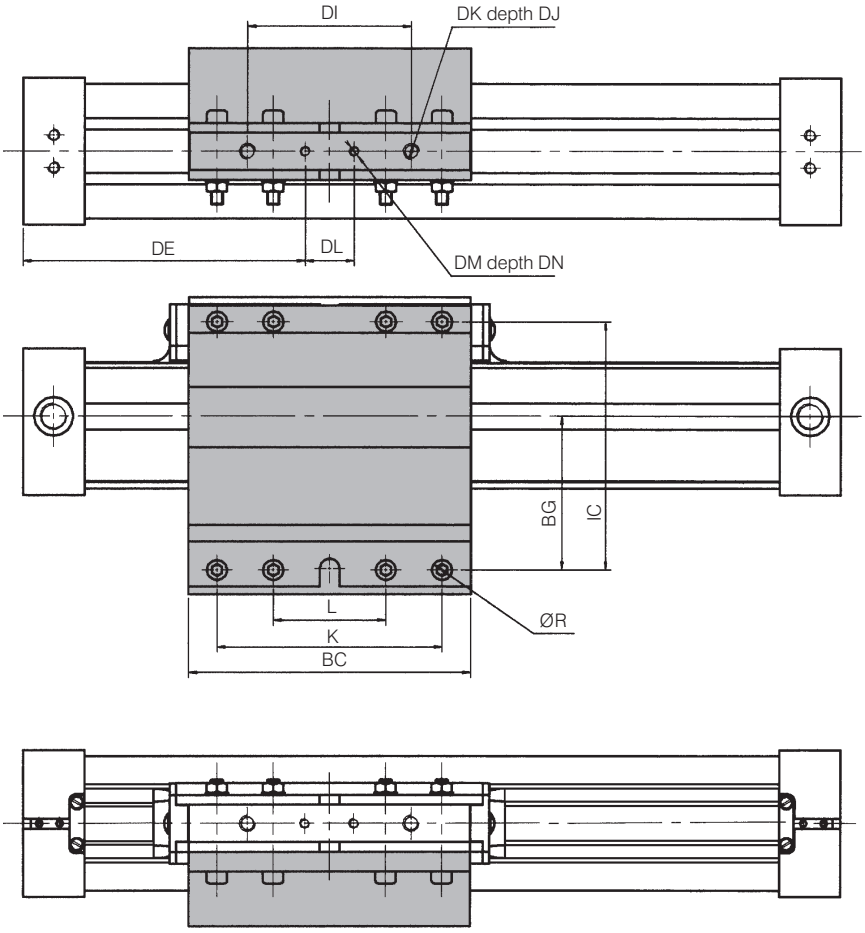

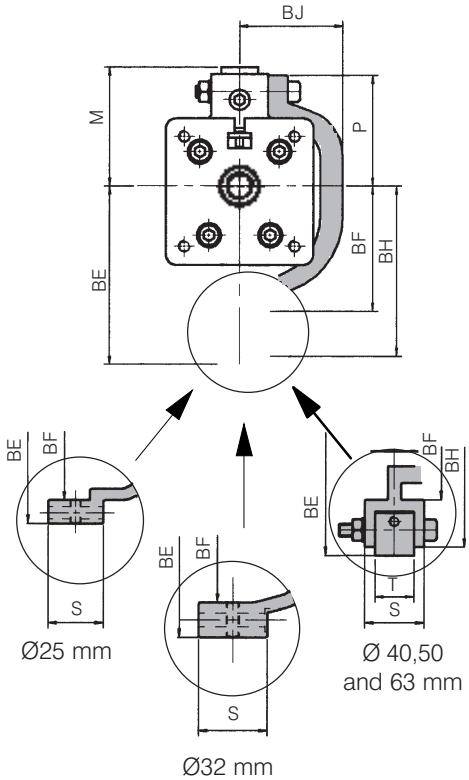

Dimensions (mm)

Ø	BC	BE	BF	BG	BH	BJ	DE	DI	DJ	DK	DL	DM	DN	IC	K	L	M	P	Ø R	S	T
25	108	40	29	35	40	35	95	80	10	M5	24	M5	11	66	-	50	36,5	36,5	6	26	-
32	144	50	34	42	50	38	114	120	13	M6	24	M5	13	80	120	100	46	46	6	32	-
40	138	88	61	76	84	50,5	139	80	19	M8	24	M5	19	122	110	55	58	55	7	28	18
50	184	95	65	85	95	65	-	160	17	M8	-	-	-	137	140	95	62	62	9	34	19
63	208	124	89	109	119	77	-	140	22	M8	-	-	-	170	180	90	76	61	9	30	19

Full dimensions see page 8.

Double canteliver carriage
P1R-RXXXMN-XXXX

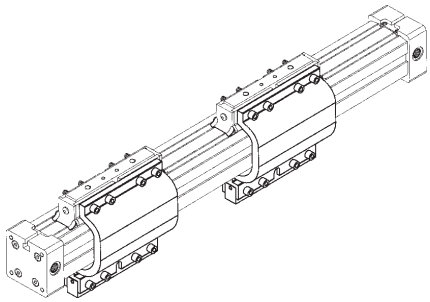

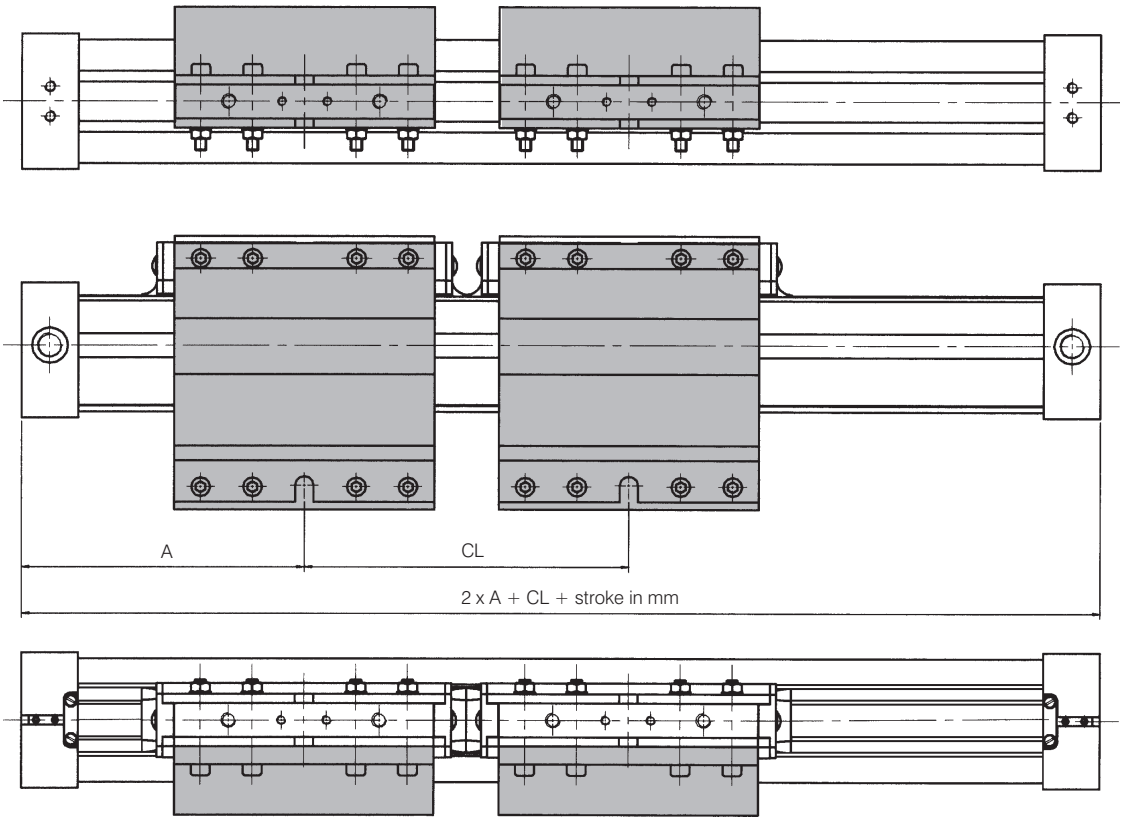

Dimensions (mm)

Ø	A	CL
25	100,6	131
32	125,9	175
40	151	210
50	170,2	251
63	215,1	309

Note:

Each carriage is independent, and the distance between them is determined by the application or to compensate for torques Mx and Mz.

The stroke and any increase in CL dimension should be added to the overall length of the cylinder.

Full dimensions see page 8.

Single cantilever T-carriage
P1R-SXXXMP-XXXX

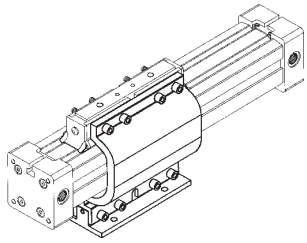

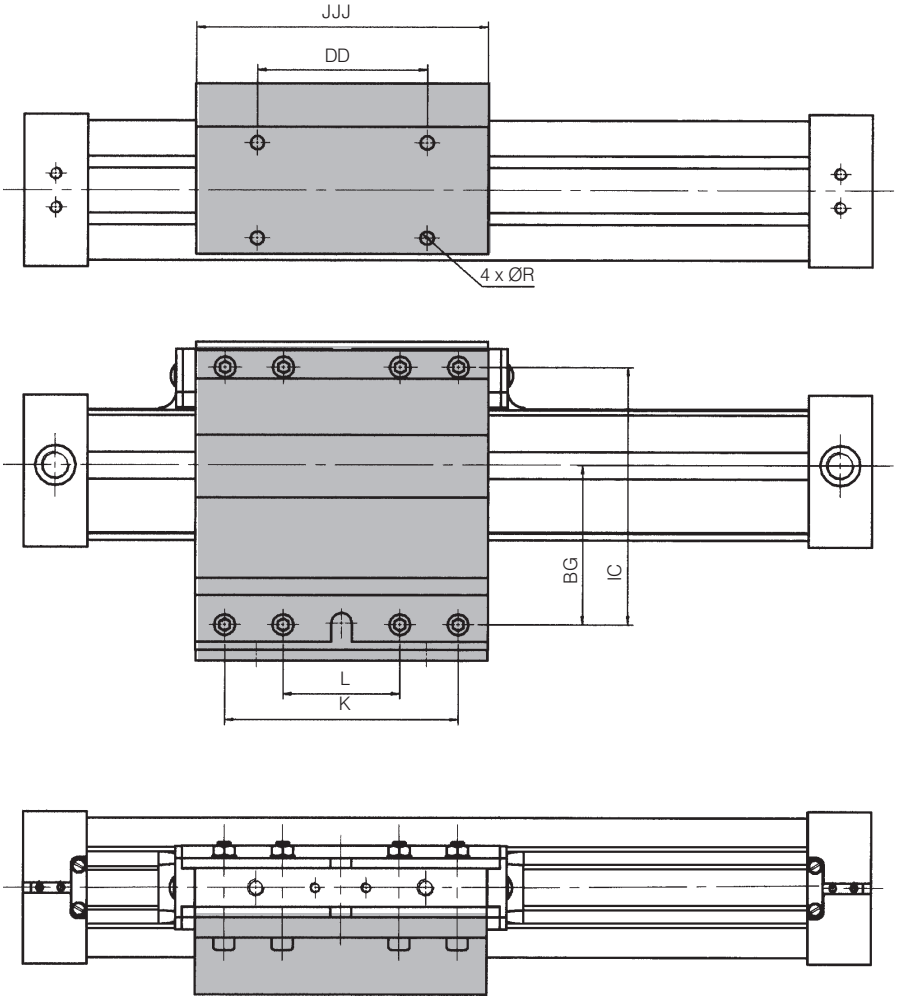

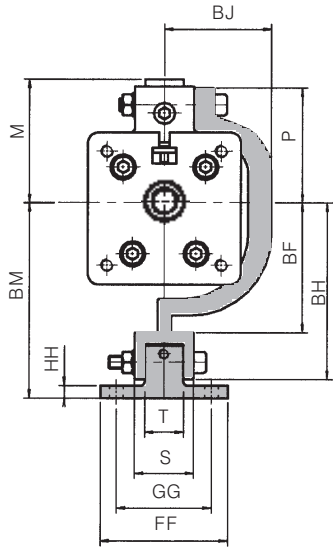

Dimensions (mm)

Ø	BF	BG	BH	BJ	BM	DD	FF	GG	HH	IC	JJJ	K	L	M	P	Ø R	S	T
40	61	76	84	50,5	93	80	60	45	6	122	138	110	55	58	55	6	28	18
50	65	85	95	65	106	130	80	60	7	137	200	140	15	62	62	8	34	19
63	89	109	119	77	130	130	80	60	7	170	208	180	90	76	61	8	30	19

Full dimensions see page 8.

Double cantilever T-carriage
P1R-RXXXMP-XXXX

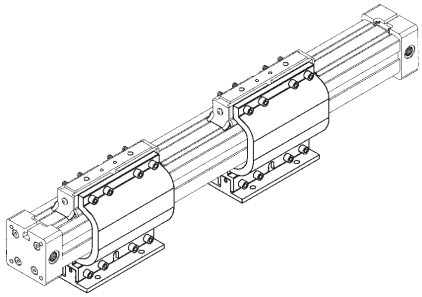

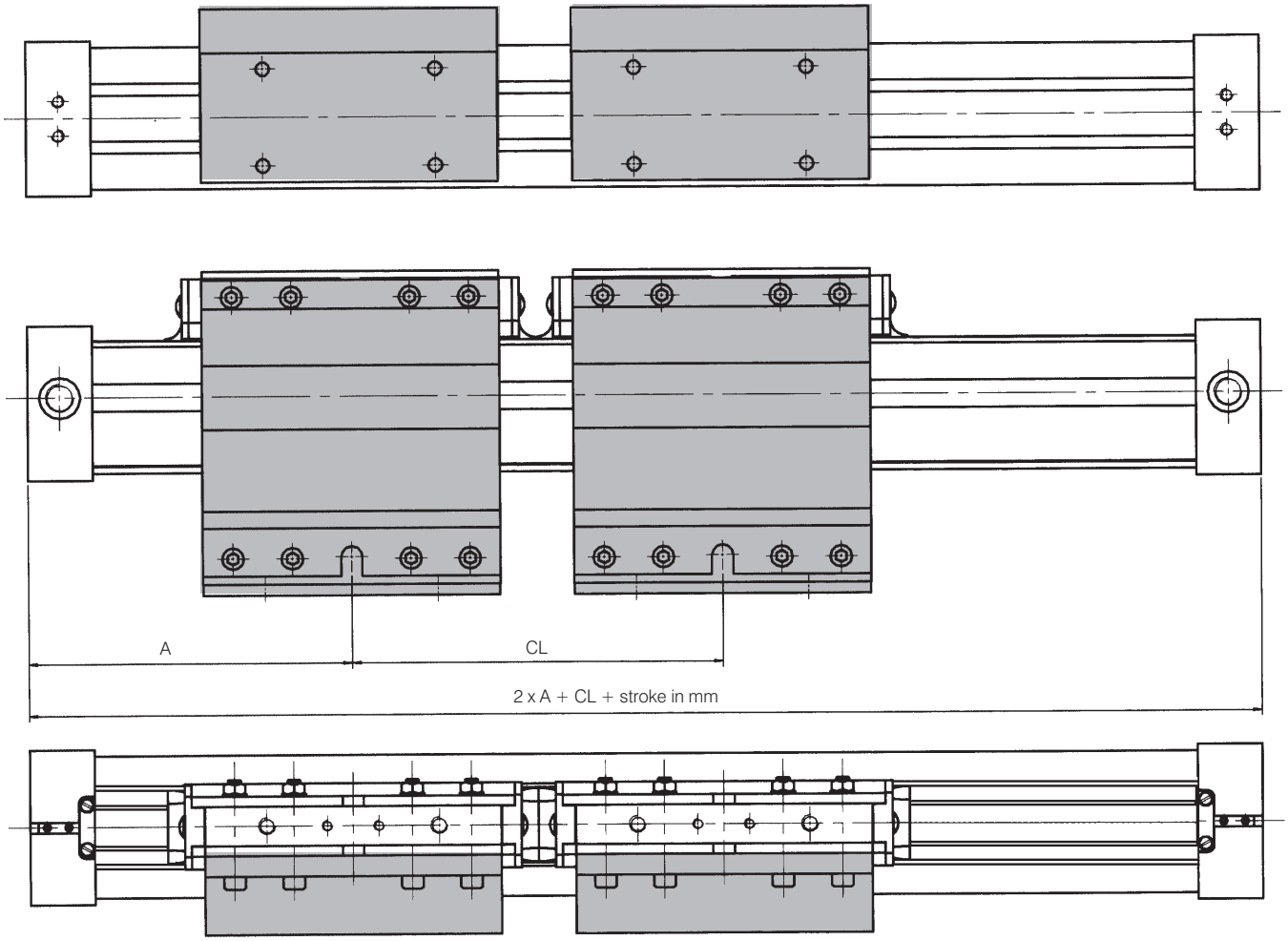

Dimensions (mm)

Ø	A	CL
40	151	210
50	170,2	251
63	215,1	309

Note :

Each carriage is independent, and the distance between them is determined by the application or to compensate for torques Mx and Mz.

The stroke and any increase in CL dimension should be added to the overall length of the cylinder.

Full dimensions see page 8.

Single cantilever carriage
P1R-SXXXMQ-XXXX

The articulated plate, is a coupling designed to connect to a guided load when its displacement differs from the cylinder carriage displacement.

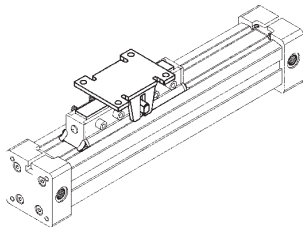

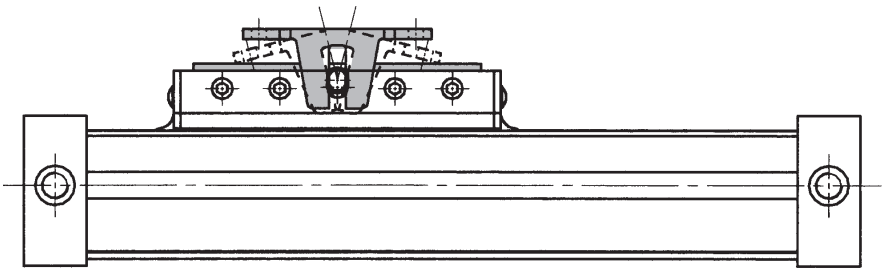

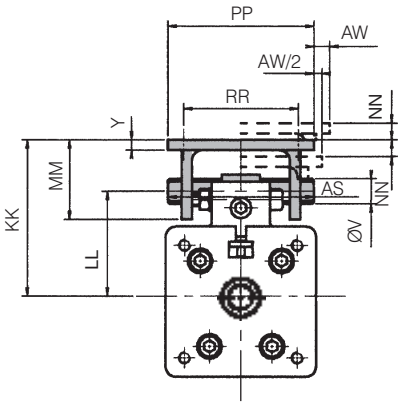

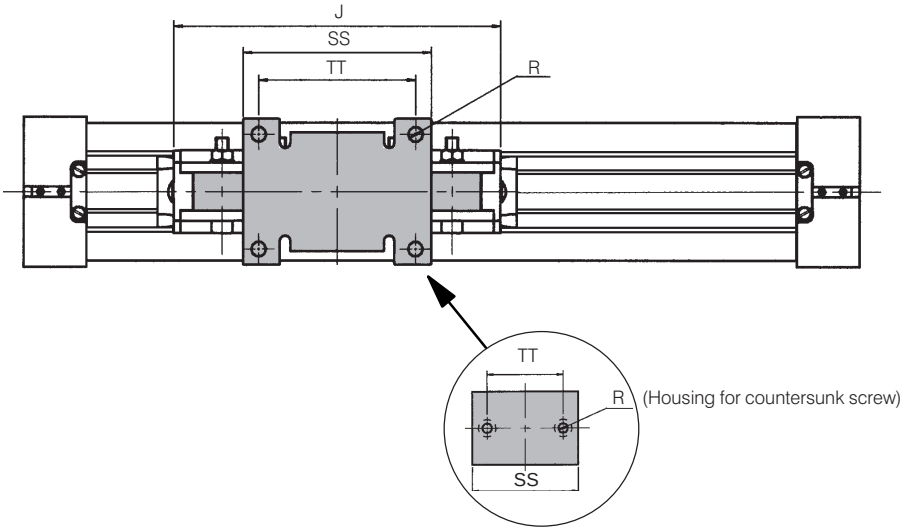

Ø 16, 25, 32 and 50 mm

Dimensions (mm)

Ø	AS	AW	J	KK	LL	MM	NN	PP	R	RR	SS	TT	Ø V	Y
16	28	± 1	76	32	23,5	12,5	± 4	25	M4	-	20	10	5	2
25	42	± 1,5	127	43	36,5	20	± 3	37	M4	-	32	16	8	3
32	58	± 4	167	57	46,5	30	± 6	48	M6	-	70	50	12	4
40	70	± 5,5	157	63	48	38	± 9	70	M6	55	90	75	12	5
50	72	± 6	219	79	62	43	± 9	58	M8	-	100	80	16	5
63	82	± 8	227	82	65	44	± 9	90	M8	70	120	100	16	6

Full dimensions see page 8.

Single cantilever carriage
P1R-SXXXMR-XXXX

The articulated plate, is a coupling designed to connect to a guided load when its displacement differs from the cylinder carriage displacement.

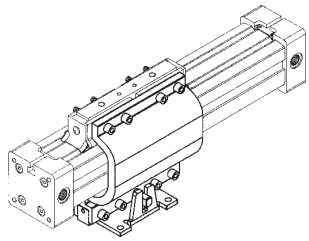

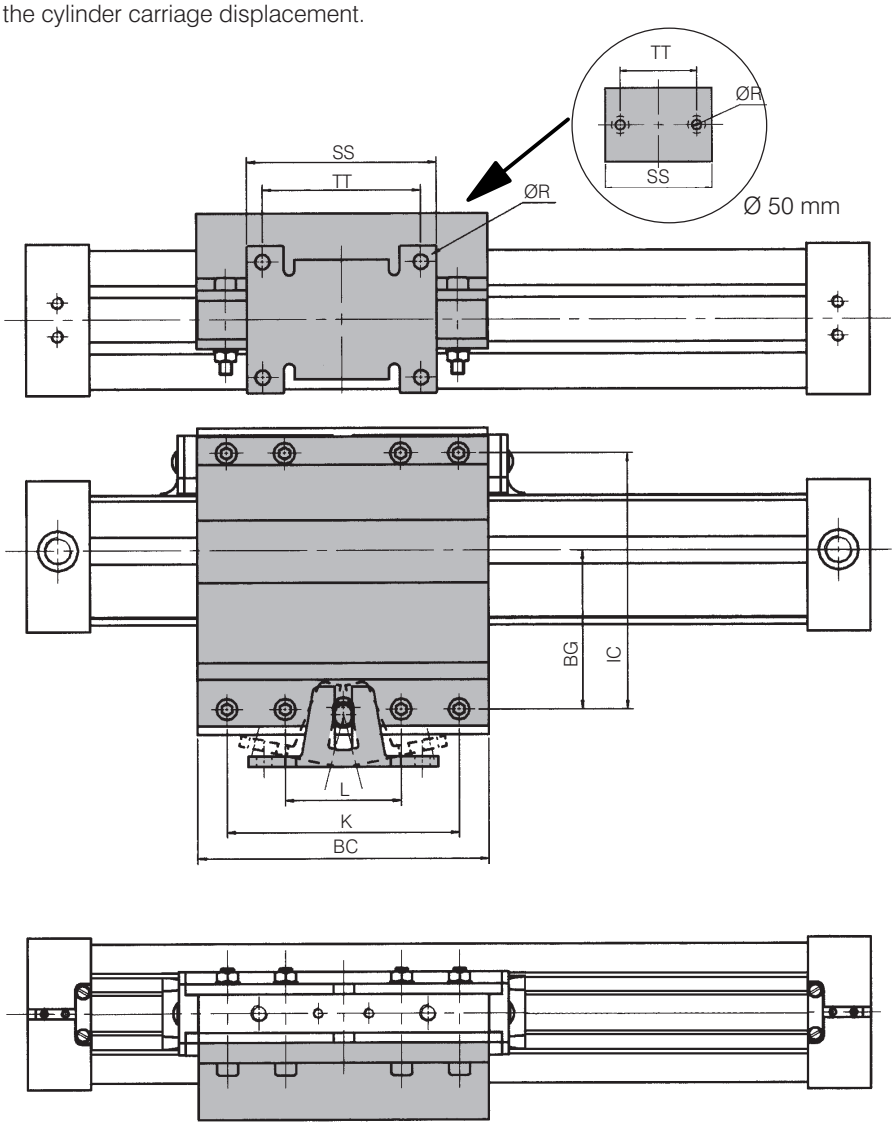

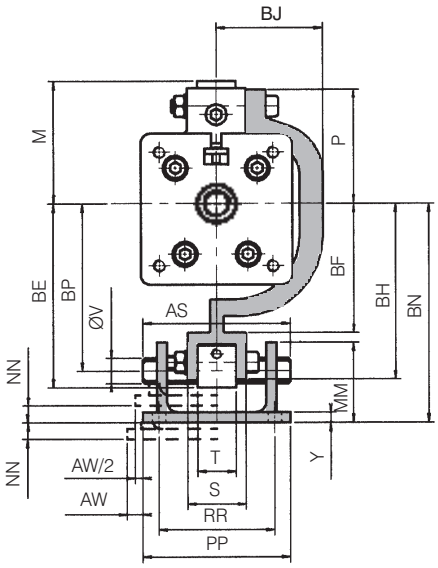

Dimensions (mm)

Ø	AS	AW	BC	BE	BF	BG	BH	BJ	BN	BP	IC	K	L	M
40	70	± 5,5	138	88	61	76	84	50,5	100,5	77,5	122	110	55	58
50	72	± 6	184	109	65	85	95	65	123	94,5	137	140	95	62
63	82	± 8	208	124	89	109	119	77	141	112	170	180	90	76

Ø	MM	NN	P	PP	Ø R	RR	S	SS	T	TT	Ø V	Y
40	38	± 9	55	70	6	55	28	90	18	75	12	5
50	43	± 9	62	58	9	-	34	100	19	80	16	5
63	44	± 9	61	90	9	70	30	120	19	100	16	6

Full dimensions see page 8.

Order code system

P1	R	-								-				

	Version
S	Single carriage 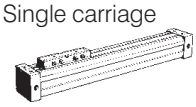
R	Double carriage 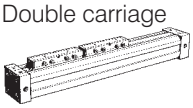

Diameter (mm)
016
025
032
040
050
063

	Option
M	Standard speed
K	Low speed

Stroke (mm)
0100 = 100 mm
1000 = 1000 mm

	Type of carriage	
0	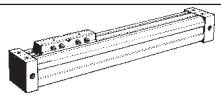	Basic carriage
M	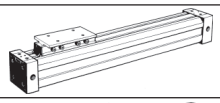	T-carriage (except Ø 16 mm)
N	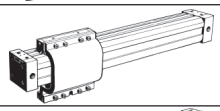	Cantilever carriage (except Ø 16 mm)
P	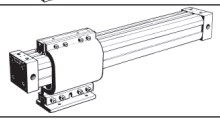	Cantilever T-carriage (for Ø 40 and 63 mm)
Q	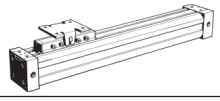	Articulated carriage (except double carriage)
R	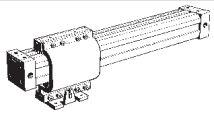	Cantilever articulated carriage (except double carriage) (for Ø 40 and 63 mm)

Note: All cylinders are equipped with 2 magnets for sensing.

Ordering example: rodless cylinder, single carriage,
standard speed with T-carriage Ø 40, stroke 1000 m, magnetic sensors and intermediate support.

Rodless cylinder:	: P1R-S040MM-1000	Qty : 1
Sensors:	: P1R-2XRL	Qty : 2
Side supports:	: P1R-4LMF	Qty : 1

Mounting kits

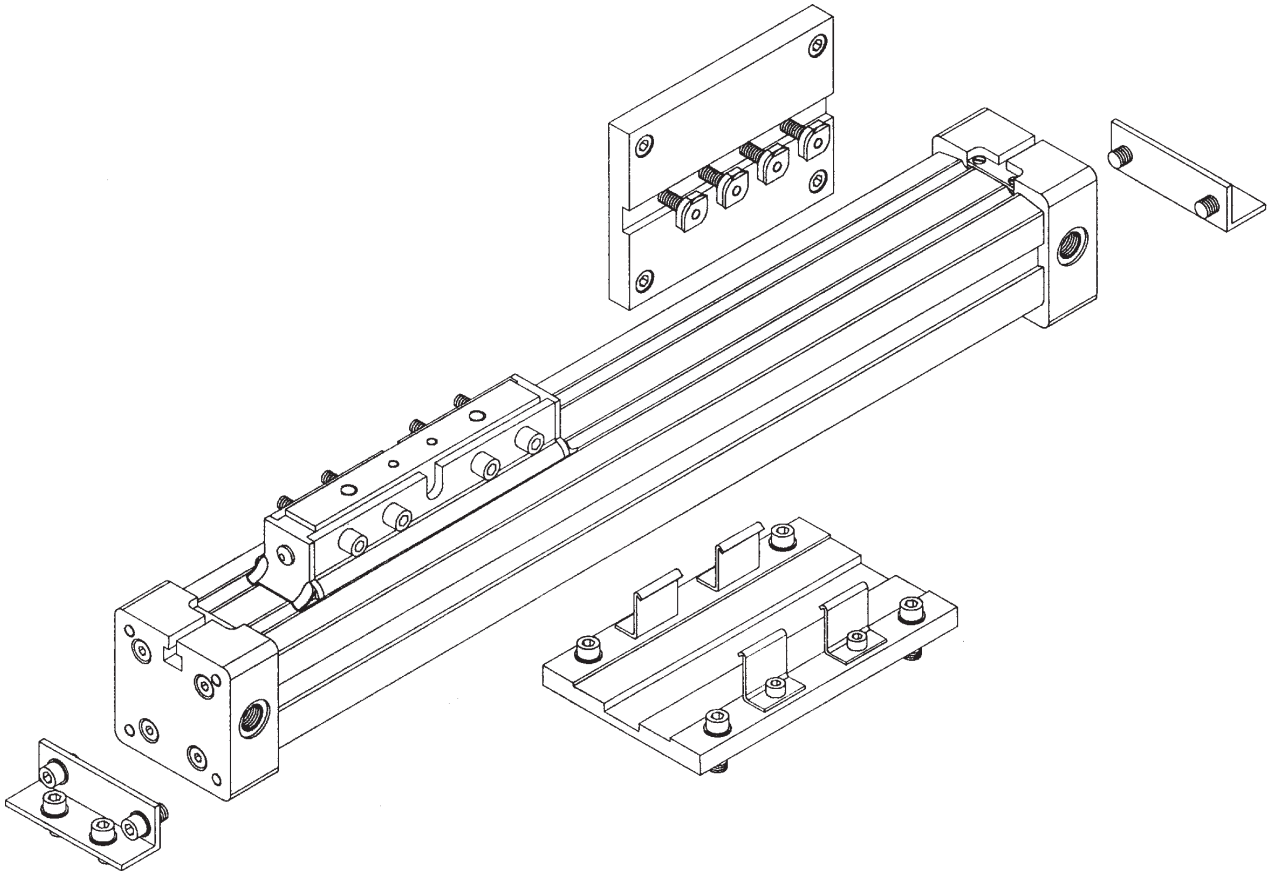

Centre support

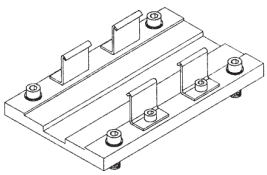

Material:
black anodised aluminium + folded, corrosion proofed sheet steel brackets.
Full dimensions see page 20.

Ø	Order code	Weight (Kg)
16	P1R-4FMX	0,04
25	P1R-4JMX	0,10
32	P1R-4KMX	0,25
40	P1R-4LMX	0,45
50	P1R-4MMX	0,65
63	P1R-4NMX	0,85

Centre support

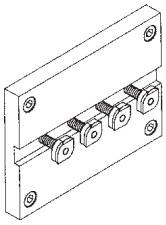

Material:
black anodised aluminium.
Space requirements, please refer to the dimensions on page 21.

Ø	Order code	Weight (Kg)
25	P1R-4JMY	0,15
32	P1R-4KMY	0,30
40	P1R-4LMY	0,50
50	P1R-4MMY	0,70
63	P1R-4NMY	0,90

Side supports

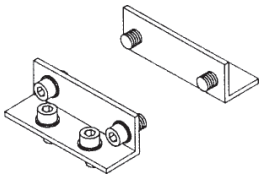

Material:
folded, corrosion proofed sheet steel, except Ø 40 and 63, black anodised aluminium.
Full dimensions see page 21.

Ø	Order code	Weight (Kg)
16	P1R-4FMF	0,04
25	P1R-4JMF	0,06
32	P1R-4KMF	0,10
40	P1R-4LMF	0,25
50	P1R-4MMF	0,35
63	P1R-4NMF	0,45

Mountings

Permissible flexing torques
(For 1 mm flex)

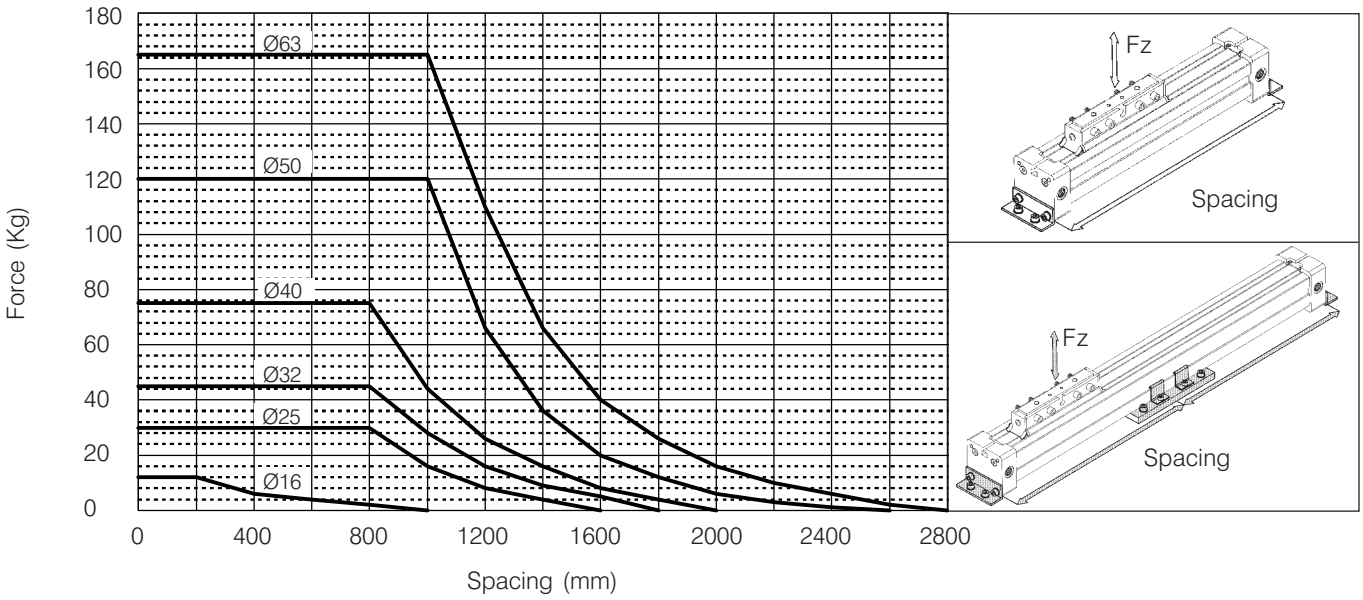

Intermediate supports

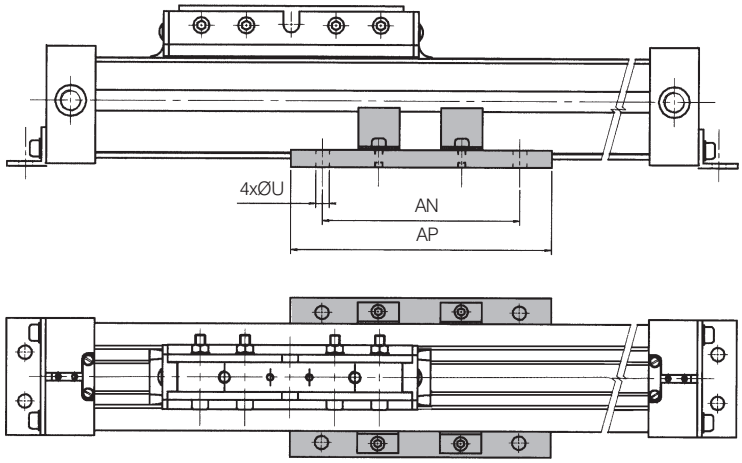

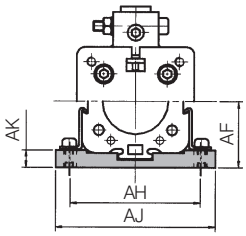

Dimensions (mm)

Ø	AF	AH	AJ	AK	AN	AP	ØU
16	14,6	46,4	58,4	4,8	-	20	5,5
25	25	60,5	76	6	32	51	5
32	38,5	68	86	12	44,5	63,5	6
40	41	80	98	11	121	160	8
50	54	92	111	15	121	160	8
63	64	111	130	14	121	160	8

Intermediate supports for cantilever carriages

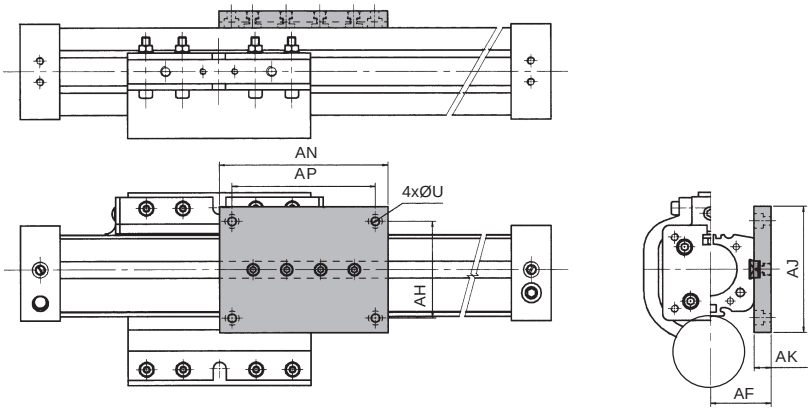

Dimensions (mm)

Ø	AF	AH	AJ	AK	AN	AP	ØU
25	37	60,5	79,5	13	76	57	6
32	39	73	95	13	127	108	6
40	46	73	95	13	127	108	6
50	51	95	121	13	130	108	8
63	60	105	137	13	130	108	8

Note:
It is not possible to install a centre support with combined side supports underneath.
For strokes >500 mm, at least 2 side supports are advisable.

Side supports

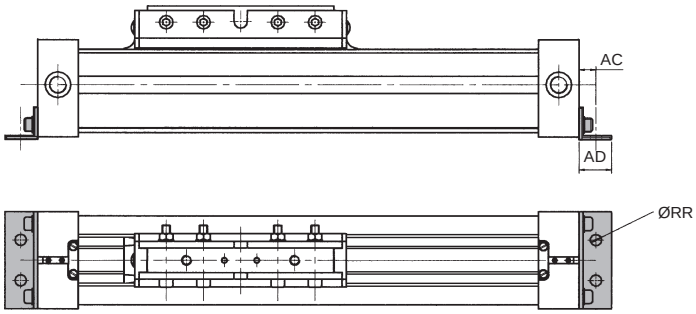

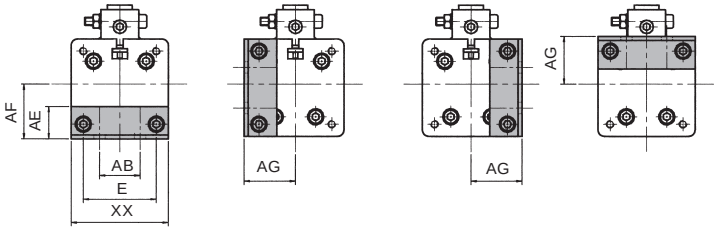

Dimensions (mm)

Ø	AB	AC	AD	AE	AF	AG	E	ØRR	XX
16	18	10	14	12,5	14,6	-	17,5	4	26
25	27	16	22	18	25	24	27	6	39
32	36	12	20	26	38,5	36	36	7	50
40	30	12,5	24	24	40,5	38	54	8	72
50	54	18	28	34	54	51	54	9	76
63	48	15	30	40	66	60	78	10	106

Accessories

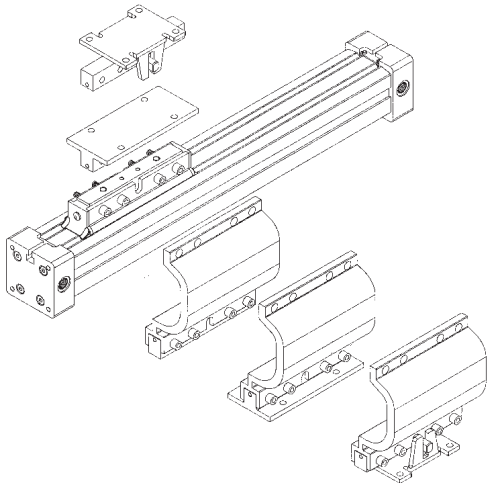

T-carriage

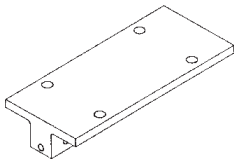

Material :
black anodised aluminium.
Full dimensions see
page 10.

Ø	Single carriage			Double carriage		
	Order code	Weight(Kg)	Qty	Order code	Weight(Kg)	Qty
25	P1R-4JMB	0,12	1	P1R-4JMB	0,12	2
32	P1R-4KMB	0,24	1	P1R-4KMB	0,24	2
40	P1R-4LMB	0,25	1	P1R-4LMB	0,25	2
50	P1R-4MMB	0,35	1	P1R-4MMB	0,35	2
63	P1R-4NMB	0,40	1	P1R-4NMB	0,40	2

Cantilever carriage

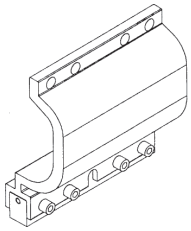

Material :
black anodised aluminium.
Full dimensions see
page 12.

Ø	Single carriage			Double carriage		
	Order code	Weight(Kg)	Qty	Order code	Weight(Kg)	Qty
25	P1R-4JMQ	0,24	1	P1R-4JMQ	0,24	2
32	P1R-4KMQ	0,43	1	P1R-4KMQ	0,43	2
40	P1R-4LMQ	0,84	1	P1R-4LMQ	0,84	2
50	P1R-4MMQ	1	1	P1R-4MMQ	1	2
63	P1R-4NMQ	1,1	1	P1R-4NMQ	1,1	2

Cantilever T-carriage

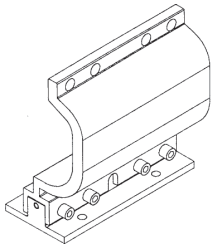

Material :
black anodised aluminium.
Full dimensions see
page 14.

Ø	Single carriage			Double carriage		
	Order code	Weight (Kg)	Qty	Order code	Weight (Kg)	Qty
40	P1R-4LMW	1	1	P1R-4LMW	1	2
50	P1R-4MMW	1,25	1	P1R-4MMW	1,25	2
63	P1R-4NMW	1,40	1	P1R-4NMW	1,40	2

Articulated carriage

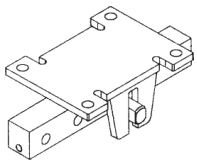

Material :
black anodised aluminium + folded,
hot-dip galvanized sheet steel plate.
Full dimensions see
page 16.

Ø	Single carriage	
	Order code	Weight (Kg)
16	P1R-4FML	0,08
25	P1R-4JML	0,10
32	P1R-4KML	0,22
40	P1R-4LML	0,37
50	P1R-4MML	0,60
63	P1R-4NML	0,70

Articulated cantilever carriage

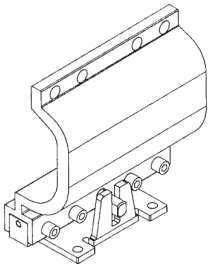

Material :
black anodised aluminium + folded,
hot-dip galvanized sheet steel plate.
Full dimensions see
page 17.

Ø	Single carriage	
	Order code	Weight (Kg)
40	P1R-4LMU	1,12
50	P1R-4MMU	1,50
63	P1R-4NMU	1,70

Position sensing

One or more additional sensors(s) or detector(s) can be added for position detection along length of stroke.

Order codes

Order code	Fig	Description
P1R-2XRL	1	Sensor + LED with 3 m cable
P1R-2XSH	2	Sensor + LED for connector
P1R-2XHL	1	Detector + LED with 3 m cable
P1R-2XJH	2	Detector + LED for connector
7121 1001-95	3	Straight connector with 5m cable

Dovetail attachment

Sensor or detector can be adjusted along length of stroke

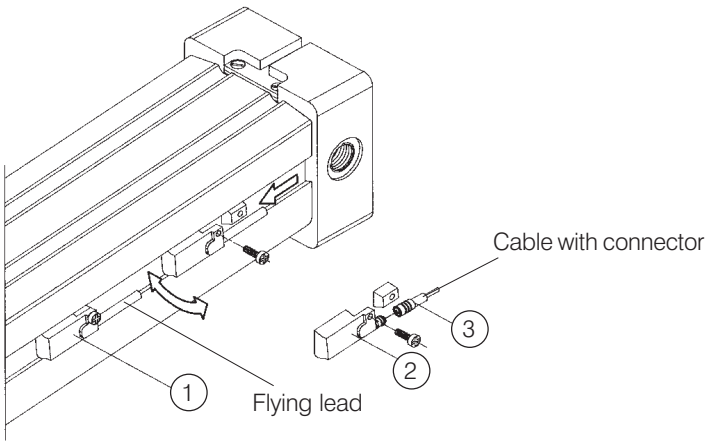

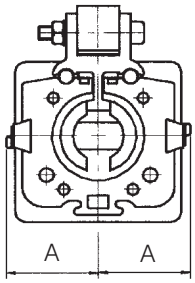

Characteristics

Specification	Orders codes			
	P1R-2XRL	P1R-2XSH	P1R-2XHL	P1R-2XJH
Weight	55g	2g	61g	4g
Cable length	3m	-	3m	-
Working temperature	- 10°C à + 70°C			
Protection	IP67	IP65	IP67	IP65
Frequency	50 to 1000Hz			
Response time, opening	1 ms	1 ms	0,01 ms	0,01 ms
Response time, closing	1 ms	1 ms	0,01 ms	0,01 ms
Service life	10 cycles		N/A	
Repeatability	± 0,01 mm			
Type	Magnetic sensors		Magnetic induction sensors, PNP	
Contacts	NO	NO	NO	NO
Max. current	380mA		See note opposite	
Max. power	10W		12W	
Voltage 50 Hz max.	110 AC	60 AC	---	---
Max. working voltage	110 AC	60 AC	10 à 28 DC	
Max. voltage drop	2,8 V		1 V	
Cable specification	2-core 0,2 mm² PVC Artic grade	Connector 7121 1001-95	3-core 0,2 mm² PVC Artic grade	Connector 7121 1001-95
Cable diameter	4 mm	-	4 mm	-
Housing material	Black Nylon 66			
Red LED	Standard			
Supplementary information			Polarity reversal protection Diode protected output	

Dimensions (mm)

Ø	16	25	32	40	50	63
A	22	31	33,5	40	45	55

Current variations as a function of temperature

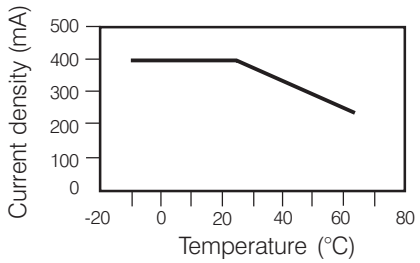

Between 20°C and 70°C, linear current fall-off from 400 mA to 250 mA.

Grease

Option		Order code	Package
Standard speed	M	9880003	35 ml
Low speed	K	9880002	35 ml

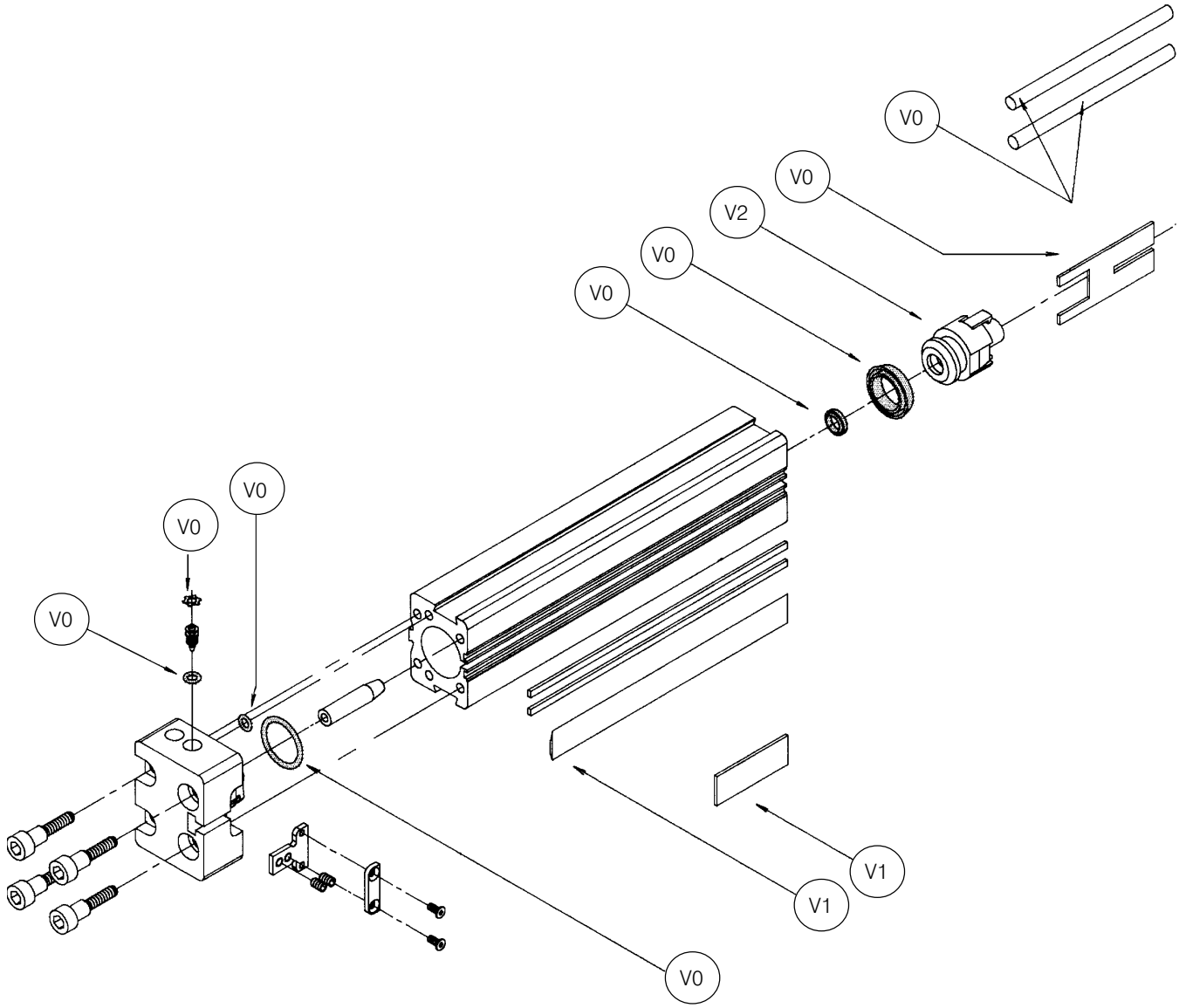

Spare parts kits

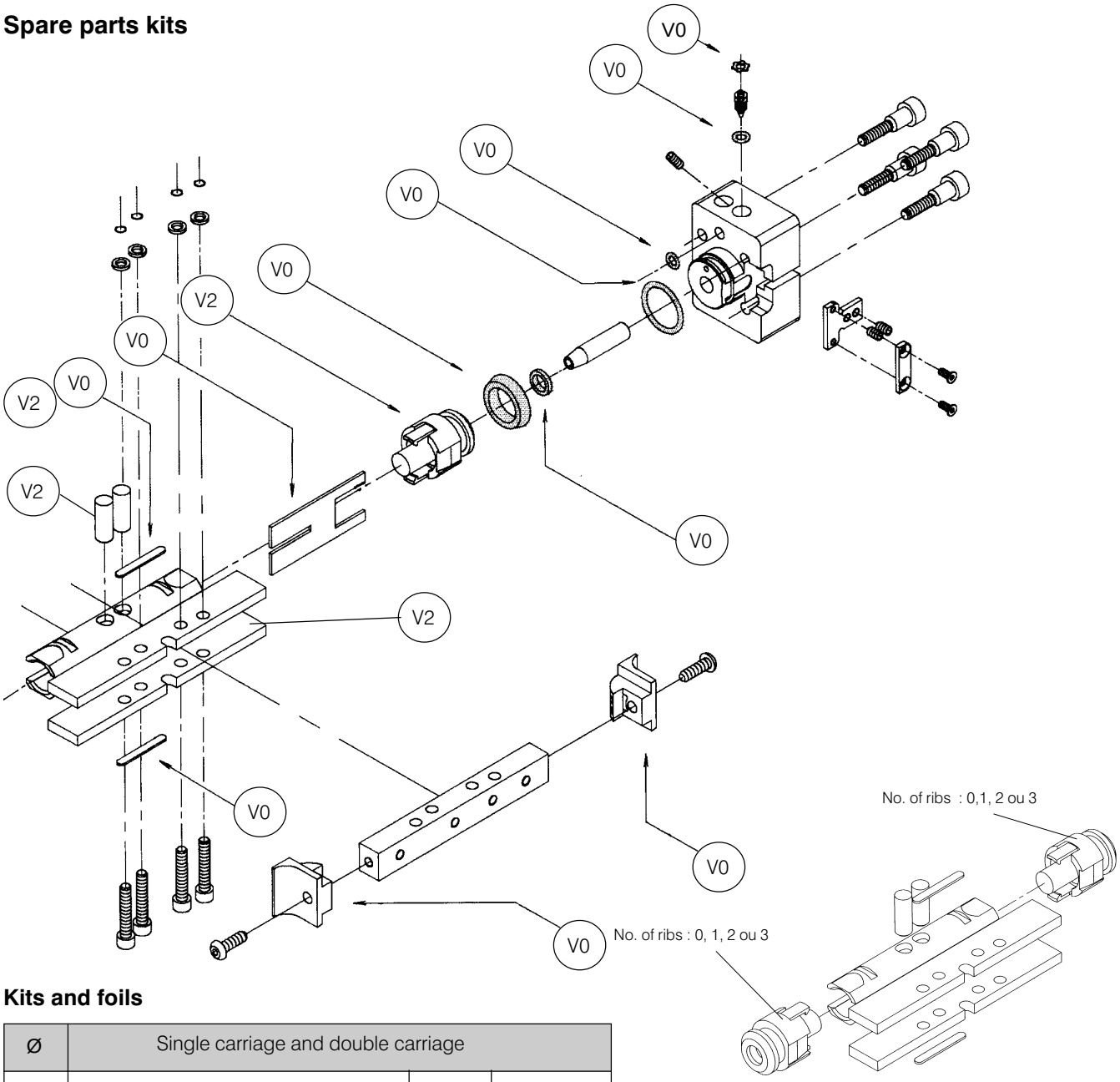

Kits and foils

Ø	Single carriage and double carriage		
	Seal kit	Marked	
16	P1R-6FRM	V_0	
25	P1R-6JRM		
32	P1R-6KRM		
40	P1R-6LRM		
50	P1R-6MRM		
63	P1R-6NRM		

Foils (inner & outer band)				
	Single carriage	Marked	Double carriage	Marked
16	P1R-6FRA - XXXX*	V_1	P1R-6FRB - XXXX*	V_1
25	P1R-6JRA - XXXX*		P1R-6JRB - XXXX*	
32	P1R-6KRA - XXXX*		P1R-6KRB - XXXX*	
40	P1R-6LRA - XXXX*		P1R-6LRB - XXXX*	
50	P1R-6MRA - XXXX*		P1R-6MRB - XXXX*	
63	P1R-6NRA - XXXX*		P1R-6NRB - XXXX*	

* Specify stroke in mm

Spare part kit containing carriage/piston assembly, with magnets and spacer

Ø	Order code	Marked	Ribs
16	P1R-6FPE-0	V_2	0
	P1R-6FPE-1		1
	P1R-6FPE-2		2
	P1R-6FPE-3		3
25	P1R-6JPE-2		2
	P1R-6JPE-3		3
32	P1R-6KPE-2		2
	P1R-6KPE-3		3
40	P1R-6LPE-2		2
	P1R-6LPE-3		3
50	P1R-6MPE-2		2
	P1R-6MPE-3		3
63	P1R-6NPE-2		2
	P1R-6NPE-3		3

Cylinder cross reference list

	Order code Parker Pneumatic	Order code Schrader Bellows	Order code Telepneumatic	Order code Atlas Automation
Single carriage, standard speed	P1R-S025M0-xxxx*	25-R100B-xxxx*	PAS-N125A	RC30M-25-xxxx*
	P1R-S025MM-xxxx*	N/A	PAS-N125D	RC30M-25-xxx*+A02
	P1R-S025MN-xxxx*	N/A	N/A	RC30M-25-xxx*+A04
	P1R-S025MQ-xxxx*	N/A	N/A	RC30M-25-xxx*+A08
	P1R-S032M0-xxxx*	32-R100B-xxxx*	PAS-N132A	RC30M-32-xxxx*
	P1R-S032MM-xxxx*	N/A	PAS-N132D	RC30M-32-xxx*+A02
	P1R-S032MN-xxxx*	N/A	N/A	RC30M-32-xxx*+A04
	P1R-S032MQ-xxxx*	N/A	N/A	RC30M-32-xxx*+A08
	P1R-S040M0-xxxx*	40-R100B-xxxx*	PAS-N140A	RC30M-40-xxxx*
	P1R-S040MM-xxxx*	N/A	PAS-N140D	RC30M-40-xxx*+A02
	P1R-S040MN-xxxx*	N/A	N/A	RC30M-40-xxx*+A04
	P1R-S040MP-xxxx*	N/A	N/A	RC30M-40-xxx*+A06
	P1R-S040MQ-xxxx*	N/A	N/A	RC30M-40-xxx*+A08
	P1R-S040MR-xxxx*	N/A	N/A	RC30M-40-xxx*+A09
Single carriage, low speed	P1R-S025K0-xxxx*	25-R110B-xxxx*	N/A	N/A
	P1R-S032K0-xxxx*	32-R110B-xxxx*	N/A	N/A
	P1R-S040K0-xxxx*	40-R110B-xxxx*	N/A	N/A
Double carriage, standard speed	P1R-R025M0-xxxx*	25-R700B-xxxx*	PAS-L125A	RC30M-25-xxx*+A01+PXX
	P1R-R025MM-xxxx*	N/A	PAS-L125E	RC30M-25-xxx*+A03+PXX
	P1R-R025MN-xxxx*	N/A	N/A	RC30M-25-xxx*+A05+PXX
	P1R-R032M0-xxxx*	32-R700B-xxxx*	PAS-L132A	RC30M-32-xxx*+A01+PXX
	P1R-R032MM-xxxx*	N/A	PAS-L132E	RC30M-32-xxx*+A03+PXX
	P1R-R032MN-xxxx*	N/A	N/A	RC30M-32-xxx*+A05+PXX
	P1R-R040M0-xxxx*	40-R700B-xxxx*	PAS-L140A	RC30M-40-xxx*+A01+PXX
	P1R-R040MM-xxxx*	N/A	PAS-L140E	RC30M-40-xxx*+A02+PXX
	P1R-R040MN-xxxx*	N/A	N/A	RC30M-40-xxx*+A05+PXX
	P1R-R040MP-xxxx*	N/A	N/A	RC30M-40-xxx*+A07+PXX
Double carriage, low speed	P1R-R025K0-xxxx*	25-R710B-xxxx*	N/A	N/A
	P1R-R032K0-xxxx*	32-R710B-xxxx*	N/A	N/A
	P1R-R040K0-xxxx*	40-R710B-xxxx*	N/A	N/A

Sensor and detector cross reference

	Order code Parker Pneumatic	Order code Schrader Bellows	Order code Telepneumatic	Order code Atlas Automation
Detector + LED	P1R-2XHL	835A	PAX-DG1P10L3	7121 1001 93
Detector + LED for connector	P1R-2XJH	836A	PAX-DG1P10S	7121 1001 94
Sensor + LED	P1R-2XRL	843A	PAX-DG1R10L3	7121 1001 91
Sensor + LED for connector	P1R-2XSH	844A	PAX-DG1R10S	7121 1001 92
Straight connector	7121 1001-95	9878010	XSZ-CS902	9126 3443 41

* Add the stroke in mm.

Accessory cross reference list

	Order code Parker Pneumatic	Order code Schrader Bellows	Order code Telepneumatic	Order code Atlas Automation
T- carriage	P1R-4JMB	25-R800T	N/A	7121 1001-54
	P1R-4KMB	32-R800T	N/A	7121 1201-54
	P1R-4LMB	40-R800T	N/A	7121 1401-54
	(2x)P1R-4JMB	25-R800E	N/A	(2x)7121 1001-54
(2x)P1R-4KMB	32-R800E	N/A	(2x)7121 1201-54	
	(2x)P1R-4LMB	40-R800E	N/A	(2x)7121 1401-54
Canteliver carriage	P1R-4JMQ	25-R800J	PAS-ZV125	7121 1001-53
	P1R-4KMQ	32-R800J	PAS-ZV132	7121 1201-53
	P1R-4LMQ	40-R800J	PAS-ZV140	7121 1401-53
	(2x)P1R-4JMQ	25-R800B	N/A	(2x)7121 1001-53
	(2x)P1R-4KMQ	32-R800B	N/A	(2x)7121 1201-53
	(2x)P1R-4LMQ	40-R800B	N/A	(2x)7121 1401-53
Canteliver T- carriage	P1R-4LMW	40-R800L	PAS-ZX140	7121 1401-58
	(2x)P1R-4LMW	40-R800K	N/A	(2x)7121 1401-58
Articulated carriage	P1R-4JML	25-R800A	PAS-ZY125	7121 1001-52
	P1R-4KML	32-R800A	PAS-ZY132	7121 1201-52
	P1R-4LML	40-R800A	PAS-ZY140	7121 1401-52
Cantilever articulated carriage	P1R-4LMU	40-R800G	PAS-ZW140	7121 1401-59
Centre support	P1R-4JMX	25-R800F	PAS-ZF125	7121 1001-55
	P1R-4KMX	32-R800F	PAS-ZF132	7121 1201-55
	P1R-4LMX	40-R800F	PAS-ZF140	7121 1401-55
Centre support cantilever carriage	P1R-4JMY	25-R800H	PAS-ZG125	7121 1001-56
	P1R-4KMY	32-R800H	PAS-ZG132	7121 1201-56
	P1R-4LMY	40-R800H	PAS-ZG140	7121 1401-56
Side support	P1R-4JMF	25-R800I	PAS-ZE125	7121 1001-57
	P1R-4KMF	32-R800I	PAS-ZE132	7121 1201-57
	P1R-4LMF	40-R800I	PAS-ZE140	7121 1401-57

Spare part kit cross reference for RC series (old version)

	Order code Schrader Bellows	Order code Telepneumatic	Order code Atlas Automation
Seal kit, single carriage and double carriage	25-R100R0	PAS-R1125-xxxx*	7121 1001-81
	32-R100R0	PAS-R1132-xxxx*	7121 1201-81
	40-R100R0	PAS-R1140-xxxx*	7121 1401-81
	25-R700R0	PAS-R1225-xxxx*	7121 1001-82
	32-R700R0	PAS-R1232-xxxx*	7121 1201-82
	40-R700R0	PAS-R1240-xxxx*	7121 1401-82
Sealing strips, double carriage	25-R100R-xxxx*	Contents in kit- above	
	32-R100R-xxxx*		
	40-R100R-xxxx*		-
	25-R700R-xxxx*		-
	32-R700R-xxxx*		-
	40-R700R-xxxx*		-

* Add stroke in mm.