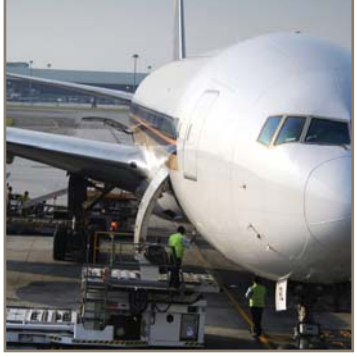

aerospace
climate control
electromechanical
filtration
fluid & gas handling
hydraulics
pneumatics
process control
sealing & shielding

Guardian®

Portable Filtration System

Parker

ENGINEERING YOUR SUCCESS.

Ground Support

Hydraulic Service

Mining

The Guardian portable filtration system is a unique pump/motor/filter combination designed for conditioning and transferring petroleum-based and water emulsion fluids. It protects your system from contamination added with new fluid because new fluid is not necessarily clean fluid. Most new fluids right out of the drum are unfit for use due to high initial concentrations of contaminants. Contamination may be added to a new fluid during processing, mixing, handling, and storage.

The Guardian also circulates and “polishes” fluid in your existing systems to reduce the contamination to an acceptable level.

There are literally hundreds of applications that the Guardian is suited for, with more being discovered each day. If your system is sensitive to the harmful effects of contamination, then the Guardian may be ideal for you.

Features	Advantages	Benefits
Lightweight, hand held, compact design (less than 24 lbs 16" X 8" approximate foot print).	Easy to carry and fits easily on top of 55 gallon drums.	One person operation, capable of getting to hard to reach areas.
Flow rate to 4 gpm.	Filters and transfers simultaneously.	One step operation.
Powerful pump/motor combination with Carboxylated Nitrile seals standard.	Handles fluids up to 16,000 SUS viscosity (11,000 SUS -24 VDC).	Reliable performance in a wide variety of operating conditions.
Built-in relief valve with no downstream fluid bypass.	Only filtered fluid reaches downstream components.	100% filtration ensured, even when unattended.
Wide variety of filter elements available.	High capacity 2 micron absolute disposable microglass to 74 micron cleanable wire and water removal.	Maximizes element life between changes.
Clear, wire-reinforced 5' hose assemblies with wand attachments.	No additional hardware required.	Ready to use and easy to maneuver.
Optional quick disconnect hose connections.	Fast, easy setup and tear-down.	Eliminates messy drips.
Heavy-duty ¼ HP, 115 VAC (230 VAC, 24 VDC- optional) motor with thermal overload protection.	UL recognized and CSA listed, with replaceable brushes.	Safe, reliable performance; field serviceable.
Geroter pump with visible serviceable inlet strainer.	Dirt tolerant design with added protection.	Pump reliability in highly contaminated fluids.
Quiet operation.	Less than 70dB noise level @ 3 feet.	Can be used most anywhere with minimal disturbance.
Convenient inlet-to-outlet hose connection.	Contains fluids when transporting.	Clean and safe operation.
Low center of gravity.	Guardian stability.	Unattended reliability.
Dual motor seals.	Added motor protection.	Longer motor life.
Auxiliary inlet/outlet ports.	Used in place of, or in addition to, standard ports. The outlet can also be used as a sampling port.	Flexibility.

Mobile

Industrial

Marine

Guardian Series

Installation and Specification Data

Maximum Allowable Operating Pressure (MAOP): 50 psi (3.4 bar)

Flow Capacity: Up to 4 gpm (15 lpm)

Maximum Recommended Fluid Viscosity: (.85 specific gravity)

110-120 VAC and 220-240 VAC	16,000 SUS
24VDC	**11,000 SUS**

Warning: Explosion hazard. Do not pump flammable liquids such as gasoline, alcohol, solvents, etc.

Operating Temperatures:
Unit: -15°F to 180°F (-26°C to 82°C)
Wand/Hose: 25°F to 120°F (-4°C to 49°C)

Visual Indicator: Differential pressure type, set at 25 psid

Recommended Fluids: petroleum based oils, water emulsions, and diesel fuels

Integral Relief Valve: set at 50 psi for motor protection.

Noise Level: <70db at 3 ft.

Electrical Motor: ¼ hp@2500 rpm.
24 VDC; 10A max.
110-120 VAC; 50/60 Hz; 3A max.
220-240 VAC; 50/60 Hz; 1.5A max.
Thermal overload protected.
Replaceable brushes (500 hours).

Weight: approximately 23 lbs. 5 oz.

Materials:
Housing: cast aluminum
Cover: die cast aluminum
Handle and Indicator: nylon
Wands and Hose: PVC
Fittings: brass
Seals: fluorocarbon/ carboxylated nitrile

Guardian Schematic

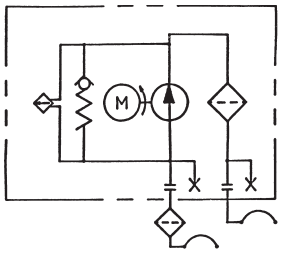

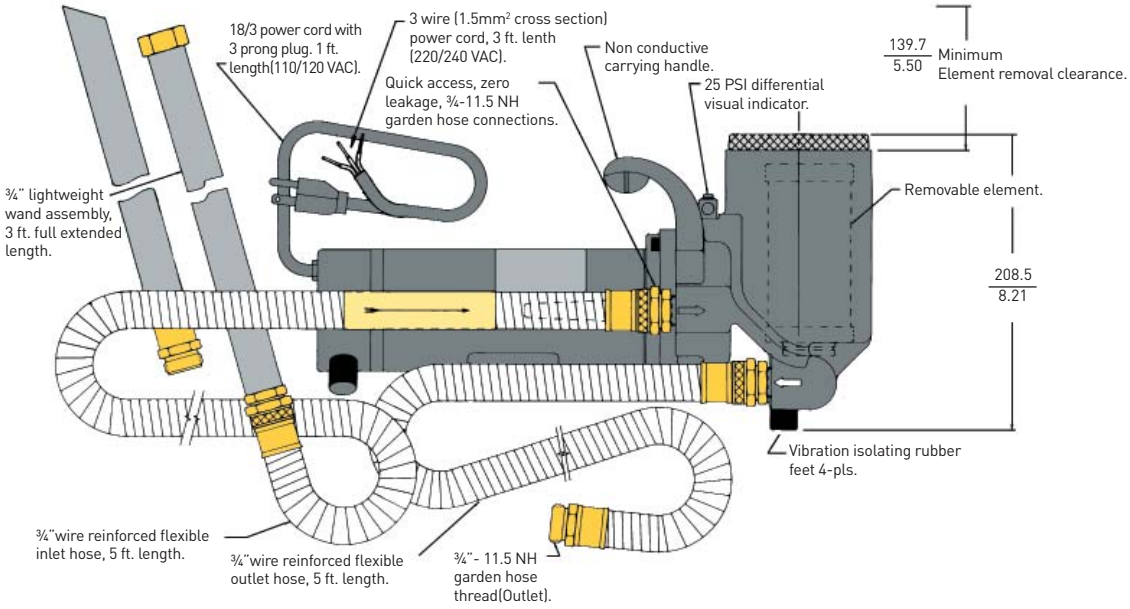

Linear Measure: millimeter / inch

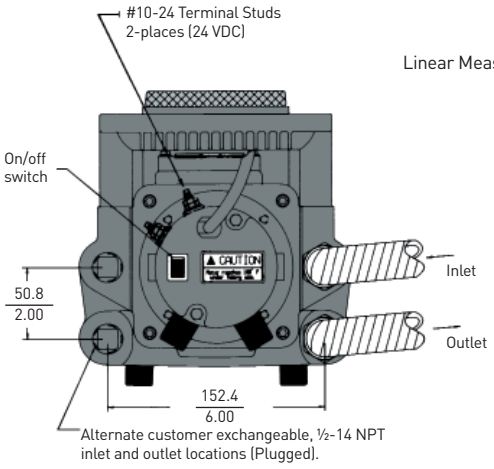

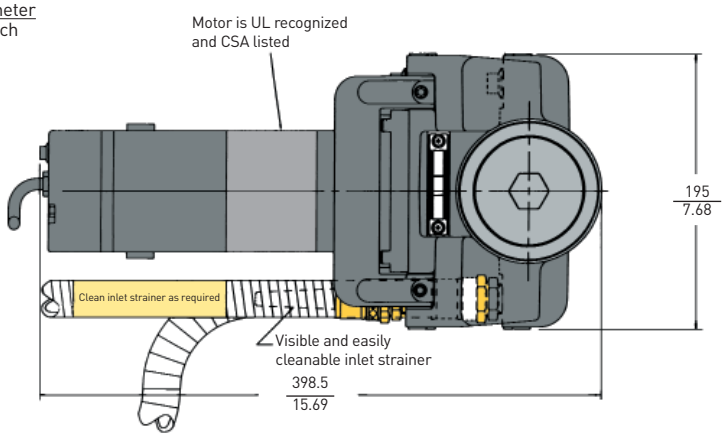

Guardian Series

Element Performance

Media Code	Filter Media	Time Averaged Beta x/y/z =2/20/75 Where x/y/z is:	Dirt Capacity (Grams)
74W	Woven Wire	74 micron[1]	*
40W	Woven Wire	40 micron[1]	*
25W	Woven Wire	25 micron[1]	*
20C	Cellulose	20 micron[1]	*
10C	Cellulose	5/8/16	4
20Q	Microglass III	7.1/13.7/17.3	16.2
10Q	Microglass III	2.7/7.3/10.3	14.4
05Q	Microglass III	<2/2.1/4.0	14.9
02Q	Microglass III	<2/<2/<2	14.3

Multipass test run at 4 gpm to 35 psid

[1]Reference ratings only. Not multipass tested due to coarseness.

* Not applicable

Beta Rating	Efficiency at x Particle Size
$B_x = 2$	50.0%
$B_x = 20$	95.0%
$B_x = 75$	98.7%
$B_x = 200$	99.5%
$B_x = 1000$	99.9%

Estimated Guardian Element Life and Cleanliness Levels

The following chart shows typical element life (in gallons of oil passed) and cleanliness levels achieved by standard Parker elements available with the Guardian. Some assumptions have been made.*

Media Code	New Oil ISO	ISO Achieved	Element Life	Elements Used per 250 gallons
10C	22/20/16	21/19/15	120 gallons	2.08
20Q	22/20/16	21/19/15	486 gallons	.51
10Q	22/20/16	19/16/14	407 gallons	.61
05Q	22/20/16	17/15/12	330 gallons	.75
02Q	22/20/16	15/13/10	316 gallons	.79

* 1. New oil is at ISO 22/20/16.
2. No environment or work ingression.
3. Single pass oil transfer.

NOTE: Data for fluid transfer only. For continuous fluid polishing, lower ISO cleanliness levels will be achieved.

Guardian Flow vs. Viscosity Performance

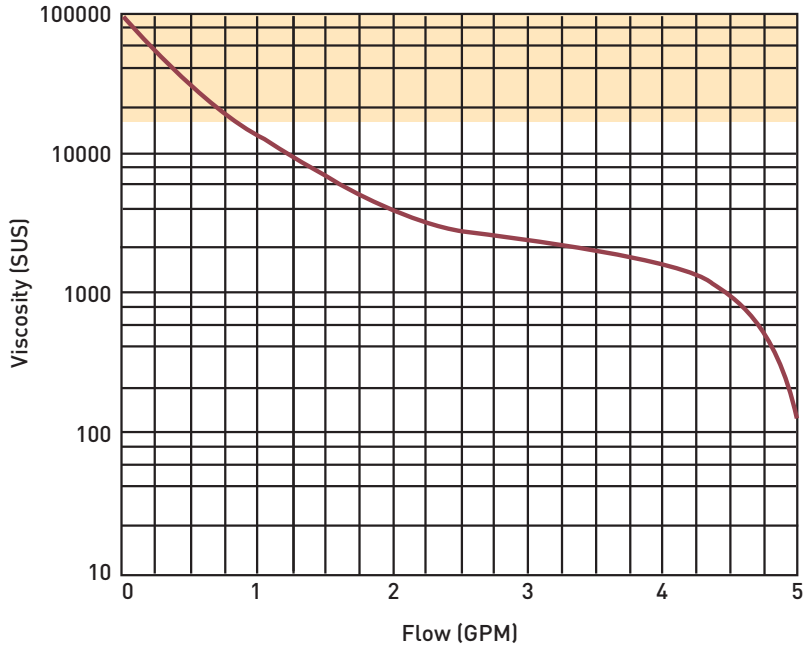

Note 1: Guardian not recommended for fluid viscosities greater than 16,000 SUS (11,000 SUS;24VDC)

Note 2: Flows based on Guardian with no element installed

Guardian Operation

A. Remove all shipping plugs from the hoses and fittings.
B. Connect the inlet and outlet hose assemblies to the unit.
C. Connect the wand assemblies, if required.
D. Place the inlet hose wand assembly into the fluid to be filtered and/or transferred.
E. Place the outlet hose/wand assembly into the container where the fluid discharge is desired.
F. Plug in the unit.
G. Flip the switch on the end of the unit to the "on" position.

NOTE: For no-mess transportation, the inlet and outlet hose assemblies can be screwed together by removing the wand assembly.

Guardian Element Servicing

A. Flip the switch on the end of the unit to the "off" position and disconnect the electrical plug.
B. Rotate the cover counter-clockwise and remove.
C. Remove the element from the housing. Discard all disposable elements. These elements are not cleanable,
D. Place the new element In the housing, fitting the o-ring neck into the large hole at the bottom.
E. Inspect the cover o-ring and replace if necessary.
F. Replace the cover and hand-tighten.

NOTE 1: It is recommended that the Guardian be cleaned and flushed between uses with dissimilar fluids to prevent fluid mixing.
NOTE 2: Motor brushes may require changeout every 500 service hours

Troubleshooting Guide

Problem	Cause	Solution
Does not start.	ON/OFF switch. No electrical power. Rectifier. Motor overheats (160°F). Defective motor.	Turn switch on, replace switch if defective. Plug in Guradian, check for tripped circuit breakers, check for blown fuses. Replace if defective. Allow motor to cool, thernal overload will automatically reset. Replace motor.
Does not start or errattic motor noise.	Worn motor brushes.	Replace motor brushes.
Intermittent start.stop oeration.	High viscosity fluids. Worn motor brushes. Defective motor.	High viscosity fluids can cause the motor to overheat and cycle intermittently. Replace motor grushes. Replace motor.
Hot motor.	Pumping under heavy load. Defective motor.	It is normal, under a heavy pumping load for the motor to reach 160°F. Replace motor if shell temperature reaches greater than 170°F.
No flow or erratic pump noise.	Filter housing not filled with oil. Suction leak. Obstructed outlet. Element dirty. Sheared pump key. Defective Guardian.	Allow Guardian to run a few seconds. Check tghtness of inlet fittings and hoses. Check gaskets are in place and are not damaged. Kink or restriction in the inlet hose. Clear outlet. Replace or clean element. Replace woodruff key. Replace unit.
No flow, erratic pump noise, motor overheats.	Gears binding.	Disassemble Guardian and throroughly clean the gear set. Always use the inlet strainer provided to protect the unit. Replace defective gears.
No suction.	Plugged strainer.	Clean or replace the inlet strainer as required. Clean relief valve. Check for damaged internal o-rings.
Reduced oil flow.	High viscosity fluids. Element dirty. Relief valve sticks or is lodged open. Partially obstructed inlet or outlet hose. Suction leak. Worn gears.	High viscosity fluids can cause reduced flow, which is normal. Replace or clean element. Clean releif valve or replace if defective. Clear the hose obstruction. Check tightness of inlet fittings and hose. Replace gear set.
Indicator moves to RED Area.	Element dirty. Oil extremely cold or viscous. Obstruced outlet. Defective indicator.	Replace or clean element. Change element to coarser micron rating. Clear outlet obstruction. Replace indicator.
Indicator dows not seem to move.	No element. Defective indicator.	Install element. Replace indicator.
Joses discolor or are hard.	Fluid compatibility.	Certain fluids, over time, will cause the hoses to discolor. This does not impair their performance. But, some fluids will cause the hoses to become brittle, requiring replacement.
Oil formation under unit.	Defective shaft seal.	Replace the motor shaft seal.

Guardian Replacement Parts

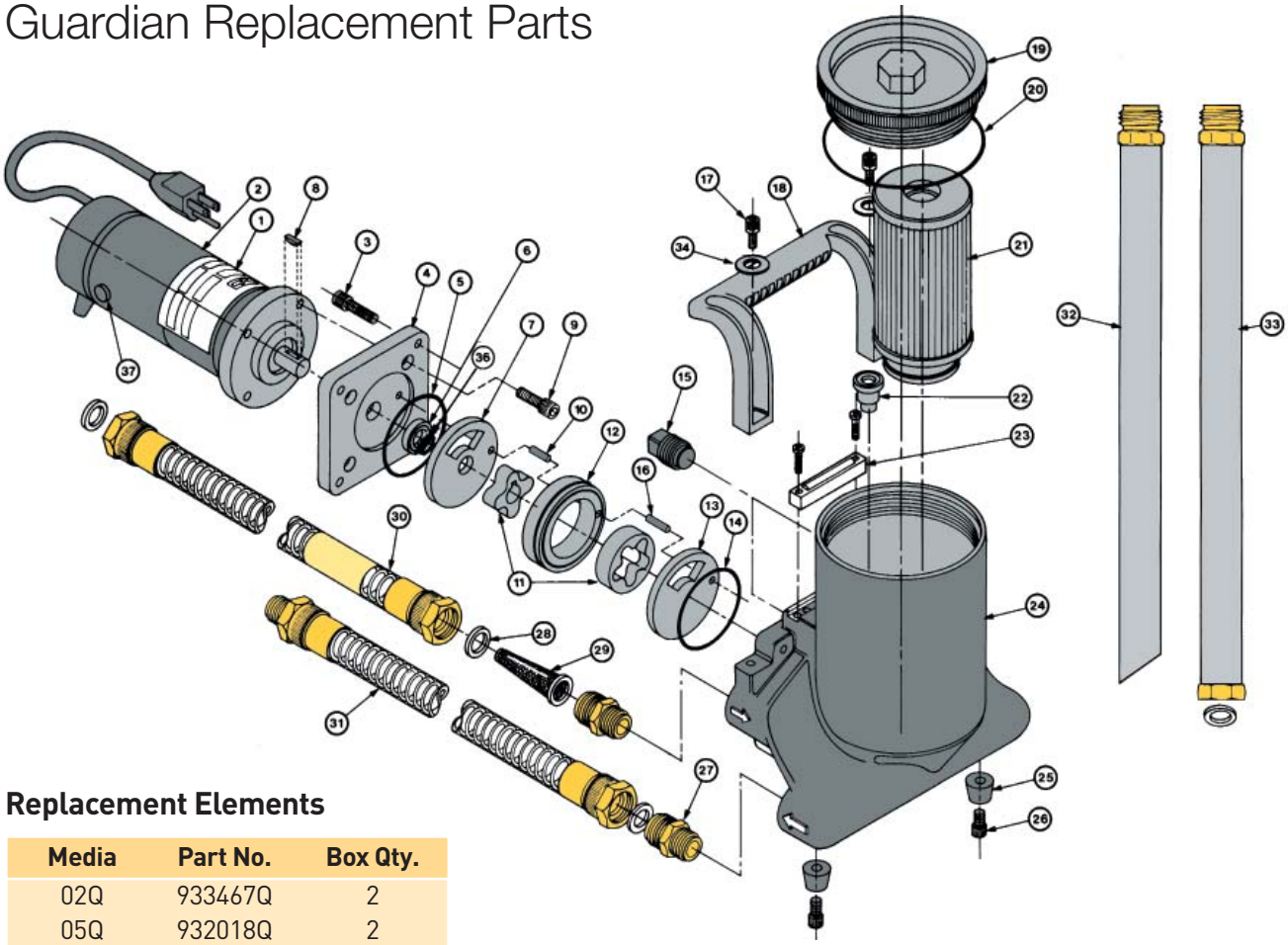

Replacement Elements

Media	Part No.	Box Qty.
02Q	933467Q	2
05Q	932018Q	2
10Q	932017Q	2
20Q	933468Q	2
10C	932016	2
20C	932020	2
25W	922627	1
40W	922628	1
74W	922626	1
WR	932019	2

Parts List

1. Label. . . . . Consult Factory
2. Motor, 110-120 VAC 931913
220-440 VAC 932381
24 VDC. 932759
3. SHCS(4),¼-20x1 902734
4. Adapter Plate 931890
5. Housing O-Ring V72041
6. Polypak Seal 931921
7. Shadow Plate 931899
8. Woodruff Key ⅛ × ⅜ 931877
9. SHCS(4), ¼-20 × ¾ 902679
10. Roll Pin ⅛ × ¾ 903630
11. Geroter Set 931873
12. Geroter Ring 931903
13. Outlet Plate 931900
14. Geroter O-ring V72135
15. Brass Pipe Plug (2) ½-14. 931920
16. Roll Pin ⅛ × ⅝ 903426
17. SHCS (2), ¼-20 × ⅝ 931889
18. Handle 931897
19. Cover 931892
20. Cover O-Ring. V72237
21. Element . . . . . .
22. Relief Valve 928981
23. Indicator Kit. 927422
24. Housing 931838
25. Rubber Bumpers (2) 931888
26. SHCS(2), ¼-20 x ½ 902907
27. Brass Fitting (2) 931928
28. Gasket (4). 931956
29. Inlet Screen. 931927
30. Inlet Hose Assembly 931936
31. Outlet Hose Assembly 931937
32. Wand Crevice Assembly 931965
33. Wand Adapter Assembly 931966
34. Washer (2) 926106
35. Quick Disconnect Kit 932097
(Not Shown)
36. Washer. 932085
37. Brush Kit (110/120) 934329
(220/240 VAC) 934327
(24 VDC) 932761
Seal Kit 932263
Bowl Extension Kit 932081

NOTE: SHCS denotes "socket head cap screw"

Guardian Series

How to Order

Select the desired symbol (in the correct position) to construct a model code.
Example:

BOX 1	BOX 2	BOX 3	BOX 4
	GT4	10C	1

BOX 1: Seals	
Symbol	**Description**
None	**Carboxylated Nitrile (Standard)**
Note: Consult factory for fluids not compatible with fluorocarbon.	

BOX 2: Model	
Symbol	**Description**
GT4	**Guardian® 110/120 VAC**
GT4D	24VDC
GT4E	220/240 VAC

BOX 3: Media	
Symbol	**Description**
74W	Wire Mesh
40W	Wire Mesh
25W	Wire Mesh
10C	**Cellulose**
20Q	Microglass III
10Q	Microglass III
05Q	Microglass III
02Q	Microglass III
WR	Water Removal

BOX 4: Options	
Symbol	**Description**
1	**None**
6	Quick disconnect hose connections

Please note the bolded options reflect standard options with a reduced lead-time. Consult factory on all other lead-time options.

Global products as identified are offered worldwide through all Parker locations and utilize a common ordering code.