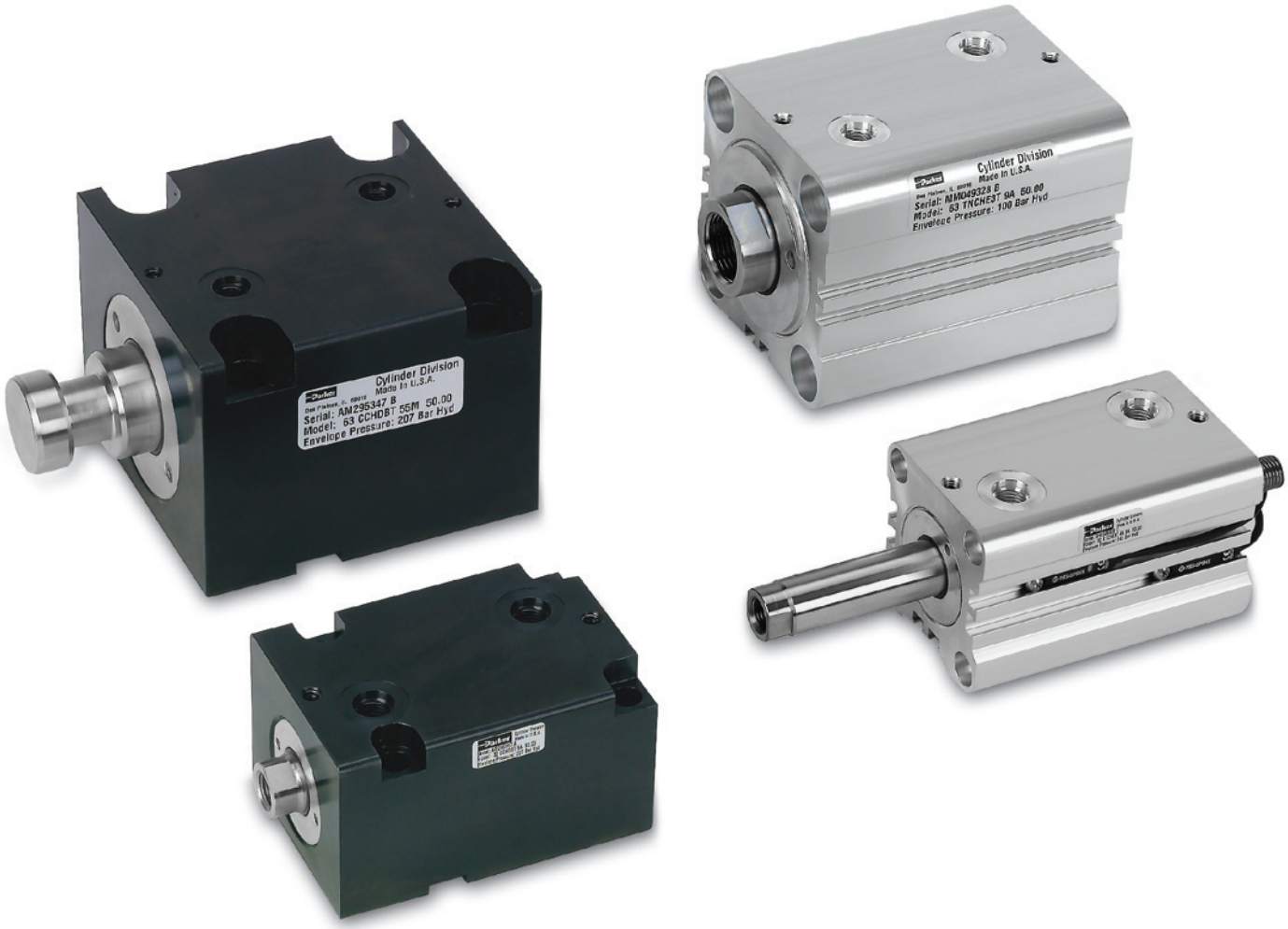

Compact Hydraulic Cylinders

Series CHE / CHD

aerospace
climate control
electromechanical
filtration
fluid & gas handling
hydraulics
pneumatics
process control
sealing & shielding

Parker

ENGINEERING YOUR SUCCESS.

www.comoso.com

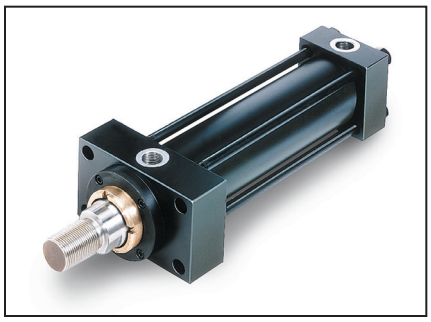

Series HMI

- Bore Sizes 25 through 200mm
- ISO 6020/2 Interchangeable
- 12 Standard Mounting Styles
- 210 Bar Hydraulic Service

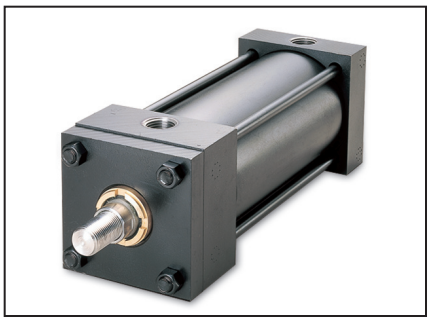

Series 3L

- Bore Sizes 1.00" through 8.00"
- Removable Rod Gland
- 15 Standard Mounting Styles
- 1,000 psi Nominal Hydraulic Service

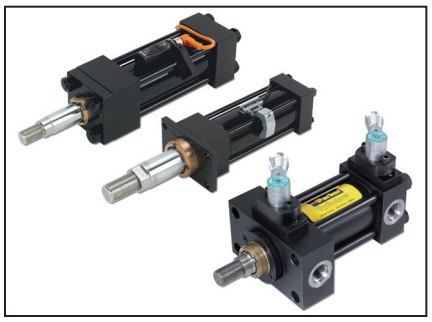

Position Indicating Switches

- Head or cap mounted inductive and magnetic principal switches sense end-of-stroke
- Tie rod mounted switches actuated by a magnetic piston sense mid-stroke
- Available Series 2H, 3L and 2A

In line with our policy of continuing product improvement, specifications and information contained in this catalog are subject to change.

Copyright ©2009-2013 by Parker Hannifin Corporation.
All rights reserved.

PRINTED IN THE U.S.A.

⚠ WARNING

FAILURE OR IMPROPER SELECTION OR IMPROPER USE OF THE PRODUCTS AND/OR SYSTEMS DESCRIBED HEREIN OR RELATED ITEMS CAN CAUSE DEATH, PERSONAL INJURY AND PROPERTY DAMAGE.

This document and other information from the Parker Hannifin Corporation, its subsidiaries and authorized distributors provide product and/or system options for further investigation by users having expertise. It is important that you analyze all aspects of your application, including consequences of any failure and review the information concerning the product or system in the current product catalog. Due to the variety of operating conditions and applications for these products or systems, the user, through its own analysis and testing, is solely responsible for making the final selection of the products and systems and assuring that all performance, safety and warning requirements of the application are met.

The products described herein, including without limitation, product features, specifications, designs, availability and pricing, are subject to change by Parker Hannifin Corporation and its subsidiaries at any time without notice.

Offer of Sale

The items described in this document are hereby offered for sale by Parker Hannifin Corporation, its subsidiaries or its authorized distributors. This offer and its acceptance are governed by provisions stated on a separate page of the document entitled ‘Offer of Sale’.

Parker Hannifin Corporation
Industrial Cylinder Division
Des Plaines, Illinois USA

Table of Contents

Description	*Page*	*Section*
Series CHE Aluminum Body Compact Hydraulic Cylinders	**3-20**	CHE
Cylinder Features	3	
Cylinder Weights and Force	4	
Model Code & Standard Specifications	5	
Mounting Styles	6-13	
Global Position Sensing Switches	14	
Solid State Switches/Wiring Connection	15	
Reed Switches/Wiring Connection	16	
Switch Mounting / End-of-Stroke Location	17	
CPS Sensors	18-19	
Cordsets	20	
Series CHD Steel Body Compact Hydraulic Cylinders	**21-43**	CHD
Cylinder Features	21	
Cylinder Weights and Force	22	
Model Code & Standard Specifications	23	
Mounting Styles	24-41	
End-Of-Stroke Switch – EPS-C	42	
C & CN Mount Manifold Port Interface Machining	43	
Series CHE / CHD	**44-52**	CHE / CHD
Minimum Rod Extension	44	
Cylinder Mounting	45-46	
Parts Identification	47	
Seal Kits/Gland & Cap Spanner Holes	48	
Cylinder Safety Guide	49-50	
Manufacturing Locations	51	
Offer of Sale	52	

www.comoso.com

Parker Hannifin Corporation
Industrial Cylinder Division
Des Plaines, Illinois USA

Choose Series CHE & CHD Compact Hydraulic Cylinders

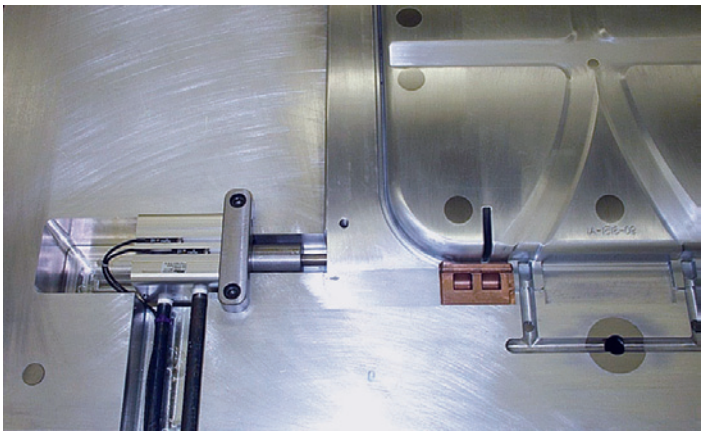

When mounting space is at a premium and the application demands a high force cylinder...

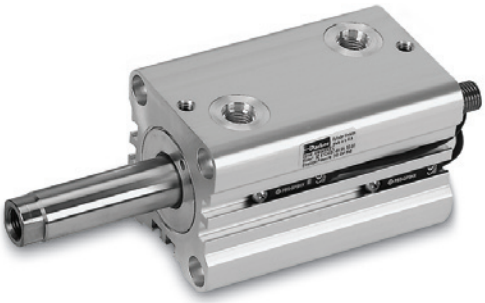

Series CHE is your choice when either End-Of-Stroke, mid-Stroke or continuous cylinder position indication is required and when operating pressures are up to 140 bar (depending on bore size).

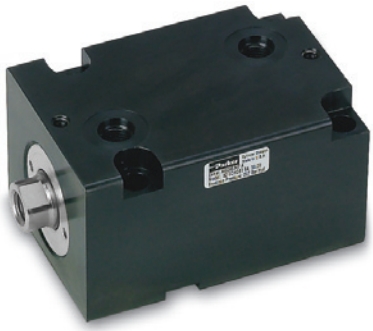

Series CHD steel body cylinders are your best choice for high force requirements with operating pressures up to 207 bar. Available foot mounting with manifold ports enhances machine design flexibility. Optional End-Of-Stroke position indication is available.

www.comoso.com

Series CHE Cylinder Features

Primary Seal – polyurethane rod seal with multiple sealing edges is self-compensating and self relieving to withstand pressure variations and conform to mechanical deflection that may occur.

Piston Rod – Medium carbon steel, hard chrome plated and polished.

Ports – SAE O-ring ports are standard.

OPTIONAL PORTS
NPTF and BSPP ports are also available.

Bi-directional Piston Seal – Polyurethane seal ring with energizer provides leak-free performance.

Non-Metallic Wear Band – improves resistance to bearing loads and provides support for magnet.

Secondary Seal – Rod Wiper – wipes clean any oil film adhering to the rod on the extend stroke and cleans the rod on the return stroke.

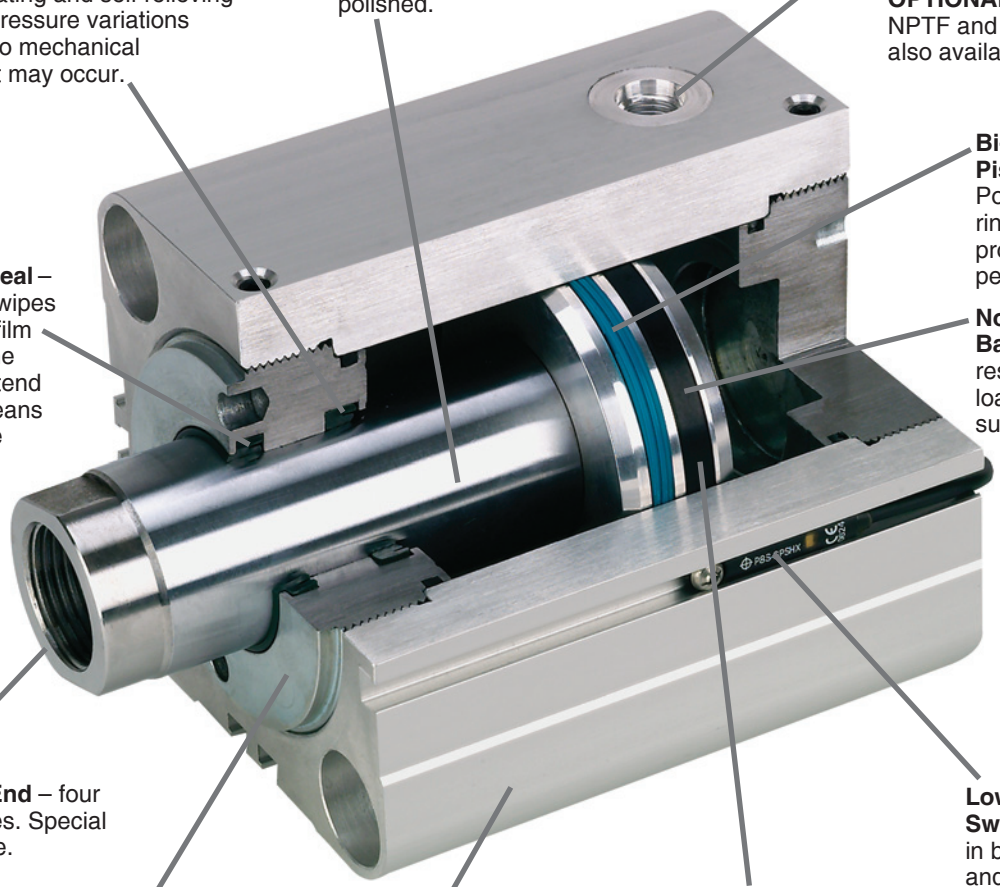

Piston Rod End – four standard styles. Special ends available.

Rod Gland – nodular iron bearing with RoHS compliant zinc plating for corrosion resistance. Optional pilot gland (shown) available at no additional cost.

Cylinder Body – corrosion resistant aluminum alloy. Hard anodized I.D for long wear. Sensor mounting grooves on three sides.

Magnetic Piston Option – for solid state or reed switch actuation.

Low Profile Switches – mount in body grooves and do not extend beyond the cylinder envelope.

CHE Compact Hydraulic Cylinders...
have a lower profile than tie rod construction cylinders with switches installed.

CHE offers mid-stroke piston sensing

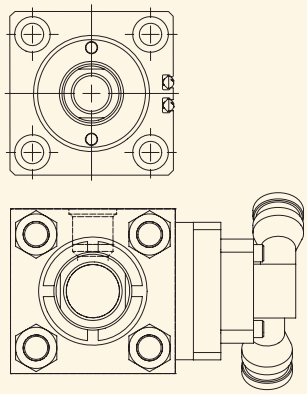

Optional Pilot Gland...
offers added bearing area to increase service life and also improves alignment of cylinder and load.

Standard Gland | **Pilot Gland**

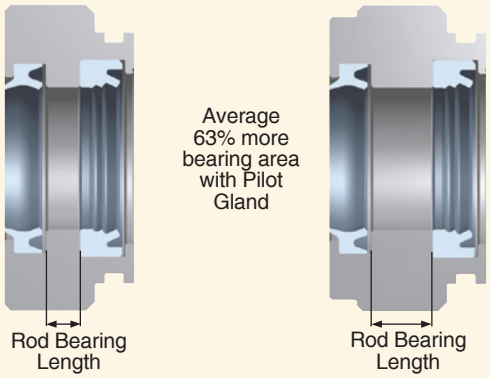

(18mm rod glands depicted)
Use pilot cap to improve alignment for rear mount applications

www.comoso.com

Theoretical Push and Pull Forces

The cylinder output forces are derived from the formula:

$$F = \frac{P \times A}{10000}$$

Where F = Force in kN.
P = Pressure at the cylinder in bar.
A = Effective area of cylinder piston in square mm.

To determine the bore size for the application take the following steps.

1. Select the Operating Pressure column closest to that desired.
2. In the same column, identify the force required to move the load (always rounding up). If the piston rod is in compression use the 'Push' row and if the piston rod is in tension use the 'Pull' row.
3. In the row to the left is the bore required.

If the cylinder envelope dimensions are too large for the application, increase the operating pressure to the maximum pressure in the table below, if possible, and repeat steps 1 - 3.

Push and Pull Force in kN

Bore Ø	Rod Ø	Operating Direction	Piston Area (mm^2)	Operating Pressure (Bar)						
				20	40	60	80	100	120	140
20	12	Push	314	0.63	1.26	1.88	2.51	3.14	3.77	4.40
		Pull	201	0.40	0.80	1.21	1.61	2.01	2.41	2.81
25	14	Push	491	0.98	1.96	2.95	3.93	4.91	5.89	6.87
		Pull	337	0.67	1.35	2.02	2.70	3.37	4.04	4.72
32	18	Push	804	1.61	3.22	4.83	6.43	8.04	9.65	11.3
		Pull	550	1.10	2.20	3.30	4.40	5.50	6.60	7.70
40	22	Push	1,257	2.51	5.03	7.54	10.1	12.6	15.1	17.6
		Pull	877	1.75	3.51	5.26	7.01	8.77	10.5	12.3
50	28	Push	1,963	3.93	7.85	11.8	15.7	19.6	23.6	-
		Pull	1,348	2.70	5.39	8.09	10.8	13.5	16.2	-
63	36	Push	3,117	6.23	12.5	18.7	24.9	31.2	-	-
		Pull	2,099	4.20	8.40	12.6	16.8	21.0	-	-
80	45	Push	5,027	10.1	20.1	30.2	40.2	50.3	-	-
		Pull	3,436	6.87	13.7	20.6	27.5	34.4	-	-
100	56	Push	7,854	15.7	31.4	47.1	62.8	78.5	-	-
		Pull	5,391	10.8	21.6	32.3	43.1	53.9	-	-

Series CHE Pressure Rating

Bore Ø	Maximum Working Pressure in bar
20	140
25	140
32	140
40	140
50	120
63	100
80	100
100	100

Equivalents

1 kN = 224.81 pounds force
1 bar = 14.50 psi
1 mm = .03937 inch
1 mm^2 = .00155 $inch^2$

Cylinder Weights

To determine the weight of a Series CHE cylinder, first select the proper basic zero stroke weight for the mounting required, and then calculate the weight of the cylinder stroke and add the result to the basic weight. For extra rod extension, use piston rod weights per mm in Table C.

Table A Single Rod End CHE Cylinder Weights in kg.

Bore Ø	Rod Ø	Single Rod Cylinders									
		Basic Weight at Zero Stroke				Per mm Stroke	Basic Weight at Zero Stroke				Per mm Stroke
		T		TN, TR			J, H		CA		
		PC 3[1]	PC B[1]	PC 3[1]	PC B[1]		PC 3[1]	PC B[1]	PC 3[1]	PC B[1]	
20	12	0.24	0.25	0.25	0.26	0.004	0.51	0.52	0.48	0.49	0.005
25	14	0.34	0.36	0.35	0.37	0.005	0.71	0.73	0.69	0.71	0.006
32	18	0.62	0.66	0.64	0.68	0.009	1.14	1.18	1.28	1.33	0.009
40	22	0.92	0.99	0.95	1.02	0.011	1.86	1.93	2.00	2.06	0.013
50	28	1.38	1.50	1.44	1.55	0.015	2.97	3.09	3.12	3.24	0.017
63	36	2.33	2.54	2.42	2.62	0.021	4.33	4.54	5.14	5.34	0.025
80	45	4.20	4.66	4.34	4.80	0.031	7.68	8.14	8.67	9.13	0.036
100	56	8.02	8.86	8.23	9.08	0.045	14.7	15.6	15.6	16.4	0.051

Table C Piston rod weights in kg.

Rod Ø	Piston Rod Weight per mm
12	0.001
14	0.001
18	0.002
22	0.003
28	0.005
36	0.008
45	0.012
56	0.019

Table B Double Rod End CHE Cylinder Weights in kg.

Bore Ø	Rod Ø	Double Rod Cylinders									
		Basic Weight at Zero Stroke				Per mm Stroke	Basic Weight at Zero Stroke				Per mm Stroke
		T		TN			J		CA		
		PC 3[1]	PC B[1]	PC 3[1]	PC B[1]		PC 3[1]	PC B[1]	PC 3[1]	PC B[1]	
20	12	0.26	0.28	0.28	0.29	0.005	0.53	0.55	0.50	0.51	0.006
25	14	0.37	0.40	0.39	0.41	0.007	0.75	0.77	0.72	0.75	0.008
32	18	0.68	0.72	0.71	0.75	0.011	1.21	1.25	1.35	1.39	0.011
40	22	1.02	1.09	1.06	1.13	0.014	1.97	2.04	2.10	2.17	0.016
50	28	1.59	1.70	1.64	1.75	0.020	3.18	3.29	3.33	3.44	0.022
63	36	2.75	2.95	2.84	3.04	0.029	4.75	4.95	5.56	5.76	0.033
80	45	5.00	5.45	5.14	5.59	0.043	8.48	8.93	9.47	9.92	0.048
100	56	9.64	10.5	9.86	10.7	0.065	16.3	17.2	17.2	18.1	0.071

Equivalent

1 kg = 2.2046 pounds

Note 1: PC 3 = with Piston Code 3 or 5 (Magnetic Piston), PC B = with Piston Code 9 or B (Non-Magnet Piston)

www.comoso.com

Parker Hannifin Corporation
Industrial Cylinder Division
Des Plaines, Illinois USA

Model Ordering Code for CHE

32		T	CHE	3	T			9		A	25
Bore Dia.	**Double Rod Cylinder**	**Mounting Style**	**Series**	**Piston**	**Ports**	**Seals**	**Special Modification**	**Piston Rod Thread Style**	**Piston Rod Thread Style** (For Dbl. Rod)	**Piston Rod Thread Type**	**Stroke**
Specify: (Bore dia. in mm) 20 25 32 40 50 63 80 100	Use "K" only if double rod cylinder is required.	Specify: T = Std. Mount TN = Std. Mount with pilot gland TR = Std. Mount with cap pilot CA = Side Lug Mount J = Head Rectan-gular Flange H = Cap Rectan-gular Flange	CHE	Specify: 3 = Magnetic piston[1] 5 = Magnetic piston with bronze cap & gland[2] 9 = Non-magnetic piston with bronze cap, & gland B = Non-magnetic piston.	Specify: T = SAE Ports U = NPTF Ports R = BSPP Ports	Leave blank for std. Nitrile Seals V = Fluoro-carbon	Use "S" for Special Modifi-cation other than rod end, and specify modifi-cation.	Specify: 4 = Small Male 8 = Inter-mediate Male 9 = Female 55 = Flange Coupler 3 = Special[3]	Specify: 4 = Small Male 8 = Inter-mediate Male 9 = Female 55 = Flange Coupler 3 = Special[3]	Specify: A = Imperial (UNF or UNC) M = Metric[4]	Specify Stroke Length Required in mm[5].

Shaded boxes identify required model number fields.

[1] Order required Solid State or Reed Switches as separate items. See reed switch & solid state switch pages for specifications and part numbers.

[2] Bronze cap and gland required for CPS linear cylinder position sensor (must be ordered separately).

[3] To order thread style 3, specify "3" and give the desired dimensions for KK, A, and W (or WP or WR depending on mounting) or furnish a dimensioned sketch.

[4] Always use M for rod style 55.

[5] See Maximum Stroke chart at right.

Maximum Stroke

Bore Ø	Stroke[6] in mm	
	Mounting Styles T, TN, TR	Bolt-on Mounting Styles[7] J, H & CA
20	100	50
25	100	75
32	150	100
40	150	100
50	150	100
63	165	100
80	165	100
100	125	100

[6] Intermediate strokes in 1mm increments are available.

[7] Longer strokes (up to maximum lengths for Mounting Styles T, TN & TR) are available at increased manufacturing lead times. Contact the factory.

Standard Specifications

- 6 Standard mounting styles
- Bore sizes – 20mm to 100mm
- Piston Rod Diameter – 12mm to 56mm
- Single and double rod construction available
- Strokes up to 150mm depending on bore size (see table above).
- Working pressure up to 140 bar (depending on bore size)
- Temperature range – -23°C to +121°C (depending on seal class)
- Reference ISO 16656: 2004

Seal Classes	Typical Fluids	Temperature Range
1 – Standard Nitrile & Polyurethane	Hydraulic Oil, MIL-H-5606 Oil	-23°C (-10°F) to +100°C (+212°F)
5 – Optional (At extra cost) Fluorocarbon Seals	High Temperature	-23°C (-10°F) to +121°C (+250°F) Class 5 seals may be operated up to +204°C (+400°F) with reduced service life
Note: Class 5 seals are not suitable for use with Skydrol fluid, but can be used with hydraulic oil if desired.		

www.comoso.com
Parker Hannifin Corporation
Industrial Cylinder Division
Des Plaines, Illinois USA

CHE

Style T Through Bolt Mount – Single Rod End – 20mm to 100mm Bore Size

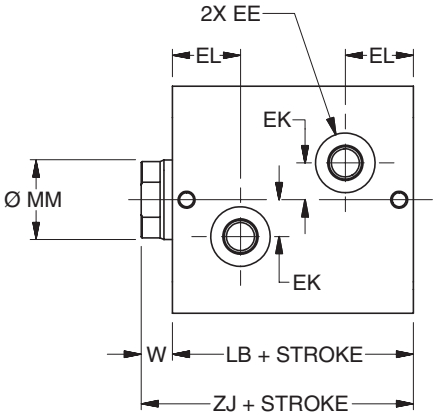

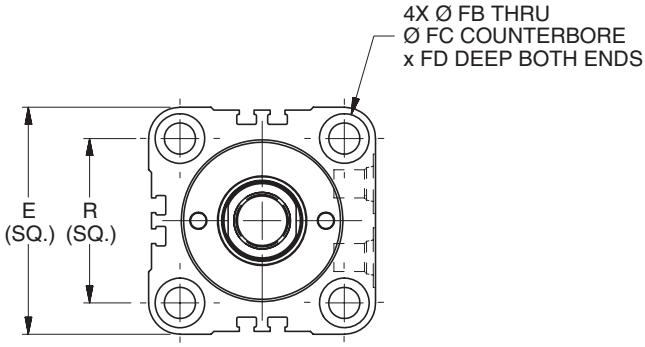

T Mount Single Rod End – Envelope and Mounting Dimensions

Bore Ø	E	EE			EK	EL	FB Ø	FC Ø	FD	R	W	Add Stroke	
		SAE	NPTF	BSP								LB	ZJ
20	43[1]	#2[2]	1/8	G-1/8	6	16.5	5.5	9.5	5.4	30	8	43	51
25	49	#2[2]	1/8	G-1/8	8	17.5	5.5	9.5	5.4	36	8	45	53
32	62	#4	1/4	G-1/4	11	20.5	7	11	6.5	47	10	51	61
40	70	#4	1/4	G-1/4	12	21	9	14	8.6	52	10	55	65
50	80	#4	1/4	G-1/4	14	22.5	11	17.5	10.8	58	11	60	71
63	94	#4	1/4	G-1/4	17	26	13.5	20	13	69	13	67	80
80	114	#6	3/8	G-3/8	20	29.5	16	23	15.2	86	17	78	95
100	138	#6	3/8	G-3/8	25	35	18	26	17.5	106	26	96	122

[1] Port face on 20mm bore is extended 2mm. See port face extension drawing.

[2] Parker Triple-Lok™ Straight Thread Connector SAE #2 to ¼" 37° flare can be used when this port thread is required. Contact your local Parker Tube Fitting distributor and specify part number 4-2 F5OX.

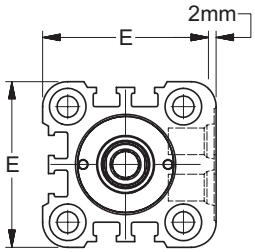

Port Face Extension 20mm Bore Only

T Mount Single Rod End – Rod Dimensions

Bore Ø	MM Rod Ø	Rod End														Rod Extension Dimensions		
		Style 9M		Style 4M		Style 9A		Style 4A		Style 8A		Style 55M						
		KK	A	KK	A	KK	A	KK	A	CC	A	AD	AE	AF	AM	C	D	NA
20	12	M8x1.25	10	M8x1	14	5/16-24	10	5/16-24	14	3/8-24	16	8	3	6	11	6	10	11
25	14	M10x1.5	12	M10x1.25	16	3/8-24	12	3/8-24	16	1/2-20	18	12	4	8	13	6	12	13
32	18	M12x1.75	15	M12x1.25	18	7/16-20	15	7/16-20	18	9/16-18	25	16	6	10	16	8	15	17
40	22	M16x2	20	M16x1.5	22	5/8-18	20	5/8-18	22	3/4-16	30	20	8	12	20	8	19	21
50	28	M20x2.5	24	M20x1.5	28	3/4-16	24	3/4-16	28	7/8-14	35	24	10	16	25	9	24	27
63	36	M27x3	30	M27x2	36	1-14	30	1-14	36	1 1/4-12	45	28	12	22	33	11	32	35
80	45	M33x3.5	35	M33x2	45	1 1/4-12	35	1 1/4-12	45	1 1/2-12	56	34	14	28	41	13	39	43
100	56	M42x4.5	45	M42x2	56	1 1/2-12	45	1 1/2-12	56	1 3/4-12	70	42	16	35	52	22	48	54

Rod End Dimensions

Thread Style 4

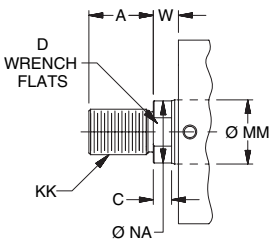

Thread Style 8

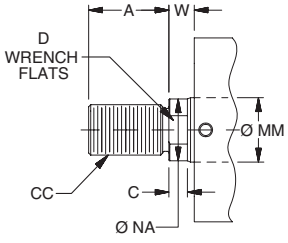

Thread Style 9

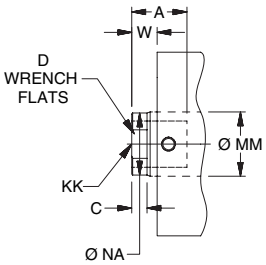

Style 55

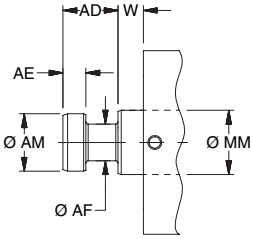

"Special" Thread Style 3

Special thread, extension, rod eye, blank, etc. are also available.

To order, specify "Style 3" and give desired dimensions for KK, A, & W. If otherwise special furnish dimensional sketch.

www.comoso.com

Parker Hannifin Corporation
Industrial Cylinder Division
Des Plaines, Illinois USA

Style T Through Bolt Mount – Double Rod End – 20mm to 100mm Bore Size

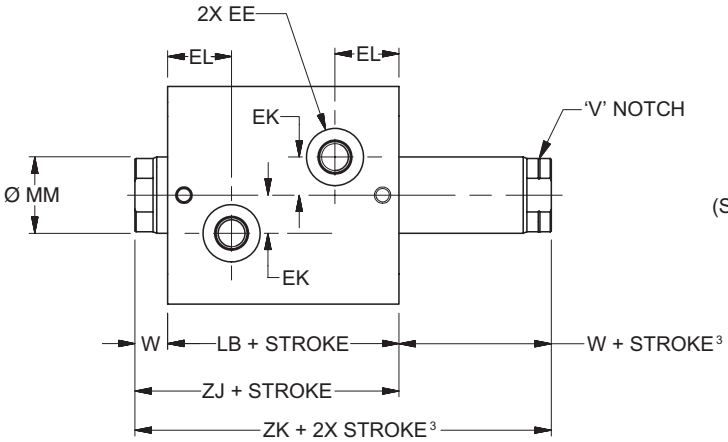

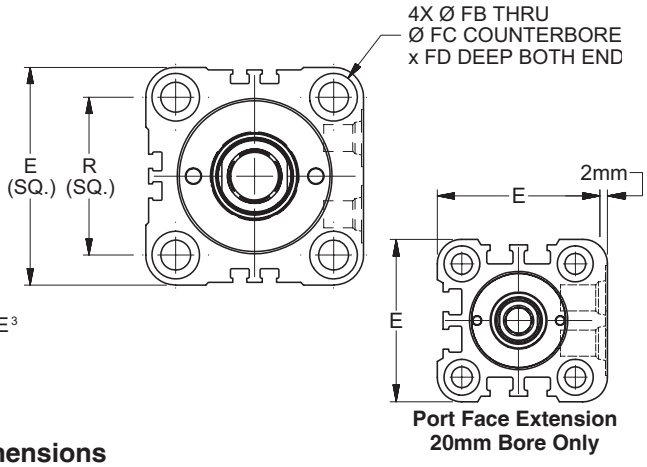

T Mount Double Rod End – Envelope and Mounting Dimensions

Bore Ø	E	EE			EK	EL	FB Ø	FC Ø	FD	LB	R	W³	Add Stroke		Add 2X Stroke
		SAE	NPTF	BSP									LB	ZJ	ZK³
20	43¹	#2²	1/8	G-1/8	6	16.5	5.5	9.5	5.4	43	30	8	43	51	59
25	49	#2²	1/8	G-1/8	8	17.5	5.5	9.5	5.4	45	36	8	45	53	61
32	62	#4	1/4	G-1/4	11	20.5	7	11	6.5	51	47	10	51	61	71
40	70	#4	1/4	G-1/4	12	21	9	14	8.6	55	52	10	55	65	75
50	80	#4	1/4	G-1/4	14	22.5	11	17.5	10.8	60	58	11	60	71	82
63	94	#4	1/4	G-1/4	17	26	13.5	20	13	67	69	13	67	80	93
80	114	#6	3/8	G-3/8	20	29.5	16	23	15.2	78	86	17	78	95	112
100	138	#6	3/8	G-3/8	25	35	18	26	17.5	96	106	26	96	122	148

[1] Port face on 20mm bore is extended 2mm. See port face extension drawing.
[2] Parker Triple-Lok™ Straight Thread Connector SAE #2 to ¼" 37° flare can be used when this port thread is required. Contact your local Parker Tube Fitting distributor and specify part number 4-2 F5OX.
[3] Minimum 'W + Stroke' on V notch rod side may apply. See minimum rod extension page for details.

T Mount Double Rod End – Rod Dimensions

Bore Ø	MM Rod Ø	Rod End														Rod Extension Dimensions		
		Style 9M³		Style 4M		Style 9A³		Style 4A		Style 8A		Style 55M						
		KK	A	KK	A	KK	A	KK	A	CC	A	AD	AE	AF	AM	C	D	NA
20	12	M8x1.25	10	M8x1	14	5/16-24	10	5/16-24	14	3/8-24	16	8	3	6	11	6	10	11
25	14	M10x1.5	12	M10x1.25	16	3/8-24	12	3/8-24	16	1/2-20	18	12	4	8	13	6	12	13
32	18	M12x1.75	15	M12x1.25	18	7/16-20	15	7/16-20	18	9/16-18	25	16	6	10	16	8	15	17
40	22	M16x2	20	M16x1.5	22	5/8-18	20	5/8-18	22	3/4-16	30	20	8	12	20	8	19	21
50	28	M20x2.5	24	M20x1.5	28	3/4-16	24	3/4-16	28	7/8-14	35	24	10	16	25	9	24	27
63	36	M27x3	30	M27x2	36	1-14	30	1-14	36	1 1/4-12	45	28	12	22	33	11	32	35
80	45	M33x3.5	35	M33x2	45	1 1/4-12	35	1 1/4-12	45	1 1/2-12	56	34	14	28	41	13	39	43
100	56	M42x4.5	45	M42x2	56	1 1/2-12	45	1 1/2-12	56	1 3/4-12	70	42	16	35	52	22	48	54

Rod End Dimensions

Thread Style 4

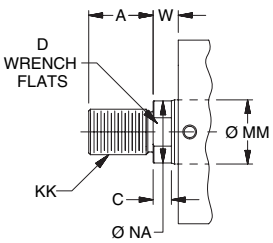

Thread Style 8

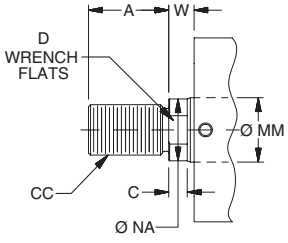

Thread Style 9

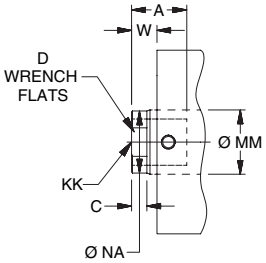

Style 55

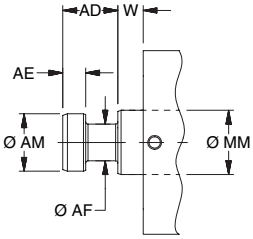

"Special" Thread Style 3

Special thread, extension, rod eye, blank, etc. are also available.

To order, specify "Style 3" and give desired dimensions for KK, A, & W. If otherwise special furnish dimensional sketch.

www.comoso.com

Parker Hannifin Corporation
Industrial Cylinder Division
Des Plaines, Illinois USA

CHE

Styles TN and TR Through Bolt Mount with Pilot Gland or Pilot Cap – Single Rod End – 20mm to 100mm Bore Size

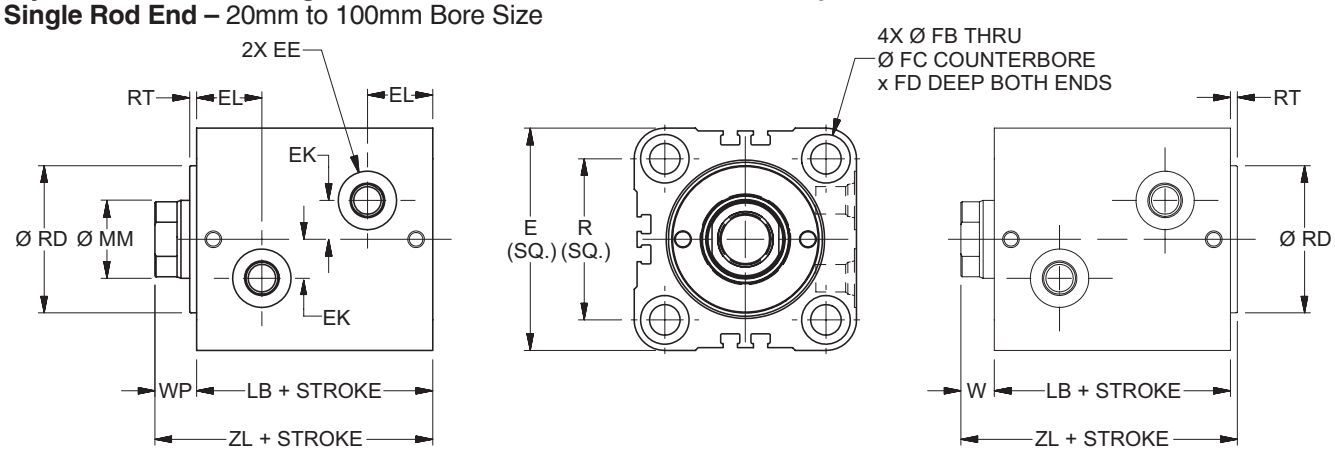

Style TN Pilot Gland Mount **Style TR Pilot Cap Mount**

TN and TR Mount Single Rod End – Envelope and Mounting Dimensions

Bore Ø	E	EE			EK	EL	FB Ø	FC Ø	FD	R	RD Ø f9	RT	W	WP	Add Stroke	
		SAE	NPTF	BSP											LB	ZL
20	43[1]	#2[2]	1/8	G-1/8	6	16.5	5.5	9.5	5.4	30	24	3	8	11	43	54
25	49	#2[2]	1/8	G-1/8	8	17.5	5.5	9.5	5.4	36	27	3	8	11	45	56
32	62	#4	1/4	G-1/4	11	20.5	7	11	6.5	47	36	3	10	13	51	64
40	70	#4	1/4	G-1/4	12	21	9	14	8.6	52	43	3	10	13	55	68
50	80	#4	1/4	G-1/4	14	22.5	11	17.5	10.8	58	53	3	11	14	60	74
63	94	#4	1/4	G-1/4	17	26	13.5	20	13	69	66	3	13	16	67	83
80	114	#6	3/8	G-3/8	20	29.5	16	23	15.2	86	83	3	17	20	78	98
100	138	#6	3/8	G-3/8	25	35	18	26	17.5	106	103	3	26	29	96	125

[1] Port face on 20mm bore is extended 2mm. See port face extension drawing on T Mount page.

[2] Parker Triple-Lok™ Straight Thread Connector SAE #2 to ¼" 37° flare can be used when this port thread is required. Contact your local Parker Tube Fitting distributor and specify part number 4-2 F5OX.

TN and TR Mount Single Rod End – Rod Dimensions

Bore Ø	MM Rod Ø	Rod End														Rod Extension Dimensions		
		Style 9M		Style 4M		Style 9A		Style 4A		Style 8A		Style 55M						
		KK	A	KK	A	KK	A	KK	A	CC	A	AD	AE	AF	AM	C	D	NA
20	12	M8x1.25	10	M8x1	14	5/16-24	10	5/16-24	14	3/8-24	16	8	3	6	11	6	10	11
25	14	M10x1.5	12	M10x1.25	16	3/8-24	12	3/8-24	16	1/2-20	18	12	4	8	13	6	12	13
32	18	M12x1.75	15	M12x1.25	18	7/16-20	15	7/16-20	18	9/16-18	25	16	6	10	16	8	15	17
40	22	M16x2	20	M16x1.5	22	5/8-18	20	5/8-18	22	3/4-16	30	20	8	12	20	8	19	21
50	28	M20x2.5	24	M20x1.5	28	3/4-16	24	3/4-16	28	7/8-14	35	24	10	16	25	9	24	27
63	36	M27x3	30	M27x2	36	1-14	30	1-14	36	1 1/4-12	45	28	12	22	33	11	32	35
80	45	M33x3.5	35	M33x2	45	1 1/4-12	35	1 1/4-12	45	1 1/2-12	56	34	14	28	41	13	39	43
100	56	M42x4.5	45	M42x2	56	1 1/2-12	45	1 1/2-12	56	1 3/4-12	70	42	16	35	52	22	48	54

Rod End Dimensions

Thread Style 4

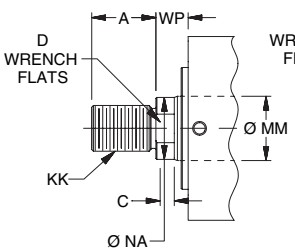

Thread Style 8

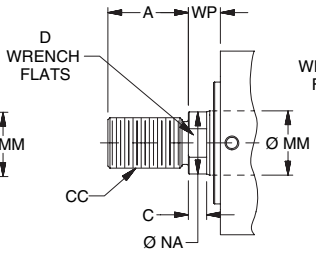

Thread Style 9

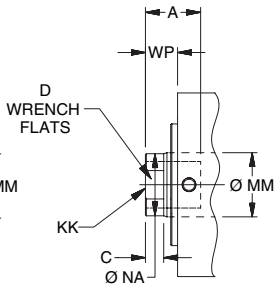

Style 55

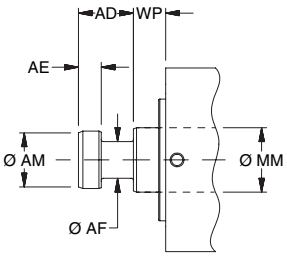

"Special" Thread Style 3

Special thread, extension, rod eye, blank, etc. are also available.

To order, specify "Style 3" and give desired dimensions for KK, A, & W (TR Mount) or WP (TN Mount) If otherwise special furnish dimensional sketch.

www.comoso.com

Parker Hannifin Corporation
Industrial Cylinder Division
Des Plaines, Illinois USA

Style TN Through Bolt Mount with Pilot Gland – Double Rod End – 20mm to 100mm Bore Size

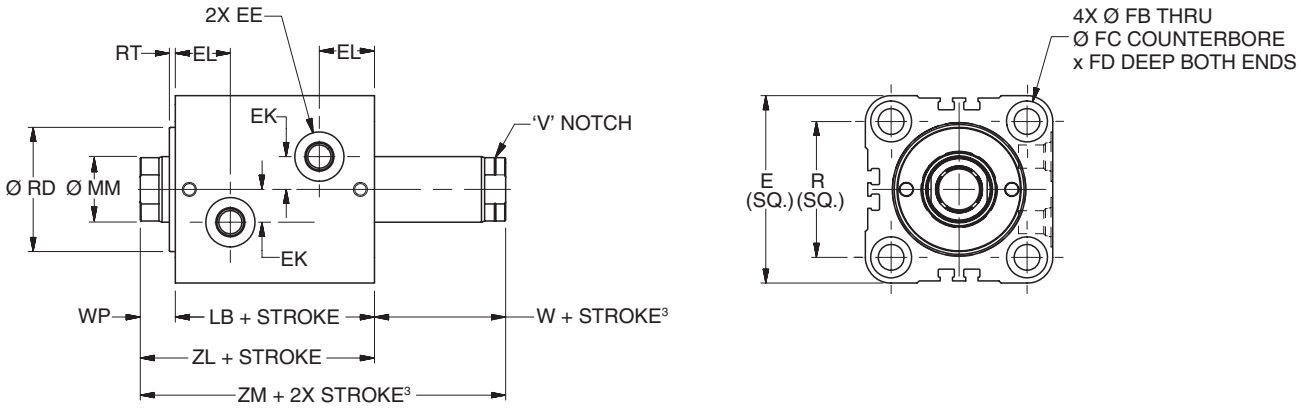

TN Mount Double Rod End – Envelope and Mounting Dimensions

Bore Ø	E	EE			EK	EL	FB Ø	FC Ø	FD	R	RD Ø f9	RT	W³	WP	Add Stroke		Add 2X Stroke
		SAE	NPTF	BSP											LB	ZL	ZM³
20	43¹	#2²	1/8	G-1/8	6	16.5	5.5	9.5	5.4	30	24	3	8	11	43	54	62
25	49	#2²	1/8	G-1/8	8	17.5	5.5	9.5	5.4	36	27	3	8	11	45	56	64
32	62	#4	1/4	G-1/4	11	20.5	7	11	6.5	47	36	3	10	13	51	64	74
40	70	#4	1/4	G-1/4	12	21	9	14	8.6	52	43	3	10	13	55	68	78
50	80	#4	1/4	G-1/4	14	22.5	11	17.5	10.8	58	53	3	11	14	60	74	85
63	94	#4	1/4	G-1/4	17	26	13.5	20	13	69	66	3	13	16	67	83	96
80	114	#6	3/8	G-3/8	20	29.5	16	23	15.2	86	83	3	17	20	78	98	115
100	138	#6	3/8	G-3/8	25	35	18	26	17.5	106	103	3	26	29	96	125	151

[1] Port face on 20mm bore is extended 2mm. See port face extension drawing on T Mount page.
[2] Parker Triple-Lok™ Straight Thread Connector SAE #2 to ¼" 37° flare can be used when this port thread is required. Contact your local Parker Tube Fitting distributor and specify part number 4-2 F5OX.
[3] Minimum 'W + Stroke' on V notch rod side may apply. See minimum rod extension page for details.

TN Mount Double Rod End – Rod Dimensions

Bore Ø	MM Rod Ø	Rod End														Rod Extension Dimensions		
		Style 9M³		Style 4M		Style 9A³		Style 4A		Style 8A		Style 55M						
		KK	A	KK	A	KK	A	KK	A	CC	A	AD	AE	AF	AM	C	D	NA
20	12	M8x1.25	10	M8x1	14	5/16-24	10	5/16-24	14	3/8-24	16	8	3	6	11	6	10	11
25	14	M10x1.5	12	M10x1.25	16	3/8-24	12	3/8-24	16	1/2-20	18	12	4	8	13	6	12	13
32	18	M12x1.75	15	M12x1.25	18	7/16-20	15	7/16-20	18	9/16-18	25	16	6	10	16	8	15	17
40	22	M16x2	20	M16x1.5	22	5/8-18	20	5/8-18	22	3/4-16	30	20	8	12	20	8	19	21
50	28	M20x2.5	24	M20x1.5	28	3/4-16	24	3/4-16	28	7/8-14	35	24	10	16	25	9	24	27
63	36	M27x3	30	M27x2	36	1-14	30	1-14	36	1 1/4-12	45	28	12	22	33	11	32	35
80	45	M33x3.5	35	M33x2	45	1 1/4-12	35	1 1/4-12	45	1 1/2-12	56	34	14	28	41	13	39	43
100	56	M42x4.5	45	M42x2	56	1 1/2-12	45	1 1/2-12	56	1 3/4-12	70	42	16	35	52	22	48	54

Rod End Dimensions

Thread Style 4

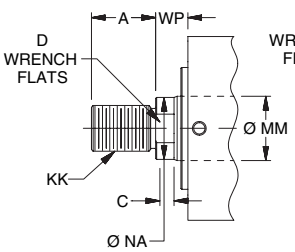

Thread Style 8

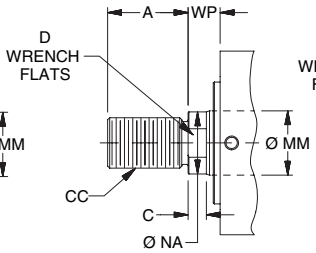

Thread Style 9

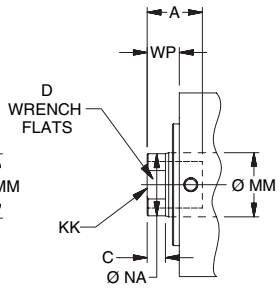

Style 55

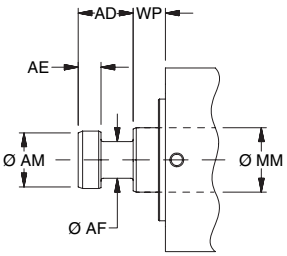

"Special" Thread Style 3

Special thread, extension, rod eye, blank, etc. are also available.

To order, specify "Style 3" and give desired dimensions for KK, A, & WP. If otherwise special furnish dimensional sketch.

www.comoso.com

Parker Hannifin Corporation
Industrial Cylinder Division
Des Plaines, Illinois USA

CHE

Styles J Rectangular Head Flange & H Rectangular Cap Flange Mounts – Single Rod End – 20mm to 100mm Bore Size

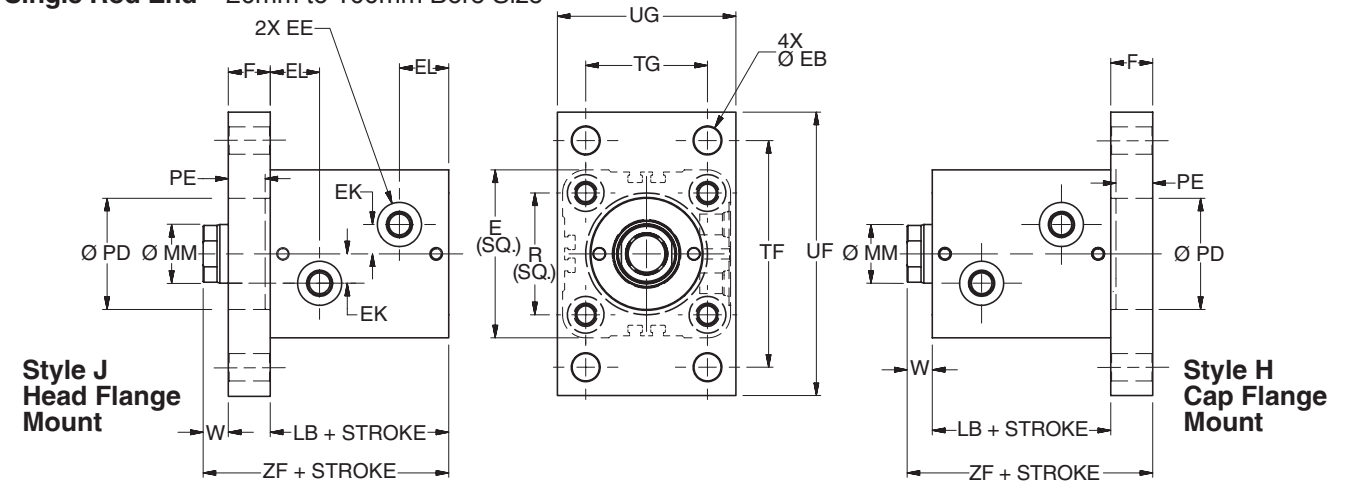

J & H Mounts Single Rod End – Envelope and Mounting Dimensions

Bore Ø	E	EE			EK	EL	F	EB Ø	PD Ø H9	PE	R	TF	TG	UF	UG	W	Add Stroke	
		SAE	NPTF	BSP													LB	ZF
20	43[1]	#2[2]	1/8	G-1/8	6	16.5	10	5.5	24	7	30	60	30	75	46	8	43	61
25	49	#2[2]	1/8	G-1/8	8	17.5	12	5.5	27	9	36	66	36	80	52	8	45	65
32	62	#4	1/4	G-1/4	11	20.5	12	6.8	36	9	47	80	40	95	62	10	51	73
40	70	#4	1/4	G-1/4	12	21	16	11	43	13	52	96	46	118	70	10	55	81
50	80	#4	1/4	G-1/4	14	22.5	20	13.5	53	17	58	108	58	135	85	11	60	91
63	94	#4	1/4	G-1/4	17	26	20	15	66	17	69	124	65	150	98	13	67	100
80	114	#6	3/8	G-3/8	20	29.5	25	17	83	21	86	154	87	185	118	17	78	120
100	138	#6	3/8	G-3/8	25	35	30	21.5	103	27	106	190	109	230	150	26	96	152

[1] Port face on 20mm bore is extended 2mm. See port face extension drawing on T Mount page.

[2] Parker Triple-Lok™ Straight Thread Connector SAE #2 to ¼" 37° flare can be used when this port thread is required. Contact your local Parker Tube Fitting distributor and specify part number 4-2 F5OX.

J & H Mounts Single Rod End – Rod Dimensions

Bore Ø	MM Rod Ø	Rod End														Rod Extension Dimensions		
		Style 9M		Style 4M		Style 9A		Style 4A		Style 8A		Style 55M						
		KK	A	KK	A	KK	A	KK	A	CC	A	AD	AE	AF	AM	C	D	NA
20	12	M8x1.25	10	M8x1	14	5/16-24	10	5/16-24	14	3/8-24	16	8	3	6	11	6	10	11
25	14	M10x1.5	12	M10x1.25	16	3/8-24	12	3/8-24	16	1/2-20	18	12	4	8	13	6	12	13
32	18	M12x1.75	15	M12x1.25	18	7/16-20	15	7/16-20	18	9/16-18	25	16	6	10	16	8	15	17
40	22	M16x2	20	M16x1.5	22	5/8-18	20	5/8-18	22	3/4-16	30	20	8	12	20	8	19	21
50	28	M20x2.5	24	M20x1.5	28	3/4-16	24	3/4-16	28	7/8-14	35	24	10	16	25	9	24	27
63	36	M27x3	30	M27x2	36	1-14	30	1-14	36	1 1/4-12	45	28	12	22	33	11	32	35
80	45	M33x3.5	35	M33x2	45	1 1/4-12	35	1 1/4-12	45	1 1/2-12	56	34	14	28	41	13	39	43
100	56	M42x4.5	45	M42x2	56	1 1/2-12	45	1 1/2-12	56	1 3/4-12	70	42	16	35	52	22	48	54

Rod End Dimensions

Thread Style 4

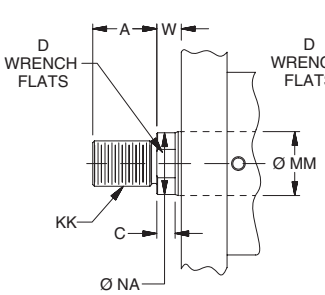

Thread Style 8

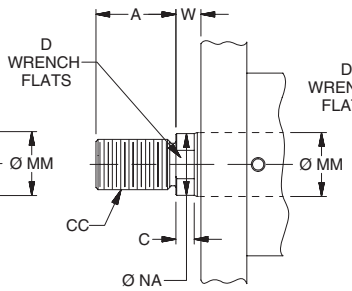

Thread Style 9

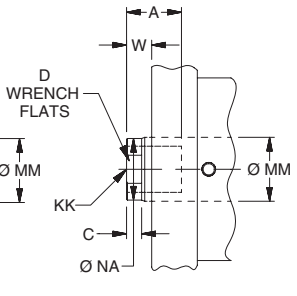

Style 55

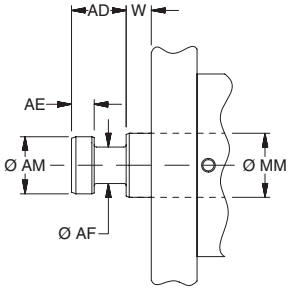

"Special" Thread Style 3

Special thread, extension, rod eye, blank, etc. are also available.

To order, specify "Style 3" and give desired dimensions for KK, A, & W. If otherwise special furnish dimensional sketch.

www.comoso.com

Parker Hannifin Corporation
Industrial Cylinder Division
Des Plaines, Illinois USA

CHE

Style J Rectangular Head Flange Mount – Double Rod End – 20mm to 100mm Bore Size

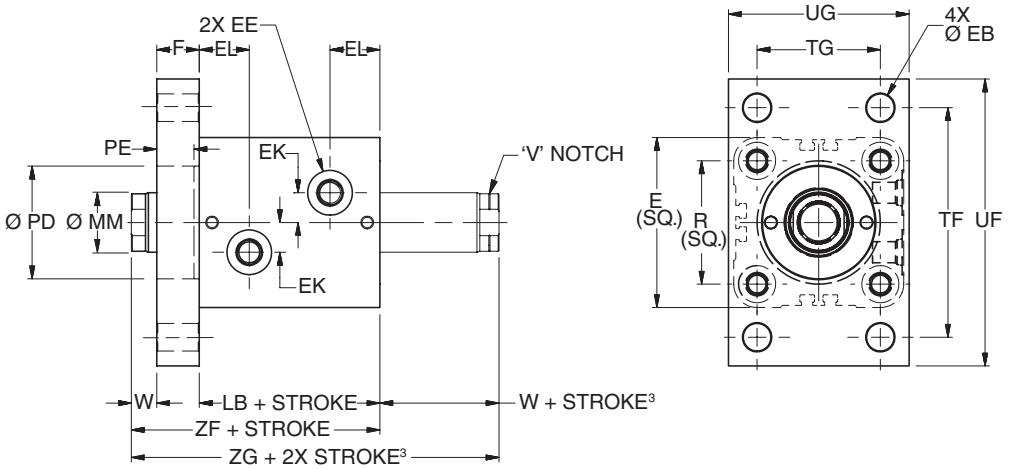

J Mount Double Rod End – Envelope and Mounting Dimensions

Bore Ø	E	EE			EK	EL	F	EB Ø	PD Ø H9	PE	R	TF	TG	UF	UG	W[3]	Add Stroke		Add 2X Stroke
		SAE	NPTF	BSP													LB	ZF	ZG[3]
20	43[1]	#2[2]	1/8	G-1/8	6	16.5	10	5.5	24	7	30	60	30	75	46	8	43	61	69
25	49	#2[2]	1/8	G-1/8	8	17.5	12	5.5	27	9	36	66	36	80	52	8	45	65	73
32	62	#4	1/4	G-1/4	11	20.5	12	6.8	36	9	47	80	40	95	62	10	51	73	83
40	70	#4	1/4	G-1/4	12	21	16	11	43	13	52	96	46	118	70	10	55	81	91
50	80	#4	1/4	G-1/4	14	22.5	20	13.5	53	17	58	108	58	135	85	11	60	91	102
63	94	#4	1/4	G-1/4	17	26	20	15	66	17	69	124	65	150	98	13	67	100	113
80	114	#6	3/8	G-3/8	20	29.5	25	17	83	21	86	154	87	185	118	17	78	120	137
100	138	#6	3/8	G-3/8	25	35	30	21.5	103	27	106	190	109	230	150	26	96	152	178

[1] Port face on 20mm bore is extended 2mm. See port face extension drawing on T Mount page.

[2] Parker Triple-Lok™ Straight Thread Connector SAE #2 to ¼" 37° flare can be used when this port thread is required. Contact your local Parker Tube Fitting distributor and specify part number 4-2 F5OX.

[3] Minimum 'W + Stroke' on V notch rod side may apply. See minimum rod extension page for details.

J Mount Double Rod End – Rod Dimensions

Bore Ø	MM Rod Ø	Rod End														Rod Extension Dimensions		
		Style 9M[3]		Style 4M		Style 9A[3]		Style 4A		Style 8A		Style 55M						
		KK	A	KK	A	KK	A	KK	A	CC	A	AD	AE	AF	AM	C	D	NA
20	12	M8x1.25	10	M8x1	14	5/16-24	10	5/16-24	14	3/8-24	16	8	3	6	11	6	10	11
25	14	M10x1.5	12	M10x1.25	16	3/8-24	12	3/8-24	16	1/2-20	18	12	4	8	13	6	12	13
32	18	M12x1.75	15	M12x1.25	18	7/16-20	15	7/16-20	18	9/16-18	25	16	6	10	16	8	15	17
40	22	M16x2	20	M16x1.5	22	5/8-18	20	5/8-18	22	3/4-16	30	20	8	12	20	8	19	21
50	28	M20x2.5	24	M20x1.5	28	3/4-16	24	3/4-16	28	7/8-14	35	24	10	16	25	9	24	27
63	36	M27x3	30	M27x2	36	1-14	30	1-14	36	1 1/4-12	45	28	12	22	33	11	32	35
80	45	M33x3.5	35	M33x2	45	1 1/4-12	35	1 1/4-12	45	1 1/2-12	56	34	14	28	41	13	39	43
100	56	M42x4.5	45	M42x2	56	1 1/2-12	45	1 1/2-12	56	1 3/4-12	70	42	16	35	52	22	48	54

Rod End Dimensions

Thread Style 4

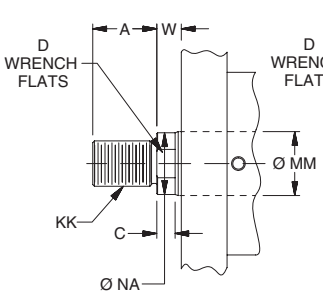

Thread Style 8

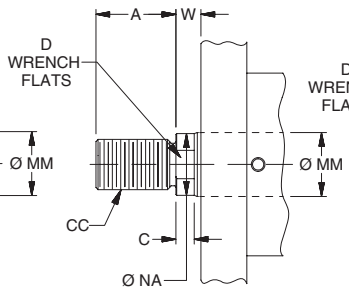

Thread Style 9

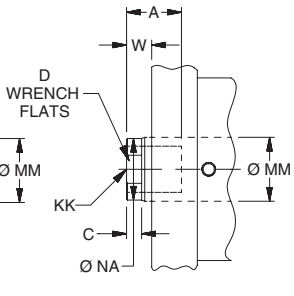

Style 55

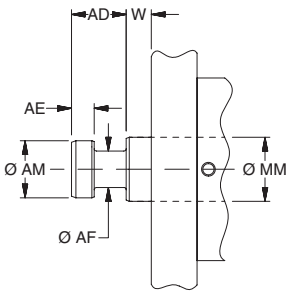

"Special" Thread Style 3

Special thread, extension, rod eye, blank, etc. are also available.

To order, specify "Style 3" and give desired dimensions for KK, A, & W. If otherwise special furnish dimensional sketch.

www.comoso.com

Parker Hannifin Corporation
Industrial Cylinder Division
Des Plaines, Illinois USA

Style CA Side Lug Mount – Single Rod End – 20mm to 100mm Bore Size

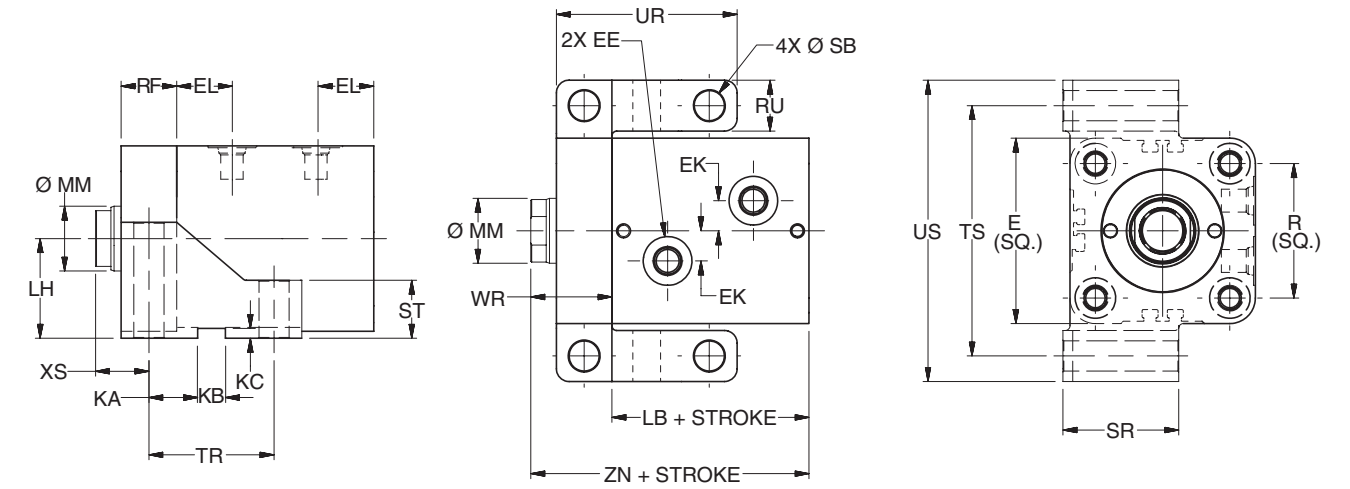

CA Mount Single Rod End – Envelope and Mounting Dimensions

Bore	E	EE			EK	EL	KA	KB	KC	LH	R	RF	RU	SB Ø	SR	ST	TR	TS	UR	US	WR	XS	Add Stroke	
		SAE	NPTF	BSP																			LB	ZN
20	43[1]	#2[2]	1/8	G-1/8	6	16.5	12	5	2.75	24	30	10	10	5.5	25	10	29	58	39	68	18	13	43	61
25	49	#2[2]	1/8	G-1/8	8	17.5	13.5	6	3.25	27	36	12	12	6.8	30	12	33	66	45	78	20	14	45	65
32	62	#4	1/4	G-1/4	11	20.5	16.5	8	3.75	34	47	16	15	9	35	15	41	82	57	97	26	18	51	77
40	70	#4	1/4	G-1/4	12	21	18.5	10	4.25	38	52	20	18	11	40	20	47	94	67	112	30	20	55	85
50	80	#4	1/4	G-1/4	14	22.5	21	12	4.25	43	58	24	22	13.5	50	25	54	108	78	130	35	23	60	95
63	94	#4	1/4	G-1/4	17	26	25	14	4.75	51	69	28	26	16	60	30	64	128	92	154	41	27	67	108
80	114	#6	3/8	G-3/8	20	29.5	30	16	5.25	61	86	32	30	18	70	35	76	152	108	182	49	33	78	127
100	138	#6	3/8	G-3/8	25	35	36.5	20	6.25	75	106	38	36	22	80	40	93	186	131	222	64	45	96	160

[1] Port face on 20mm bore is extended 2mm. See port face extension drawing on T Mount page.

[2] Parker Triple-Lok™ Straight Thread Connector SAE #2 to ¼" 37° flare can be used when this port thread is required. Contact your local Parker Tube Fitting distributor and specify part number 4-2 F5OX.

CA Mount Single Rod End – Rod Dimensions

Bore Ø	MM Rod Ø	Rod End														Rod Extension Dimensions		
		Style 9M		Style 4M		Style 9A		Style 4A		Style 8A		Style 55M						
		KK	A	KK	A	KK	A	KK	A	CC	A	AD	AE	AF	AM	C	D	NA
20	12	M8x1.25	10	M8x1	14	5/16-24	10	5/16-24	14	3/8-24	16	8	3	6	11	6	10	11
25	14	M10x1.5	12	M10x1.25	16	3/8-24	12	3/8-24	16	1/2-20	18	12	4	8	13	6	12	13
32	18	M12x1.75	15	M12x1.25	18	7/16-20	15	7/16-20	18	9/16-18	25	16	6	10	16	8	15	17
40	22	M16x2	20	M16x1.5	22	5/8-18	20	5/8-18	22	3/4-16	30	20	8	12	20	8	19	21
50	28	M20x2.5	24	M20x1.5	28	3/4-16	24	3/4-16	28	7/8-14	35	24	10	16	25	9	24	27
63	36	M27x3	30	M27x2	36	1-14	30	1-14	36	1 1/4-12	45	28	12	22	33	11	32	35
80	45	M33x3.5	35	M33x2	45	1 1/4-12	35	1 1/4-12	45	1 1/2-12	56	34	14	28	41	13	39	43
100	56	M42x4.5	45	M42x2	56	1 1/2-12	45	1 1/2-12	56	1 3/4-12	70	42	16	35	52	22	48	54

Rod End Dimensions

Thread Style 4

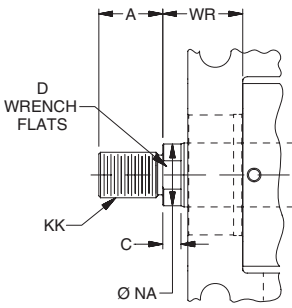

Thread Style 8

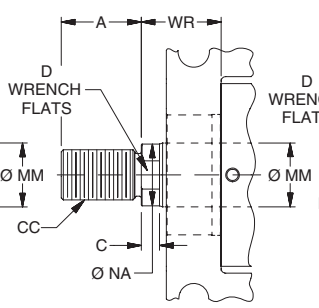

Thread Style 9

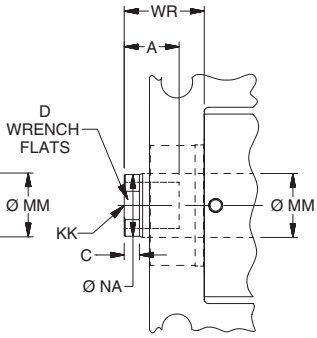

Style 55

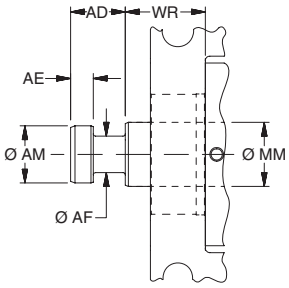

"Special" Thread Style 3

Special thread, extension, rod eye, blank, etc. are also available.

To order, specify "Style 3" and give desired dimensions for KK, A, & WR. If otherwise special furnish dimensional sketch.

www.comoso.com

Style CA Side Lug Mount – Double Rod End – 20mm to 100mm Bore Size

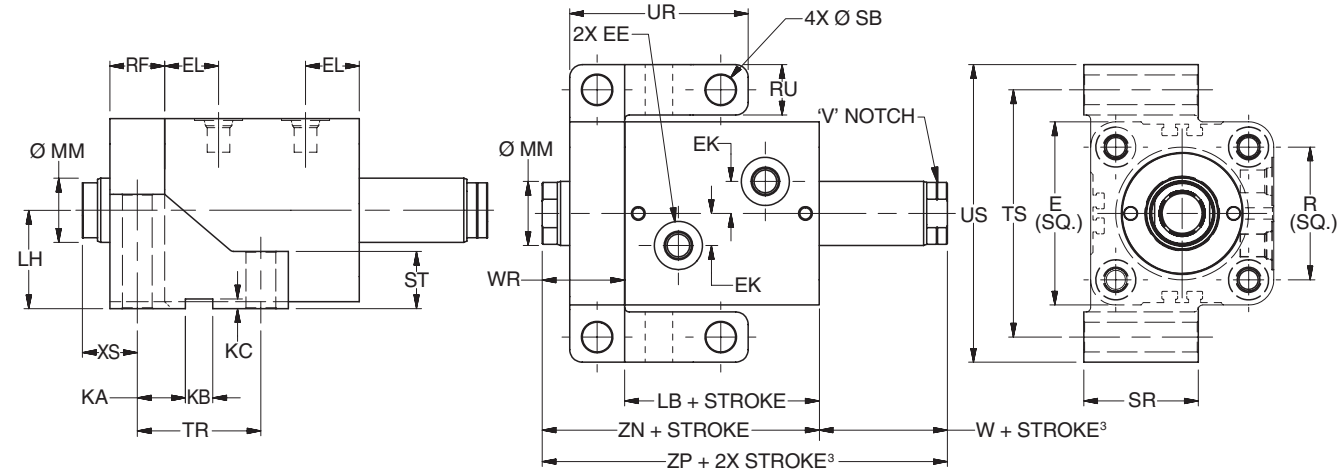

CA Mount Double Rod End – Envelope and Mounting Dimensions

Bore Ø	E	EE			EK	EL	KA	KB	KC	LH	R	RF	RU	SB Ø	SR	ST	TR	TS	UR	US	W³	WR	XS	Add Stroke		Add 2X Stroke
		SAE	NPTF	BSP																				LB	ZN	ZP³
20	43¹	#2²	1/8	G-1/8	6	16.5	12	5	2.75	24	30	10	10	5.5	25	10	29	58	39	68	8	18	13	43	61	69
25	49	#2²	1/8	G-1/8	8	17.5	13.5	6	3.25	27	36	12	12	6.8	30	12	33	66	45	78	8	20	14	45	65	73
32	62	#4	1/4	G-1/4	11	20.5	16.5	8	3.75	34	47	16	15	9	35	15	41	82	57	97	10	26	18	51	77	87
40	70	#4	1/4	G-1/4	12	21	18.5	10	4.25	38	52	20	18	11	40	20	47	94	67	112	10	30	20	55	85	95
50	80	#4	1/4	G-1/4	14	22.5	21	12	4.25	43	58	24	22	13.5	50	25	54	108	78	130	11	35	23	60	95	106
63	94	#4	1/4	G-1/4	17	26	25	14	4.75	51	69	28	26	16	60	30	64	128	92	154	13	41	27	67	108	121
80	114	#6	3/8	G-3/8	20	29.5	30	16	5.25	61	86	32	30	18	70	35	76	152	108	182	17	49	33	78	127	144
100	138	#6	3/8	G-3/8	25	35	36.5	20	6.25	75	106	38	36	22	80	40	93	186	131	222	26	64	45	96	160	186

[1] Port face on 20mm bore is extended 2mm. See port face extension drawing on T Mount page.

[2] Parker Triple-Lok™ Straight Thread Connector SAE #2 to ¼" 37° flare can be used when this port thread is required. Contact your local Parker Tube Fitting distributor and specify part number 4-2 F5OX.

[3] Minimum 'W + Stroke' on V notch rod side may apply. See minimum rod extension page for details.

CA Mount Double Rod End – Rod Dimensions

Bore Ø	MM Rod Ø	Rod End														Rod Extension Dimensions		
		Style 9M³		Style 4M		Style 9A³		Style 4A		Style 8A		Style 55M						
		KK	A	KK	A	KK	A	KK	A	CC	A	AD	AE	AF	AM	C	D	NA
20	12	M8x1.25	10	M8x1	14	5/16-24	10	5/16-24	14	3/8-24	16	8	3	6	11	6	10	11
25	14	M10x1.5	12	M10x1.25	16	3/8-24	12	3/8-24	16	1/2-20	18	12	4	8	13	6	12	13
32	18	M12x1.75	15	M12x1.25	18	7/16-20	15	7/16-20	18	9/16-18	25	16	6	10	16	8	15	17
40	22	M16x2	20	M16x1.5	22	5/8-18	20	5/8-18	22	3/4-16	30	20	8	12	20	8	19	21
50	28	M20x2.5	24	M20x1.5	28	3/4-16	24	3/4-16	28	7/8-14	35	24	10	16	25	9	24	27
63	36	M27x3	30	M27x2	36	1-14	30	1-14	36	1 1/4-12	45	28	12	22	33	11	32	35
80	45	M33x3.5	35	M33x2	45	1 1/4-12	35	1 1/4-12	45	1 1/2-12	56	34	14	28	41	13	39	43
100	56	M42x4.5	45	M42x2	56	1 1/2-12	45	1 1/2-12	56	1 3/4-12	70	42	16	35	52	22	48	54

Rod End Dimensions

Thread Style 4

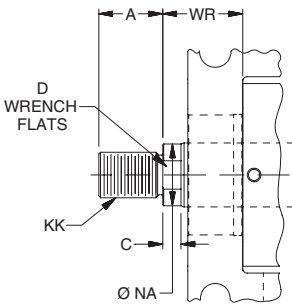

Thread Style 8

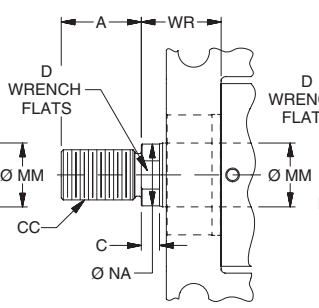

Thread Style 9

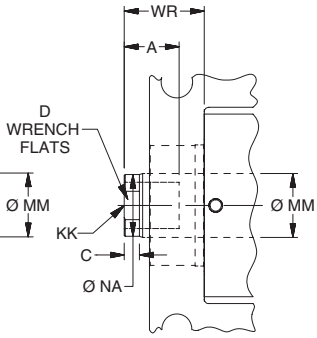

Style 55

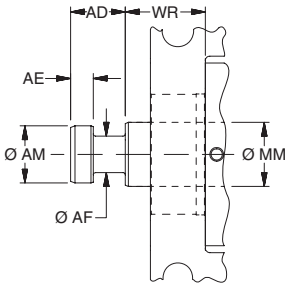

"Special" Thread Style 3

Special thread, extension, rod eye, blank, etc. are also available.

To order, specify "Style 3" and give desired dimensions for KK, A, & WR. If otherwise special furnish dimensional sketch.

www.comoso.com

Parker Hannifin Corporation
Industrial Cylinder Division
Des Plaines, Illinois USA

CHE

Global Position Sensing Switches

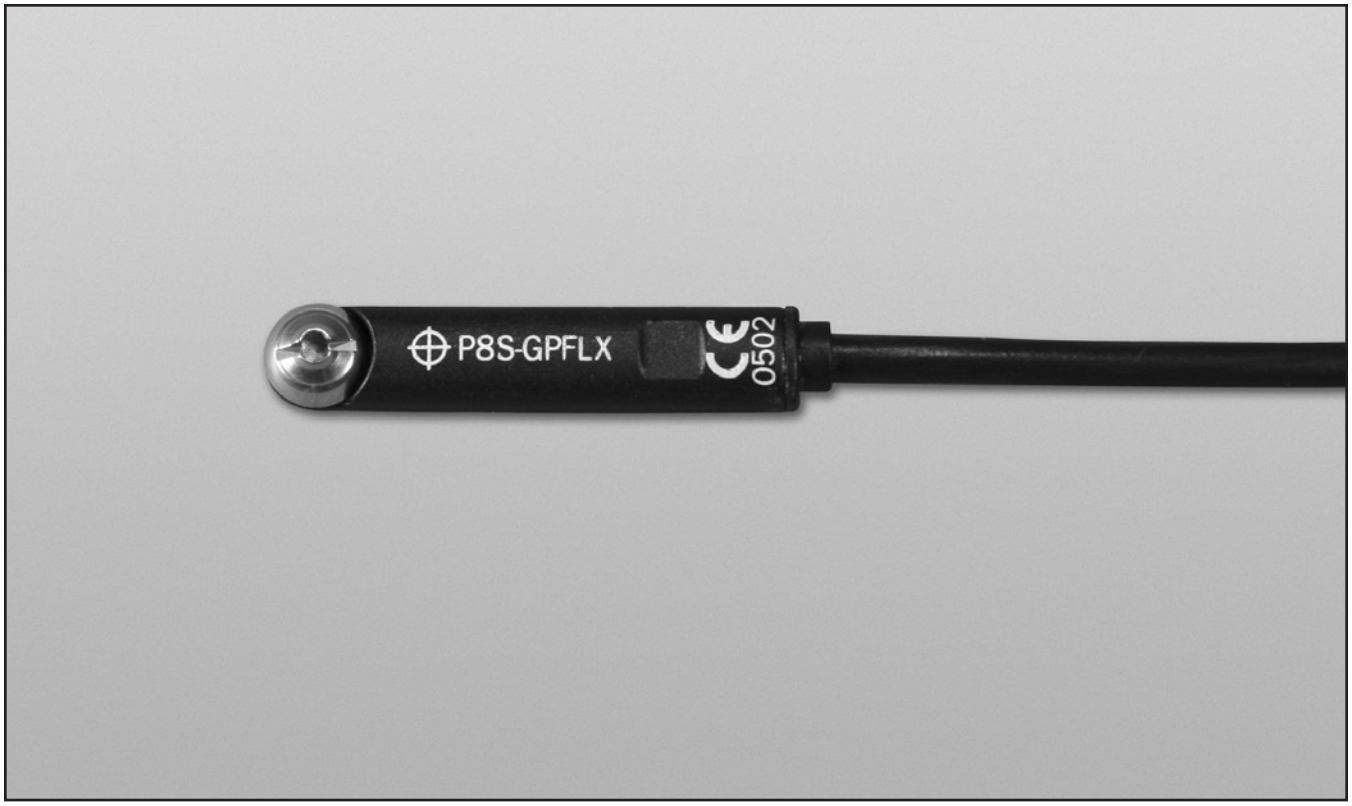

- Low Profile Keeps Switch Within Cylinder Envelope
- Both Reed and Solid State Switch Versions
- Switches Available World-Wide
- Solid State Switches use GMR Technology
- 5 Different Connection Styles
- Allow Position Sensing Anywhere Along Cylinder Stroke
- CE Approved

www.comoso.com

Global Drop-In Solid State Switches

Wiring	PNP Switch	NPN Switch	PNP Switch ATEX Certified	PNP Switch High Temperature
3m Flying Leads	P8S-GPFLX	P8S-GNFLX	P8S-GPFLX/EX[1]	P8S-GPFLH[2]
10m Flying Leads	P8S-GPFTX	P8S-GNFTX	N/A	N/A
0.3m Lead with 8mm Connector	P8S-GPSHX	P8S-GNSHX		
0.3m Lead with 12mm Connector	P8S-GPMHX	P8S-GNMHX		
1m Lead with 8mm Connector	P8S-GPSCX	P8S-GNSCX		

[1] ATEX switch is supplied with 2m Flying Leads. [2] High Temperature switch is not UL Listed.

Specifications

Switch Classification	Standard PNP or NPN	ATEX Certified PNP	High Temperature PNP
Type	Electronic	Electronic	Electronic
Output Function	Normally Open	Normally Open	Normally Open
Switch Output	PNP/NPN	PNP	PNP
Operating Voltage	10 - 30VDC	18 - 30VDC	10 - 30VDC
Continuous Current	100 mA max.	70 mA max.	200 mA max.
Response Sensitivity	28 Gauss min.	28 Gauss min.	25 Gauss
Switching Frequency	5 KHz	1 KHz	10 KHz
Power Consumption	10 mA max.	10 mA max.	15 mA max.
Voltage Drop	2.5 VDC max.	2.5 VDC max.	3.1 VDC max.
Ripple	10% of Operating Voltage	10% of Operating Voltage	15% of Operating Voltage
Hysteresis	1.5 mm max.	1.5 mm max.	1.5 mm max.
Repeatability	0.1 mm max.	0.1 mm max.	0.1 mm max.
EMC	EN 60 947-5-2	EN 60 947-5-2	EN 60 947-5-2
Short-circuit Protection	Yes	Yes	Yes
Power-up Pulse Suppression	Yes	Yes	Yes
Reverse Polarity Protection	Yes	Yes	Yes
Enclosure Rating	IP68	IP68	IP67
Shock and Vibration Stress	30g, 11 ms, 10 to 55Hz, 1 mm	30g, 11 ms, 10 to 55Hz, 1 mm	30g, 11 ms, 10 to 55Hz, 1 mm
Operating Temperature Range	-25°C to +75°C (-13°F to +167°F)	-20°C to +45°C (-4°F to +113°F)	-25°C to +105°C (-13°F to +221°F)
Housing Material	PA 12 Black	PA 12 Black	Aluminum
Connector Cable	PVC	PVC	PUR
Connector	PUR	–	–
Approval for ATEX	–	3D/3G	–

Global solid state switch outputs may be influenced by an external magnetic field. Care must be taken to avoid external magnetic field exposure.

Solid State Switch – Wiring Connection

Flying Lead or 8 mm Connector (shown)

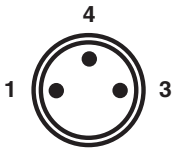

Pin	Wire	Function
1	Brown	Operating Voltage (+VDC)
4	Black	Output signal (N.O.)
3	Blue	-VDC

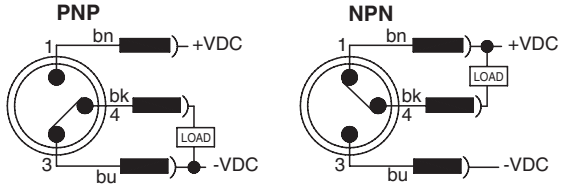

12 mm Connector

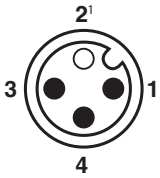

[1]Pin 2 not present.

Pin	Wire	Function
1	Brown	Operating Voltage (+VDC)
4	Black	Output Signal (N.O.)
2[1]	White	Not Used
3	Blue	-VDC

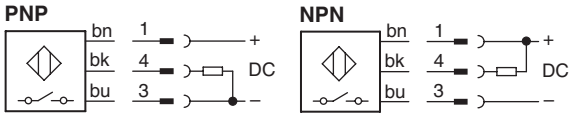

www.parker.com/cylinder
www.comoso.com

Parker Hannifin Corporation
Industrial Cylinder Division
Des Plaines, Illinois USA

CHE

Global Drop-In Reed Switches

Wiring	Reed Switch
3m Flying Leads	P8S-GRFLX
10m Flying Leads	P8S-GRFTX
0.3m Lead with 8mm Connector	P8S-GRSHX
0.3m Lead with 12mm Connector	P8S-GRMHX
1m Lead with 8mm Connector	P8S-GRSCX

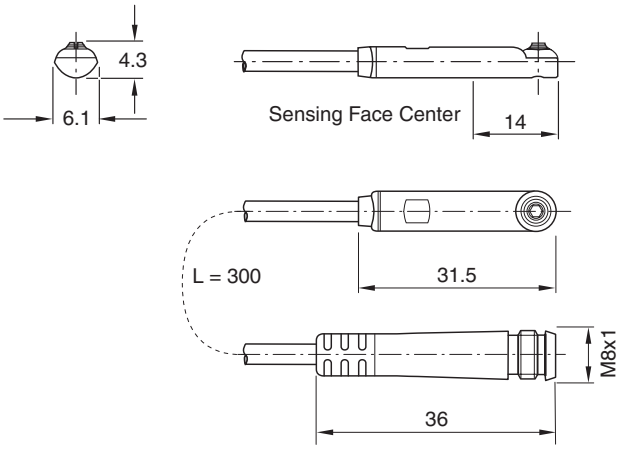

Specifications

Type.....2-Wire Reed
Output Function.....Normally Open
Operating Voltage.....10 - 120 VAC[1]
10 - 30 VDC
Switching Power.....6 W/VA
Continuous Current .....100 mA max.
Response Sensitivity .....30 Gauss min.
Switching Frequency .....400 Hz
Voltage Drop.....2.5 V max.
Ripple .....10% of Operating Voltage
Hysteresis.....1.5 mm max.
Repeatability.....0.2 mm max.
EMC.....EN 60 947-5-2
Reverse Polarity Protection.....Yes
Enclosure Rating .....IP 68
Shock and Vibration Stress .....30g, 11 ms, 10 to 55 Hz, 1 mm
Operating Temperature Range.....-25°C to +75°C (-13°F to 167°F)
Housing Material.....PA 12, Black
Connector Cable.....PVC
Connector.....PUR cable with 8 or
12 mm connector

Global Reed Switch output may be influenced by external magnetic fields. Care must be taken to avoid external magnetic field exposure.

Reed Switch – Wiring Connection

Flying Lead or 8 mm Connector[1]

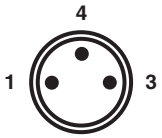

Pin	Wire	Function
1	Brown	Operating Voltage (+V)
4	Black	Not Used
3	Blue	Output Signal (-V or Ground)

[1]8mm connector rated for 50 VAC max.

12 mm Connector

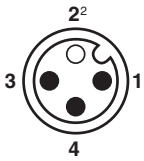

[2]Pin 2 not present.

Pin	Wire	Function
1	Brown	Operating Voltage (+V)
2[2]	White	Not Used
3	Blue	Output Signal (-V or Ground)
4	Black	Not Used

Circuit for Switching Contact Protection (Inductive Loads)

(Required for proper operation 24V DC)

Put Diode parallel to loads following polarity as shown below.

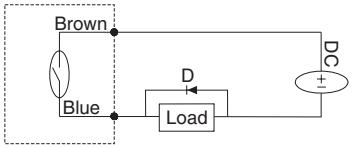

D: Diode: select a Diode with the breakdown voltage and current rating according to the load.

Typical Example—100 Volt, 1 Amp Diode
CR: Relay coil (under 0.5W coil rating)

(Recommended for longer life 120 VAC)

Put a resistor and capacitor in parallel with the load. Select the resistor and capacitor according to the load.

Typical Example:
CR: Relay coil (under 2W coil rating)
R: Resistor 1 KΩ - 5 KΩ, 1/4 W
C: Capacitor 0.1 ΩF, 600 V

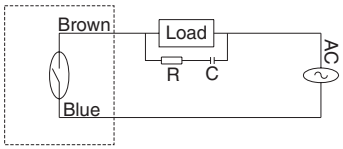

⚠ Caution

– Use an ampmeter to test reed switch current. Testing devices such as incandescent light bulbs may subject the reed sensor to high in-rush loads.
– **NOTE:** When checking an unpowered reed switch for continuity with a digital ohmmeter the resistance reading will change from infinity to a very large resistance (2 M ohm) when the sensor is activated. This is due to the presence of a diode in the reed switch.
– Anti-magnetic shielding is recommended for reed switches exposed to high external RF or magnetic fields.
– The magnetic field strength of the piston magnet is designed to operate with our switches. Other manufacturers' switches may not operate correctly in conjunction with these magnets.
– Use relay coils for reed switch contact protection.
– The operation of some 120 VAC PLC's (especially some older Allen-Bradley PLC's) can overload the reed switch. The switch may fail to release after the piston magnet has passed. This problem may be corrected by the placement of a 700 to 1K OHM resistor between the switch and the PLC input terminal. Consult the manufacturer of the PLC for appropriate circuit.
– Switches with long wire leads (greater than 15 feet) can cause capacitance build-up and sticking will result. Attach a resistor in series with the reed switches (the resistor should be installed as close as possible to the switches). The resistor should be selected such that R (ohms) >E/0.3.
– Global reed switch outputs may be influenced by an external magnetic field. Care must be taken to avoid external magnetic field exposure.

www.comoso.com

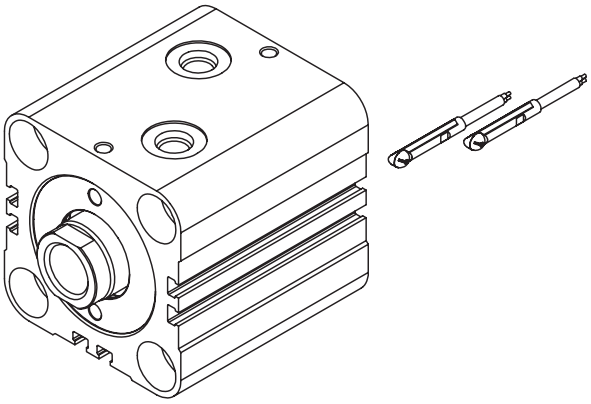

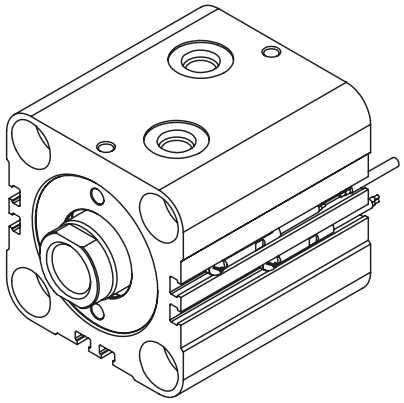

1. Slide the switch into any of the six mounting grooves provided.
2. For end of stroke sensing, position cross hairs of target symbol ⊕ on the switch at the specified distance from the cylinder body end as listed in the table below.
3. Locate the switch as required for intermediate stroke position sensing.
4. Turn the locking screw clockwise to secure the switch in place.

Minimum Stroke for Cylinders with Switches

All Bores	One Switch	Two Switches
	5mm	10mm

Switch Location for End-of-Stroke Sensing

Bore	A	B
20	24	18.5
25	25	19.5
32	28	22.5
40	31	23.5
50	33.5	26
63	37	29.5
80	42.5	35
100	53	42.5

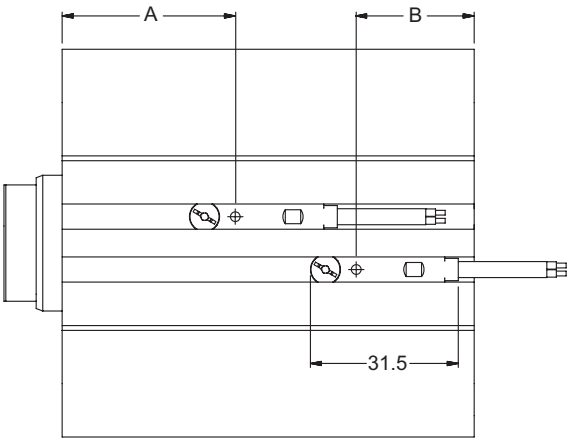

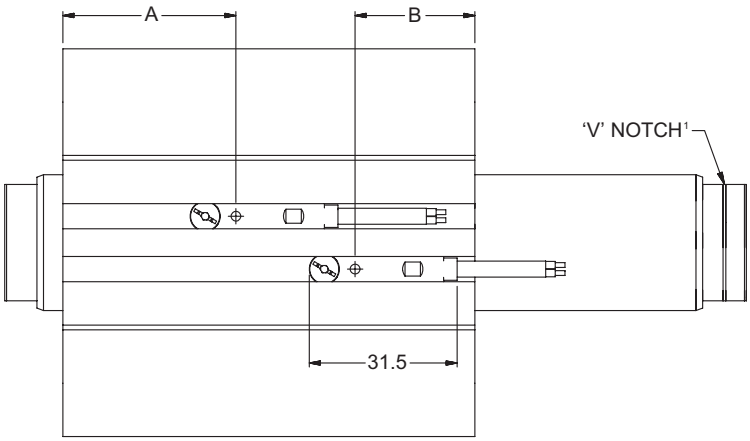

[1] The rod side for switch location 'B', on double rod end cylinders, is identified by a 'V' notch in the 'NA' diameter of rod end styles #4, #8, and #9. The 'V' notch will be in the 'AM' diameter of rod end style #55.

www.comoso.com

CPS Cylinder Position Sensor – with analog output

The CPS is a linear position sensor that can be used to measure the distance of Series CHE cylinder magnetic piston movement. Bronze cap and gland material (as specified with piston code 5 in the model number) are also required for proper functioning of the CPS. The Cylinder Position Sensor is available in four maximum measuring ranges – 32 mm, 64 mm, 96 mm, 128 mm and 160 mm. The electrical zero and end points within each range are adjustable using the Teach-In button. Current (4 to 20 mA) and voltage (0 – 10 VDC) analog outputs are selectable through wiring connection and reverse acting of each output is achieved by reversing the zero and end points.

Maximum Sensing Range	Part Number	Wiring
32 mm	CPS-32	0.3m cable with 4-pin 8 mm connector
64 mm	CPS-64	
96 mm	CPS-96	
128 mm	CPS-128	
160 mm	CPS-160	

Specifications

Type ..... Electronic
Supply Voltage ..... 15 – 30 VDC
Analog Output - Current ..... 4 – 20 mA
Analog Output - Voltage ..... 0 – 10 VDC
Max. Load Resistance – Current Output ..... 500 Ohm
Max. Load Resistance – Voltage Output ..... 2 kOhm
Idle Current typ. ..... 25 mA
Measuring Range Tolerance ..... ± 1 mm
Electrical Configuration ..... DC 4-Wire
Sample Time ..... 1 ms
Resolution typ. ..... 0.05 mm
Linearity typ. ..... 0.3 mm
Repeat accuracy typ. ..... 0.1 mm
Piston Speed ..... 3m/s Maximum
Ripple ..... 10% of Operating Voltage
EMC ..... EN 60 947-5-7
Short Circuit Protection ..... Yes
Overload Protection ..... Yes
Reverse Polarity Protection ..... Yes
Enclosure Rating ..... IP 67
Shock and Vibration Stress ..... 30g, 11 ms, 10 to 55 Hz, 1 mm
Operating Temperature Range .. -25°C to +70°C (-4°F to +158°F)
Housing Material ..... PA Strengthened
Connector Cable ..... PUR
Connector ..... PUR Cable w/8 mm connector

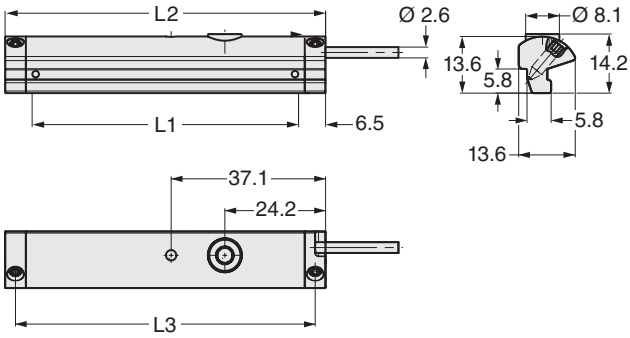

Dimensions

L1 Sensing Range	L2	L3
32	45	40
64	77	72
96	109	104
128	141	136
160	173	168

CPS Wiring Connection

8 mm
4-Pin Connector

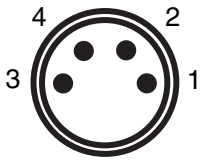

Pin	Wire	Function
1	Brown	Operating Voltage (+VDC)
3	Blue	-VDC
4	Black	0 -10 VDC Output
2	White	4 – 20 mA Output

www.comoso.com
Parker Hannifin Corporation
Industrial Cylinder Division
Des Plaines, Illinois USA

Operating Instructions

- Read the operating instructions before starting operation.
- Connection, assembly, and settings should be accomplished only by competent technicians.
- This sensor does not qualify as a safety component in accordance with EU machine guidelines.
- Use power source according to IEC/DIN EN 60204-1.
- Do not use ferrite components in the direct environment of the CPS.

Proper Use

The measurement signal is output via analog voltage or current. The yellow LED lights when the piston is within the measurement range (signal strength indicator). The desired Zero Point and End Point of the measurement range can be set precisely via the Teach-In button.

Starting Operation

1. Positioning and securing the sensor:
Connect the sensor to operating voltage (see Specifications and Wiring Connection diagram). Insert the sensor into the cylinder mounting slot from above. Move the piston into the desired Zero Point position. The yellow LED lights when the piston is in the measurement range. Move the sensor along the slot until the LED switches off. Move the sensor back again until the LED lights. Secure the sensor appropriately. The measurement range does not need to be set. If the user does not Teach-In the measurement range, the maximum possible range is used as a default.

2. Teach-In of measurement range (option):
Move the piston into the desired Zero Point position. Press the teach button for 2 seconds; LED blinks (3x/second). Release the Teach-In button; the Zero Point is stored. Set the piston position for the “End Point” of the measurement range. Press the Teach-In button; the “End Point” of the measurement range is stored.

Note: If the Zero Point is external to the measurement range, the Teach-In procedure is aborted and the LED blinks quickly as a result (6x/s). If the Teach-In procedure is not concluded, there is a timeout after 90 seconds; the last taught-in measurement range is active.

3. Check of the taught-in measurement range:
Move the piston and check the set measurement range using the LED. If necessary, correct the desired measurement range via a renewed Teach-In procedure.

4. Reset the measurement range to the default setting:
Press and hold the Teach-In button for at least 5 seconds. The sensor is reset to the default setting (max. measurement range).

Maintenance

Parker CPS magnetic cylinder sensors do not require any maintenance. It is recommend that the screw connections and plug-in connections be checked at regular intervals.

Minimum Stroke

To ensure that both CPS mounting screws engage in the cylinder body, the minimum stroke for each bore and sensor combination must be observed.

Bore Ø	Minimum Stroke				
	CPS-32	CPS-64	CPS-96	CPS-128	CPS-160
20	2	34	N/A	N/A	N/A
25	–	32	64	96	N/A
32	–	26	58	90	122
40	–	22	54	86	118
50	–	17	49	81	113
63	–	10	42	74	106
80	–	–	31	63	95
100	–	–	13	45	77

Cordset for CPS Sensors

The 4-pin, 8 mm threaded connector on this cordset can be used only with CPS Sensors.

Cordset Specifications

Connector ..... Oil resistant polyurethane body material, PA 6 (Nylon) contact carrier, spacings to VDE 0110 Group C

Contacts..... Gold plated brass

Cord Construction..... Oil resistant black PUR jacket, non-wicking, non-hygroscopic, 300V. Cable end is stripped and tinned.

Conductors..... Extra high flex stranding, PVC insulation.

Temperature..... -40°C to +90°C (-40°F to +176°F)

Protection..... NEMA 6 / IP67

Cable Length..... 2m (6.56 ft) or 5m (16.40 ft)

8 mm 4-Pin Connector

Cable Length	Part Number
5 meters	096043T005
2 meters	096043T002

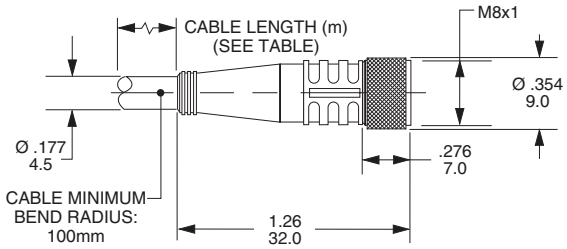

CHE

8mm and 12mm Cordset for Global Switches

A female connector is available for all switches with the male 8mm and 12mm quick connect option. The cordsets are available with a right angle or straight connector. Cordset part numbers are listed below.

8mm Cordset

Cable Length	Threaded Connector	Snap On Connector
5 meters	086620T005	086620S005
2 meters	086620T002	086620S002

12mm Cordset

Cable Length	Threaded Connector	Right Angle Connector
5 meters	9126487205	9126487305
2 meters	9126487202	9126487302

Cordset Specifications

Connector.....Oil resistant polyurethane body material, PA 6 (Nylon) contact carrier, spacings to VDE 0110 Group C, (150 AC/DC)

Contacts.....Gold plated beryllium copper, machined from solid stock

Coupling Method.....Snap-Lock or chrome plated brass nut

Cord Construction .....Oil resistant black PUR jacket, non-wicking, non-hygroscopic, 300V. Cable end is stripped and tinned.

Conductors.....Extra high flex stranding, PVC insulation

Temperature.....-40 to 194°F (-40 to 90°C)

Protection.....NEMA 1, 3, 4, 6P and IEC 1P67

Cable Length.....6.56 ft (2m) or 16.4 ft (5m)

8mm Snap-On Straight Connector

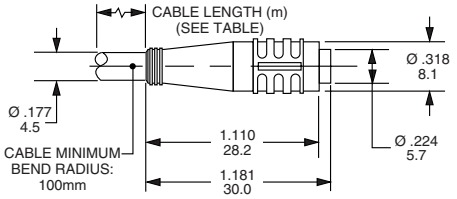

8mm Threaded Straight Connector

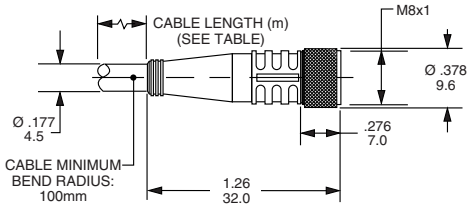

12mm Right Angle Connector

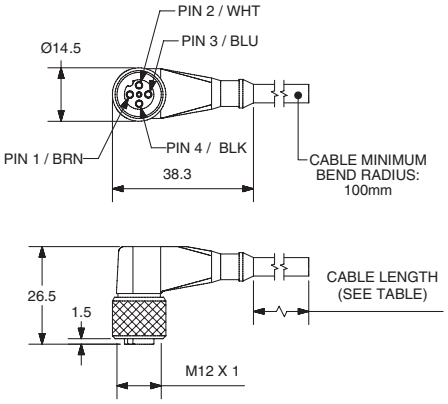

12mm Straight Connector

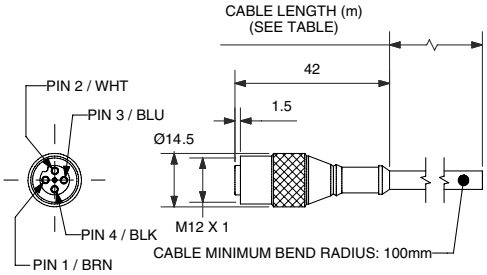

www.comoso.com

Series CHD Cylinder Features

Primary Seal – polyurethane rod seal with multiple sealing edges is self-compensating and self relieving to withstand pressure variations and conform to mechanical deflection that may occur.

Piston Rod – Medium carbon steel, hard chrome plated and polished.

Ports – SAE O-ring ports are standard.

OPTIONAL PORTS
NPTF and BSPP ports are also available. Manifold ports are available on mounting styles C & CN.

Bi-directional Piston Seal – Polyurethane seal ring with energizer provides leak-free performance.

Secondary Seal – Rod Wiper – wipes clean any oil film adhering to the rod on the extend stroke and cleans the rod on the return stroke.

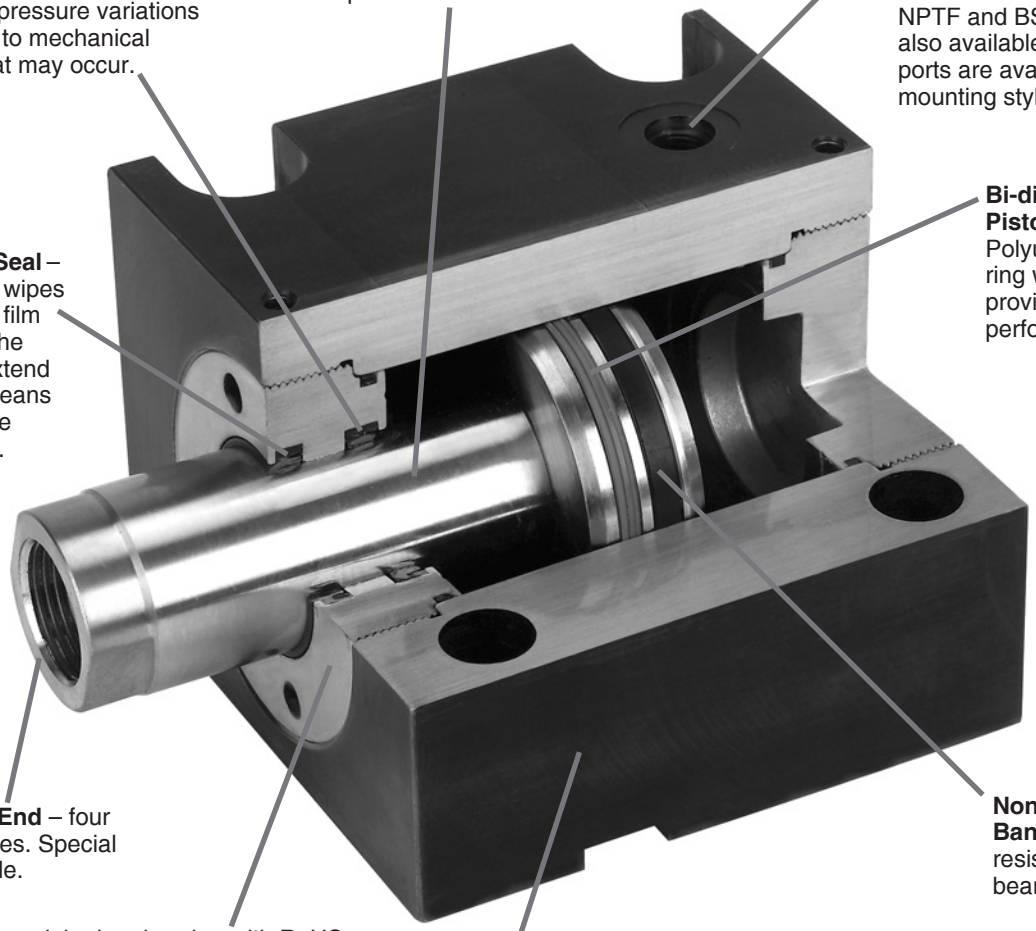

Piston Rod End – four standard styles. Special ends available.

Non-Metallic Wear Band – improves resistance to bearing loads.

Rod Gland – nodular iron bearing with RoHS compliant zinc plating for corrosion resistance. Optional pilot gland available at no additional cost.

Cylinder Body – steel with black paint exterior surface treatment.

CHD

CHD Compact Hydraulic Cylinders...
require less mounting space than conventional tie rod cylinders.

Shorter overall length for the same bore and stroke

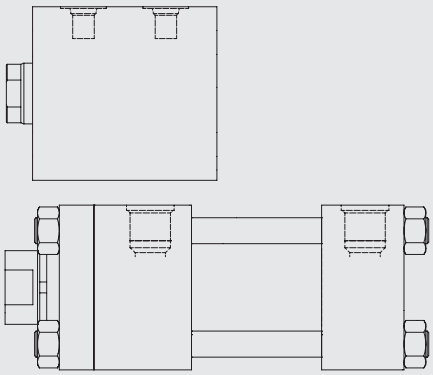

50mm bore by 25mm stroke shown

Optional Pilot Gland...
offers added bearing area to increase service life and also improves alignment of cylinder and load.

Standard Gland | **Pilot Gland**

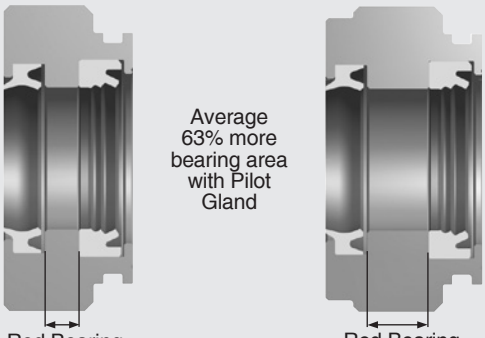

(18mm rod glands depicted)
Use pilot cap to improve alignment for rear mount applications

www.comoso.com

Theoretical Push and Pull Forces

The cylinder output forces are derived from the formula:

$$F = \frac{P \times A}{10000}$$

Where F = Force in kN.
P = Pressure at the cylinder in bar.
A = Effective area of cylinder piston in square mm.

To determine the bore size for the application take the following steps.

1. Select the Operating Pressure column closest to that desired.
2. In the same column, identify the force required to move the load (always rounding up). If the piston rod is in compression use the 'Push' row and if the piston rod is in tension use the 'Pull' row.
3. In the row to the left is the bore required.

If the cylinder envelope dimensions are too large for the application, increase the operating pressure to the maximum pressure in the table below, if possible, and repeat steps 1 - 3.

Push and Pull Force in kN

Bore Ø	Rod Ø	Operating Direction	Piston Area (mm²)	Operating Pressure (Bar)						
				50	75	100	125	150	175	207
20	12	Push	314	1.57	2.36	3.14	3.93	4.71	5.50	6.50
		Pull	201	1.01	1.51	2.01	2.51	3.02	3.52	4.16
25	14	Push	491	2.45	3.68	4.91	6.14	7.36	8.59	10.2
		Pull	337	1.68	2.53	3.37	4.21	5.05	5.90	6.97
32	18	Push	804	4.02	6.03	8.04	10.1	12.1	14.1	16.6
		Pull	550	2.75	4.12	5.50	6.87	8.25	9.62	11.4
40	22	Push	1,257	6.28	9.42	12.6	15.7	18.8	22.0	26.0
		Pull	877	4.38	6.57	8.8	11.0	13.1	15.3	18.1
50	28	Push	1,963	9.82	14.7	19.6	24.5	29.5	34.4	40.6
		Pull	1,348	6.74	10.1	13.5	16.8	20.2	23.6	27.9
63	36	Push	3,117	15.6	23.4	31.2	39.0	46.8	54.6	64.5
		Pull	2,099	10.5	15.7	21.0	26.2	31.5	36.7	43.5
80	45	Push	5,027	25.1	37.7	50.3	62.8	75.4	88.0	104
		Pull	3,436	17.2	25.8	34.4	43.0	51.5	60.1	71.1

Series CHD Pressure Rating

Bore Ø	Maximum Working Pressure in bar
20	207
25	207
32	207
40	207
50	207
63	207
80	207

Equivalents

1 kN = 224.81 pounds force
1 bar = 14.50 psi
1 mm = .03937 inch
1 mm² = .00155 inch²

Cylinder Weights

To determine the weight of a Series CHD cylinder, first select the proper basic zero stroke weight for the mounting required, and then calculate the weight of the cylinder stroke and add the result to the basic weight. For extra rod extension, use piston rod weights per mm in Table C.

Table A Single Rod End CHD Cylinder Weights in kg.

Bore Ø	Rod Ø	Single Rod Cylinders									
		Basic Weight at Zero Stroke				Per mm Stroke	Basic Weight at Zero Stroke	Per mm Stroke	Basic Weight at Zero Stroke		Per mm Stroke
		T	TN, TR	A, M	AN, AR, MN, MR		J, H		C	CN	
20	12	0.57	0.58	0.61	0.62	0.013	0.84	0.013	-	-	-
25	14	0.80	0.81	0.84	0.85	0.016	1.17	0.017	0.71	0.73	0.015
32	18	1.39	1.42	1.45	1.48	0.024	1.92	0.025	1.41	1.43	0.026
40	22	1.87	1.90	1.97	2.01	0.029	2.81	0.031	1.93	1.96	0.033
50	28	2.61	2.67	2.79	2.85	0.036	4.20	0.038	2.82	2.88	0.044
63	36	4.11	4.20	4.34	4.42	0.047	6.11	0.051	4.69	4.78	0.063
80	45	7.19	7.33	7.49	7.62	0.067	10.7	0.072	-	-	-

Table C Piston rod weights in kg.

Rod Ø	Piston Rod Weight per mm
12	0.001
14	0.001
18	0.002
22	0.003
28	0.005
36	0.008
45	0.012

Table B Double Rod End CHD Cylinder Weights in kg.

Bore Ø	Rod Ø	Double Rod Cylinders									
		Basic Weight at Zero Stroke				Per mm Stroke	Basic Weight at Zero Stroke	Per mm Stroke	Basic Weight at Zero Stroke		Per mm Stroke
		T	TN	A, M	AN, MN		J		C	CN	
20	12	0.60	0.61	0.64	0.65	0.013	0.87	0.014	-	-	-
25	14	0.83	0.85	0.87	0.89	0.017	1.21	0.018	0.75	0.77	0.016
32	18	1.46	1.48	1.52	1.54	0.026	1.98	0.027	1.47	1.50	0.028
40	22	1.97	2.01	2.08	2.11	0.032	2.92	0.034	2.03	2.07	0.036
50	28	2.81	2.87	2.99	3.05	0.041	4.40	0.043	3.02	3.08	0.049
63	36	4.52	4.61	4.75	4.83	0.055	6.53	0.059	5.10	5.19	0.071
80	45	7.99	8.12	8.28	8.42	0.080	11.5	0.085	-	-	-

Equivalent

1 kg = 2.2046 pounds

www.comoso.com
Parker Hannifin Corporation
Industrial Cylinder Division
Des Plaines, Illinois USA

Model Ordering Code for CHD

32		T	CHD	B	T			9		A	25
Bore Dia.	**Double Rod Cylinder**	**Mounting Style**	**Series**	**Piston**	**Ports**	**Seals**	**Special Modification**	**Piston Rod Thread Style**	**Piston Rod Thread Style** (For Dbl. Rod)	**Piston Rod Thread Type**	**Stroke**
Specify: (Bore dia. in mm) 20 25 32 40 50 63 80	Use "K" only if double rod cylinder is required.	Specify: T = Std. Mount TN = Std. Mount with pilot gland TR = Std. Mount with cap pilot A = Imperial thread tapped both ends AN = Imperial tapped with pilot gland AR = Imperial tapped with cap pilot M = Metric thread tapped both ends MN = Metric tapped with pilot gland MR = Metric tapped with cap pilot C = Foot Mount CN = Foot Mount with pilot gland J = Head Rectangular Flange H = Cap Rectangular Flange	CHD	Specify: B = Non-magnetic piston Add option: 9 = Non-magnetic piston with bronze cap & gland.	Specify: T = SAE Ports U = NPTF Ports R = BSPP Ports M = Manifold Ports[1]	Leave blank for std. Nitrile Seals V = Fluoro-carbon	Use "S" for Special Modifi-cation other than rod end, and specify modifi-cation.	Specify: 4 = Small Male 8 = Inter-mediate Male 9 = Female 55 = Flange Coupler 3 = Special[2]	Specify: 4 = Small Male 8 = Inter-mediate Male 9 = Female 55 = Flange Coupler 3 = Special[2]	Specify: A = Imperial (UNF or UNC) M = Metric[3]	Specify Stroke Length Required in mm[4].

Shaded boxes identify required model number fields.

[1] Manifold ports are only available on Foot Mounting Styles C & CN. See Mounting Styles C & CN Dimension Pages for minimum stroke with Manifold Ports.

[2] To order thread style 3, specify "3" and give the desired dimensions for KK, A, and W (or WP depending on mounting) or furnish a dimensioned sketch.

[3] Always use M for rod style 55.

[4] See Maximum Stroke Chart at right.

Maximum Stroke

Bore Ø	Stroke[5] in mm		
	Mounting Styles T, TN, TR, A, AN, AR M, MN, MR	Mounting Styles C & CN	Bolt-on Mounting Styles[6] J & H
20	50	N/A	50
25	60	50	60
32	115	100	100
40	115	100	100
50	125	100	100
63	115	100	100
80	115	N/A	100

[5] Intermediate strokes in 1mm increments are available.

[6] Longer strokes (up to maximum lengths for Mounting Styles T, TN, TR, A, AN, AR, M, MN & MR) are available at increased manufacturing lead times. Contact the factory.

Standard Specifications

- 13 Standard mounting styles
- Bore sizes – 20mm to 80mm
- Piston Rod Diameter – 12mm to 45mm
- Single and double rod construction available
- Strokes up to 100mm depending on bore size (see table above)
- Working pressure up to 207 bar
- Temperature range – -23°C to +121°C (depending on seal class)
- Reference ISO 16656: 2004

Seal Classes	Typical Fluids	Temperature Range
1 – Standard Nitrile & Polyurethane	Hydraulic Oil, MIL-H-5606 Oil	-23°C (-10°F) to +100°C (+212°F)
5 – Optional (At extra cost) Fluorocarbon Seals	High Temperature	-23°C (-10°F) to +121°C (+250°F) Class 5 seals may be operated up to +204°C (+400°F) with reduced service life
Note: Class 5 seals are not suitable for use with Skydrol fluid, but can be used with hydraulic oil if desired.		

www.comoso.com

Parker Hannifin Corporation
Industrial Cylinder Division
Des Plaines, Illinois USA

Style T Through Bolt Mount – Single Rod End – 20mm to 80mm Bore Size

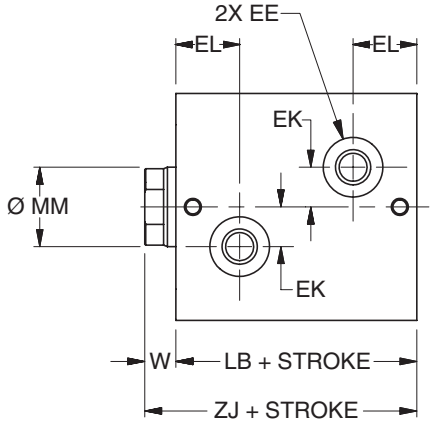

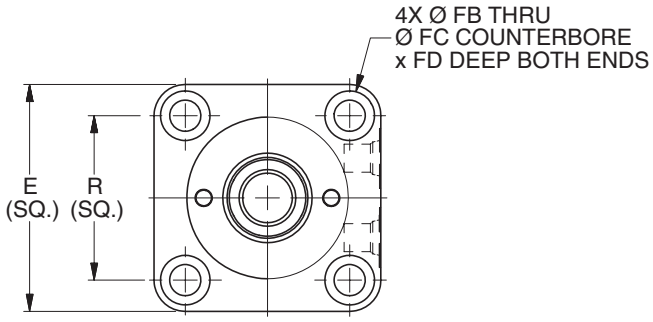

T Mount Single Rod End – Envelope and Mounting Dimensions

Bore Ø	E	EE			EK	EL	FB Ø	FC Ø	FD	R	W	Add Stroke	
		SAE	NPTF	BSP								LB	ZJ
20	44	#2[1]	1/8	G-1/8	6	16.5	5.5	9.5	5.4	30	8	43	51
25	50	#2[1]	1/8	G-1/8	8	17.5	5.5	9.5	5.4	36	8	45	53
32	62	#4	1/4	G-1/4	11	20.5	7	11	6.5	47	10	51	61
40	70	#4	1/4	G-1/4	12	21	9	14	8.6	52	10	55	65
50	80	#4	1/4	G-1/4	14	22.5	11	17.5	10.8	58	11	60	71
63	94	#4	1/4	G-1/4	17	26	13.5	20	13	69	13	67	80
80	114	#6	3/8	G-3/8	20	29.5	16	23	15.2	86	17	78	95

[1] Parker Triple-Lok™ Straight Thread Connector SAE #2 to ¼" 37° flare can be used when this port thread is required. Contact your local Parker Tube Fitting distributor and specify part number 4-2 F5OX.

T Mount Single Rod End – Rod Dimensions

Bore Ø	MM Rod Ø	Rod Thread														Rod Extension Dimensions		
		Style 9M		Style 4M		Style 9A		Style 4A		Style 8A		Style 55M						
		KK	A	KK	A	KK	A	KK	A	CC	A	AD	AE	AF	AM	C	D	NA
20	12	M8x1.25	10	M8x1	14	5/16-24	10	5/16-24	14	3/8-24	16	8	3	6	11	6	10	11
25	14	M10x1.5	12	M10x1.25	16	3/8-24	12	3/8-24	16	1/2-20	18	12	4	8	13	6	12	13
32	18	M12x1.75	15	M12x1.25	18	7/16-20	15	7/16-20	18	9/16-18	25	16	6	10	16	8	15	17
40	22	M16x2	20	M16x1.5	22	5/8-18	20	5/8-18	22	3/4-16	30	20	8	12	20	8	19	21
50	28	M20x2.5	24	M20x1.5	28	3/4-16	24	3/4-16	28	7/8-14	35	24	10	16	25	9	24	27
63	36	M27x3	30	M27x2	36	1-14	30	1-14	36	1 1/4-12	45	28	12	22	33	11	32	35
80	45	M33x3.5	35	M33x2	45	1 1/4-12	35	1 1/4-12	45	1 1/2-12	56	34	14	28	41	13	39	43

Rod End Dimensions

Thread Style 4

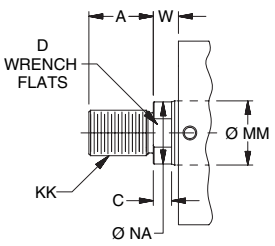

Thread Style 8

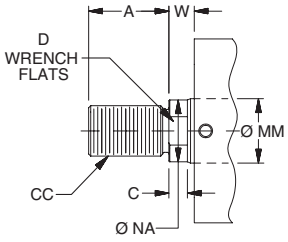

Thread Style 9

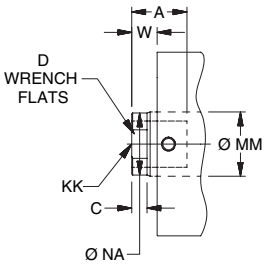

Style 55

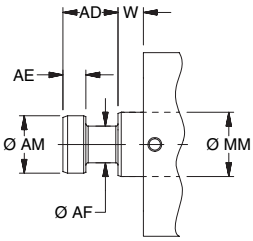

"Special" Thread Style 3

Special thread, extension, rod eye, blank, etc. are also available.

To order, specify "Style 3" and give desired dimensions for KK, A, & W. If otherwise special furnish dimensional sketch.

www.comoso.com

Parker Hannifin Corporation
Industrial Cylinder Division
Des Plaines, Illinois USA

Style T Through Bolt Mount – Double Rod End – 20mm to 80mm Bore Size

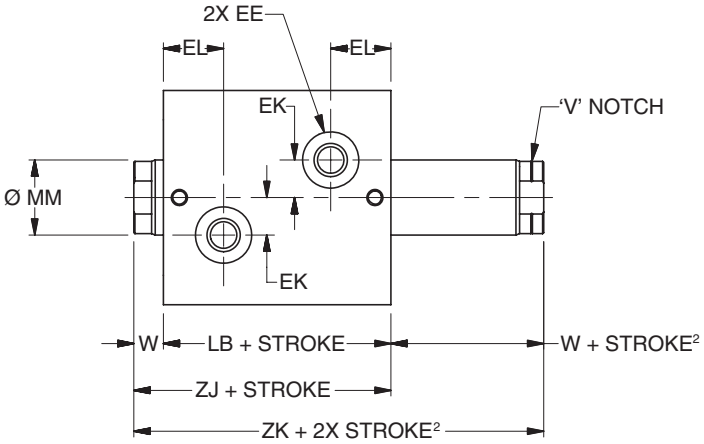

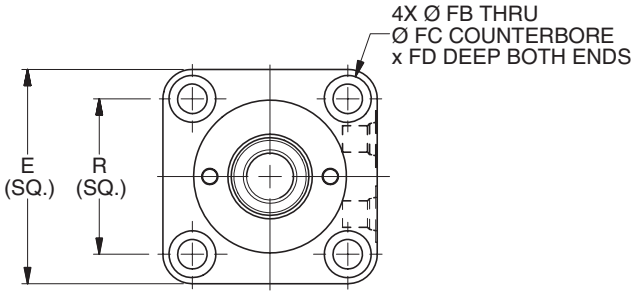

T Mount Double Rod End – Envelope and Mounting Dimensions

Bore Ø	E	EE			EK	EL	FB Ø	FC Ø	FD	R	W²	Add Stroke		Add 2X Stroke
		SAE	NPTF	BSP								LB	ZJ	ZK²
20	44	#2¹	1/8	G-1/8	6	16.5	5.5	9.5	5.4	30	8	43	51	59
25	50	#2¹	1/8	G-1/8	8	17.5	5.5	9.5	5.4	36	8	45	53	61
32	62	#4	1/4	G-1/4	11	20.5	7	11	6.5	47	10	51	61	71
40	70	#4	1/4	G-1/4	12	21	9	14	8.6	52	10	55	65	75
50	80	#4	1/4	G-1/4	14	22.5	11	17.5	10.8	58	11	60	71	82
63	94	#4	1/4	G-1/4	17	26	13.5	20	13	69	13	67	80	93
80	114	#6	3/8	G-3/8	20	29.5	16	23	15.2	86	17	78	95	112

[1] Parker Triple-Lok™ Straight Thread Connector SAE #2 to ¼" 37° flare can be used when this port thread is required. Contact your local Parker Tube Fitting distributor and specify part number 4-2 F5OX.

[2] Minimum 'W + Stroke' on V notch rod side may apply. See minimum rod extension page for details.

T Mount Double Rod End – Rod Dimensions

Bore Ø	MM Rod Ø	Rod End														Rod Extension Dimensions		
		Style 9M²		Style 4M		Style 9A²		Style 4A		Style 8A		Style 55M						
		KK	A	KK	A	KK	A	KK	A	CC	A	AD	AE	AF	AM	C	D	NA
20	12	M8x1.25	10	M8x1	14	5/16-24	10	5/16-24	14	3/8-24	16	8	3	6	11	6	10	11
25	14	M10x1.5	12	M10x1.25	16	3/8-24	12	3/8-24	16	1/2-20	18	12	4	8	13	6	12	13
32	18	M12x1.75	15	M12x1.25	18	7/16-20	15	7/16-20	18	9/16-18	25	16	6	10	16	8	15	17
40	22	M16x2	20	M16x1.5	22	5/8-18	20	5/8-18	22	3/4-16	30	20	8	12	20	8	19	21
50	28	M20x2.5	24	M20x1.5	28	3/4-16	24	3/4-16	28	7/8-14	35	24	10	16	25	9	24	27
63	36	M27x3	30	M27x2	36	1-14	30	1-14	36	1 1/4-12	45	28	12	22	33	11	32	35
80	45	M33x3.5	35	M33x2	45	1 1/4-12	35	1 1/4-12	45	1 1/2-12	56	34	14	28	41	13	39	43

Rod End Dimensions

Thread Style 4

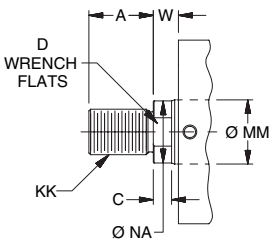

Thread Style 8

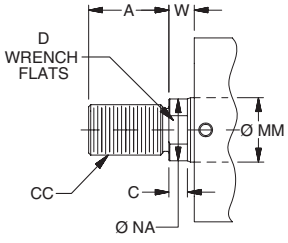

Thread Style 9

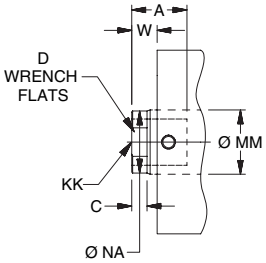

Style 55

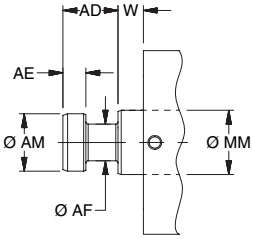

"Special" Thread Style 3

Special thread, extension, rod eye, blank, etc. are also available.

To order, specify "Style 3" and give desired dimensions for KK, A, & W. If otherwise special furnish dimensional sketch.

CHD

www.comoso.com

Parker Hannifin Corporation
Industrial Cylinder Division
Des Plaines, Illinois USA

Styles TN and TR Through Bolt Mount with Pilot Gland or Pilot Cap – Single Rod End – 20mm to 80mm Bore Size

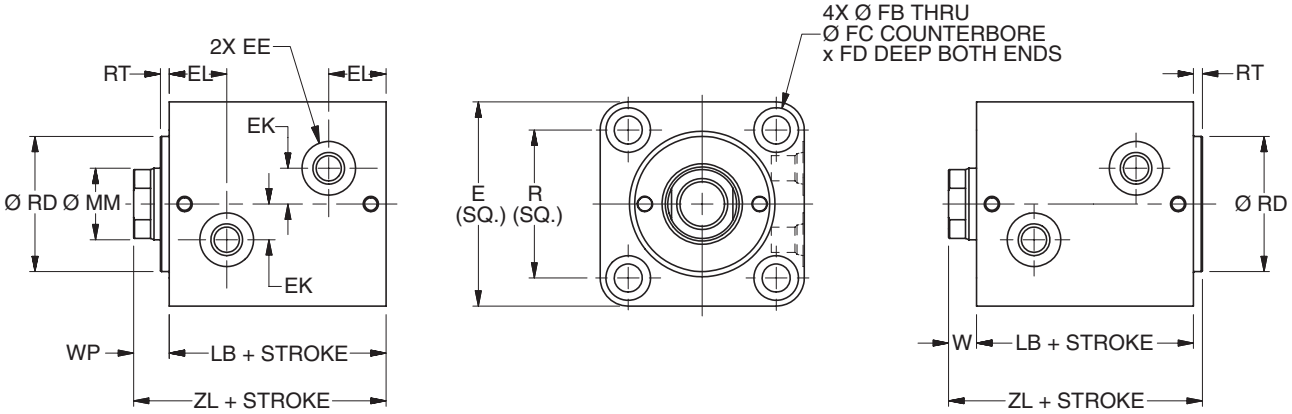

Style TN Pilot Gland Mount **Style TR Pilot Cap Mount**

TN and TR Mount Single Rod End – Envelope and Mounting Dimensions

Bore Ø	E	EE			EK	EL	FB Ø	FC Ø	FD	R	RD Ø f9	RT	W	WP	Add Stroke	
		SAE	NPTF	BSP											LB	ZL
20	44	#2[1]	1/8	G-1/8	6	16.5	5.5	9.5	5.4	30	24	3	8	11	43	54
25	50	#2[1]	1/8	G-1/8	8	17.5	5.5	9.5	5.4	36	27	3	8	11	45	56
32	62	#4	1/4	G-1/4	11	20.5	7	11	6.5	47	36	3	10	13	51	64
40	70	#4	1/4	G-1/4	12	21	9	14	8.6	52	43	3	10	13	55	68
50	80	#4	1/4	G-1/4	14	22.5	11	17.5	10.8	58	53	3	11	14	60	74
63	94	#4	1/4	G-1/4	17	26	13.5	20	13	69	66	3	13	16	67	83
80	114	#6	3/8	G-3/8	20	29.5	16	23	15.2	86	83	3	17	20	78	98

[1] Parker Triple-Lok™ Straight Thread Connector SAE #2 to ¼" 37° flare can be used when this port thread is required. Contact your local Parker Tube Fitting distributor and specify part number 4-2 F5OX.

TN and TR Mount Single Rod End – Rod Dimensions

Bore Ø	MM Rod Ø	Rod End														Rod Extension Dimensions		
		Style 9M		Style 4M		Style 9A		Style 4A		Style 8A		Style 55M						
		KK	A	KK	A	KK	A	KK	A	CC	A	AD	AE	AF	AM	C	D	NA
20	12	M8x1.25	10	M8x1	14	5/16-24	10	5/16-24	14	3/8-24	16	8	3	6	11	6	10	11
25	14	M10x1.5	12	M10x1.25	16	3/8-24	12	3/8-24	16	1/2-20	18	12	4	8	13	6	12	13
32	18	M12x1.75	15	M12x1.25	18	7/16-20	15	7/16-20	18	9/16-18	25	16	6	10	16	8	15	17
40	22	M16x2	20	M16x1.5	22	5/8-18	20	5/8-18	22	3/4-16	30	20	8	12	20	8	19	21
50	28	M20x2.5	24	M20x1.5	28	3/4-16	24	3/4-16	28	7/8-14	35	24	10	16	25	9	24	27
63	36	M27x3	30	M27x2	36	1-14	30	1-14	36	1 1/4-12	45	28	12	22	33	11	32	35
80	45	M33x3.5	35	M33x2	45	1 1/4-12	35	1 1/4-12	45	1 1/2-12	56	34	14	28	41	13	39	43

Rod End Dimensions

Thread Style 4 **Thread Style 8** **Thread Style 9** **Style 55**

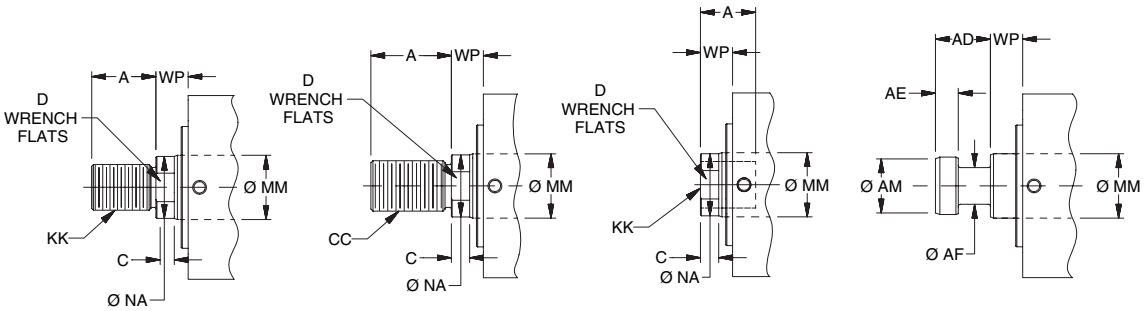

"Special" Thread Style 3

Special thread, extension, rod eye, blank, etc. are also available.

To order, specify "Style 3" and give desired dimensions for KK, A, & W (TR Mount) or WP (TN Mount) If otherwise special furnish dimensional sketch.

www.comoso.com

Parker Hannifin Corporation
Industrial Cylinder Division
Des Plaines, Illinois USA

Style TN Through Bolt Mount with Pilot Gland – Double Rod End – 20mm to 80mm Bore Size

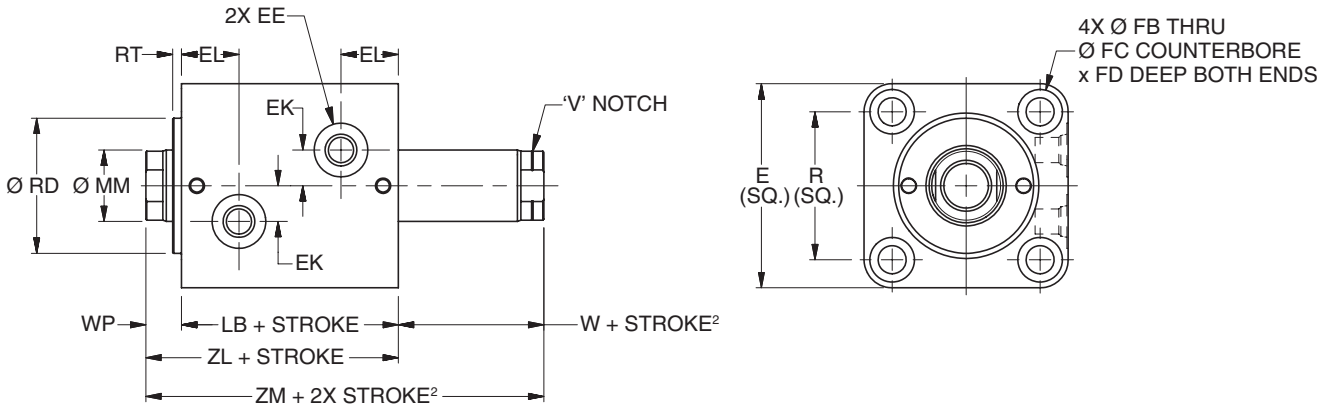

TN Mount Double Rod End – Envelope and Mounting Dimensions

Bore Ø	E	EE			EK	EL	FB Ø	FC Ø	FD	R	RD Ø f9	RT	W²	WP	Add Stroke		Add 2X Stroke
		SAE	NPTF	BSP											LB	ZL	ZM²
20	44	#2[1]	1/8	G-1/8	6	16.5	5.5	9.5	5.4	30	24	3	8	11	43	54	62
25	50	#2[1]	1/8	G-1/8	8	17.5	5.5	9.5	5.4	36	27	3	8	11	45	56	64
32	62	#4	1/4	G-1/4	11	20.5	7	11	6.5	47	36	3	10	13	51	64	74
40	70	#4	1/4	G-1/4	12	21	9	14	8.6	52	43	3	10	13	55	68	78
50	80	#4	1/4	G-1/4	14	22.5	11	17.5	10.8	58	53	3	11	14	60	74	85
63	94	#4	1/4	G-1/4	17	26	13.5	20	13	69	66	3	13	16	67	83	96
80	114	#6	3/8	G-3/8	20	29.5	16	23	15.2	86	83	3	17	20	78	98	115

[1] Parker Triple-Lok™ Straight Thread Connector SAE #2 to ¼" 37° flare can be used when this port thread is required. Contact your local Parker Tube Fitting distributor and specify part number 4-2 F5OX.

[2] Minimum 'W + Stroke' on V notch rod side may apply. See minimum rod extension page for details.

TN Mount Double Rod End – Rod Dimensions

Bore Ø	MM Rod Ø	Rod End														Rod Extension Dimensions		
		Style 9M²		Style 4M		Style 9A²		Style 4A		Style 8A		Style 55M						
		KK	A	KK	A	KK	A	KK	A	CC	A	AD	AE	AF	AM	C	D	NA
20	12	M8x1.25	10	M8x1	14	5/16-24	10	5/16-24	14	3/8-24	16	8	3	6	11	6	10	11
25	14	M10x1.5	12	M10x1.25	16	3/8-24	12	3/8-24	16	1/2-20	18	12	4	8	13	6	12	13
32	18	M12x1.75	15	M12x1.25	18	7/16-20	15	7/16-20	18	9/16-18	25	16	6	10	16	8	15	17
40	22	M16x2	20	M16x1.5	22	5/8-18	20	5/8-18	22	3/4-16	30	20	8	12	20	8	19	21
50	28	M20x2.5	24	M20x1.5	28	3/4-16	24	3/4-16	28	7/8-14	35	24	10	16	25	9	24	27
63	36	M27x3	30	M27x2	36	1-14	30	1-14	36	1 1/4-12	45	28	12	22	33	11	32	35
80	45	M33x3.5	35	M33x2	45	1 1/4-12	35	1 1/4-12	45	1 1/2-12	56	34	14	28	41	13	39	43

Rod End Dimensions

Thread Style 4

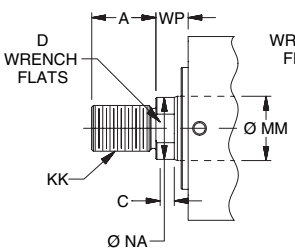

Thread Style 8

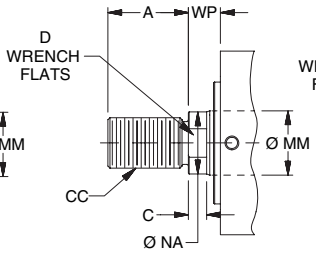

Thread Style 9

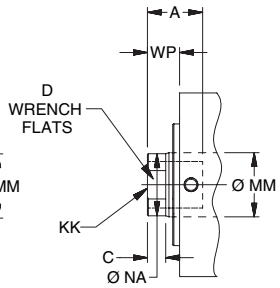

Style 55

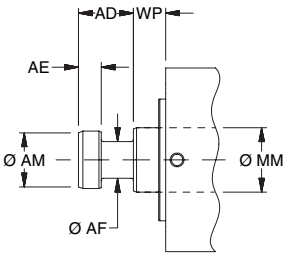

"Special" Thread Style 3

Special thread, extension, rod eye, blank, etc. are also available.

To order, specify "Style 3" and give desired dimensions for KK, A, & WP. If otherwise special furnish dimensional sketch.

CHD

www.comoso.com

Parker Hannifin Corporation
Industrial Cylinder Division
Des Plaines, Illinois USA

Style A Imperial Tapped Both Ends Mount – Single Rod End – 20mm to 80mm Bore Size

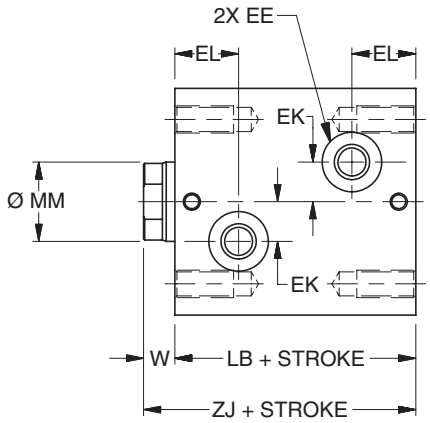

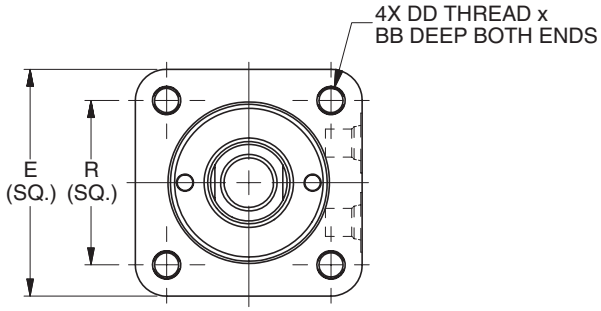

A Mount Single Rod End – Envelope and Mounting Dimensions

Bore Ø	BB	DD	E	EE			EK	EL	R	W	Add Stroke	
				SAE	NPT	BSP					LB	ZJ
20	10.1	10-32 UNF - 2B	44	# 2[1]	1/8	G-1/8	6	16.5	30	8	43	51
25	10.5	10-32 UNF - 2B	50	# 2[1]	1/8	G-1/8	8	17.5	36	8	45	53
32	12.5	1/4-28 UNF - 2B	62	# 4	1/4	G-1/4	11	20.5	47	10	51	61
40	16.6	5/16-24 UNF - 2B	70	# 4	1/4	G-1/4	12	21	52	10	55	65
50	20.8	3/8-24 UNF - 2B	80	# 4	1/4	G-1/4	14	22.5	58	11	60	71
63	24.3	1/2-20 UNF - 2B	94	# 4	1/4	G-1/4	17	26	69	13	67	80
80	28.8	5/8-18 UNF - 2B	114	# 6	3/8	G-3/8	20	29.5	86	17	78	95

[1] Parker Triple-Lok™ Straight Thread Connector SAE #2 to ¼" 37° flare can be used when this port thread is required. Contact your local Parker Tube Fitting distributor and specify part number 4-2 F5OX.

A Mount Single Rod End – Rod Dimensions

Bore Ø	MM Rod Ø	Rod End														Rod Extension Dimensions		
		Style 9M		Style 4M		Style 9A		Style 4A		Style 8A		Style 55M						
		KK	A	KK	A	KK	A	KK	A	CC	A	AD	AE	AF	AM	C	D	NA
20	12	M8x1.25	10	M8x1	14	5/16-24	10	5/16-24	14	3/8-24	16	8	3	6	11	6	10	11
25	14	M10x1.5	12	M10x1.25	16	3/8-24	12	3/8-24	16	1/2-20	18	12	4	8	13	6	12	13
32	18	M12x1.75	15	M12x1.25	18	7/16-20	15	7/16-20	18	9/16-18	25	16	6	10	16	8	15	17
40	22	M16x2	20	M16x1.5	22	5/8-18	20	5/8-18	22	3/4-16	30	20	8	12	20	8	19	21
50	28	M20x2.5	24	M20x1.5	28	3/4-16	24	3/4-16	28	7/8-14	35	24	10	16	25	9	24	27
63	36	M27x3	30	M27x2	36	1-14	30	1-14	36	1 1/4-12	45	28	12	22	33	11	32	35
80	45	M33x3.5	35	M33x2	45	1 1/4-12	35	1 1/4-12	45	1 1/2-12	56	34	14	28	41	13	39	43

Rod End Dimensions

Thread Style 4

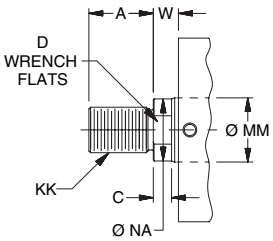

Thread Style 8

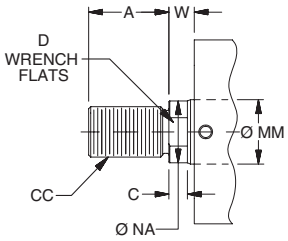

Thread Style 9

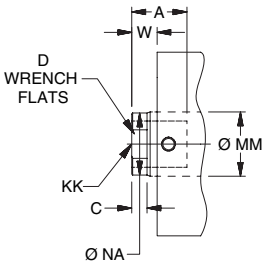

Style 55

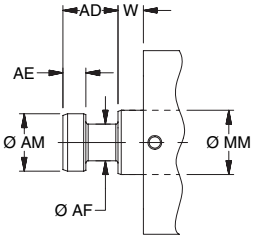

"Special" Thread Style 3

Special thread, extension, rod eye, blank, etc. are also available.

To order, specify "Style 3" and give desired dimensions for KK, A, & W. If otherwise special furnish dimensional sketch.

www.comoso.com

Parker Hannifin Corporation
Industrial Cylinder Division
Des Plaines, Illinois USA

Style A Imperial Tapped Both Ends Mount – Double Rod End – 20mm to 80mm Bore Size

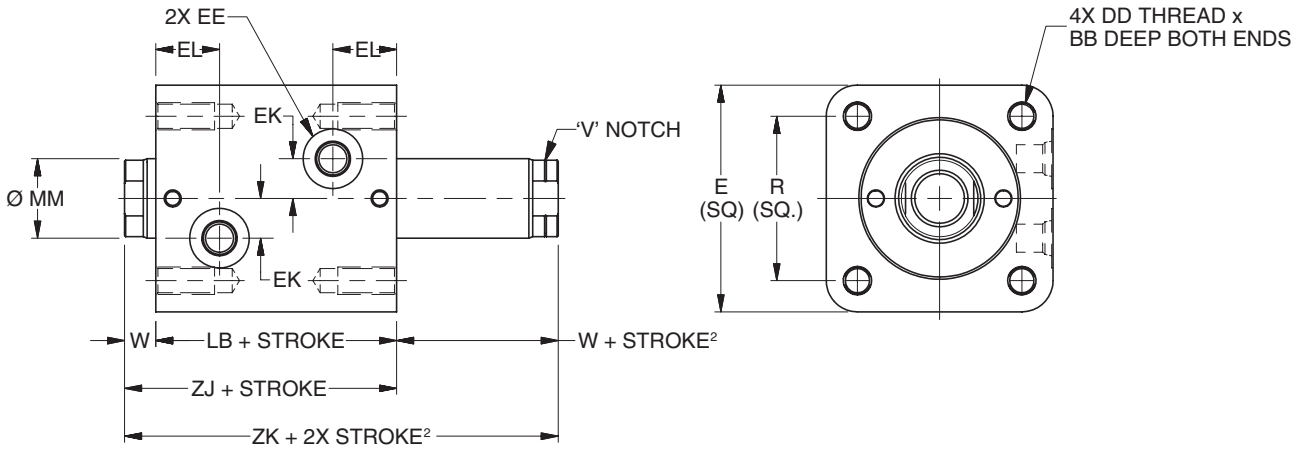

A Mount Double Rod End – Envelope and Mounting Dimensions

Bore Ø	BB	DD	E	EE			EK	EL	R	W²	Add Stroke		Add 2X Stroke
				SAE	NPT	BSP					LB	ZJ	ZK²
20	10.1	10-32 UNF - 2B	44	# 2[1]	1/8	G-1/8	6	16.5	30	8	43	51	59
25	10.5	10-32 UNF - 2B	50	# 2[1]	1/8	G-1/8	8	17.5	36	8	45	53	61
32	12.5	1/4-28 UNF - 2B	62	# 4	1/4	G-1/4	11	20.5	47	10	51	61	71
40	16.6	5/16-24 UNF - 2B	70	# 4	1/4	G-1/4	12	21	52	10	55	65	75
50	20.8	3/8-24 UNF - 2B	80	# 4	1/4	G-1/4	14	22.5	58	11	60	71	82
63	24.3	1/2-20 UNF - 2B	94	# 4	1/4	G-1/4	17	26	69	13	67	80	93
80	28.8	5/8-18 UNF - 2B	114	# 6	3/8	G-3/8	20	29.5	86	17	78	95	112

[1] Parker Triple-Lok™ Straight Thread Connector SAE #2 to ¼" 37° flare can be used when this port thread is required. Contact your local Parker Tube Fitting distributor and specify part number 4-2 F5OX.

[2] Minimum 'W + Stroke' on V notch rod side may apply. See minimum rod extension page for details.

A Mount Double Rod End – Rod Dimensions

Bore Ø	MM Rod Ø	Rod End														Rod Extension Dimensions		
		Style 9M²		Style 4M		Style 9A²		Style 4A		Style 8A		Style 55M						
		KK	A	KK	A	KK	A	KK	A	CC	A	AD	AE	AF	AM	C	D	NA
20	12	M8x1.25	10	M8x1	14	5/16-24	10	5/16-24	14	3/8-24	16	8	3	6	11	6	10	11
25	14	M10x1.5	12	M10x1.25	16	3/8-24	12	3/8-24	16	1/2-20	18	12	4	8	13	6	12	13
32	18	M12x1.75	15	M12x1.25	18	7/16-20	15	7/16-20	18	9/16-18	25	16	6	10	16	8	15	17
40	22	M16x2	20	M16x1.5	22	5/8-18	20	5/8-18	22	3/4-16	30	20	8	12	20	8	19	21
50	28	M20x2.5	24	M20x1.5	28	3/4-16	24	3/4-16	28	7/8-14	35	24	10	16	25	9	24	27
63	36	M27x3	30	M27x2	36	1-14	30	1-14	36	1 1/4-12	45	28	12	22	33	11	32	35
80	45	M33x3.5	35	M33x2	45	1 1/4-12	35	1 1/4-12	45	1 1/2-12	56	34	14	28	41	13	39	43

Rod End Dimensions

Thread Style 4

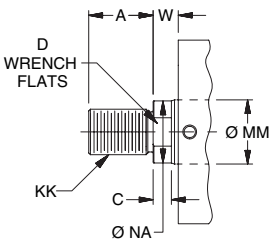

Thread Style 8

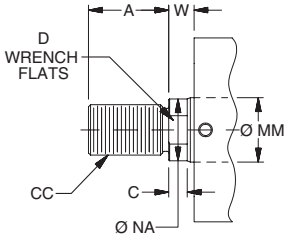

Thread Style 9

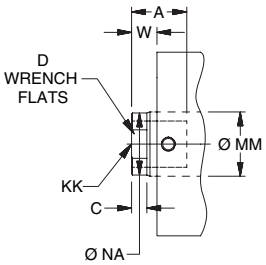

Style 55

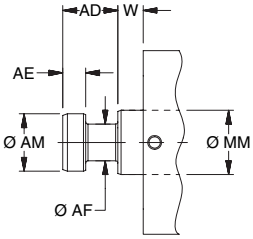

"Special" Thread Style 3

Special thread, extension, rod eye, blank, etc. are also available.

To order, specify "Style 3" and give desired dimensions for KK, A, & W. If otherwise special furnish dimensional sketch.

CHD

www.comoso.com

Parker Hannifin Corporation
Industrial Cylinder Division
Des Plaines, Illinois USA

Styles AN and AR Imperial Tapped Both Ends Mounts with Pilot Gland or Pilot Cap – Single Rod End – 20mm to 80mm Bore Size

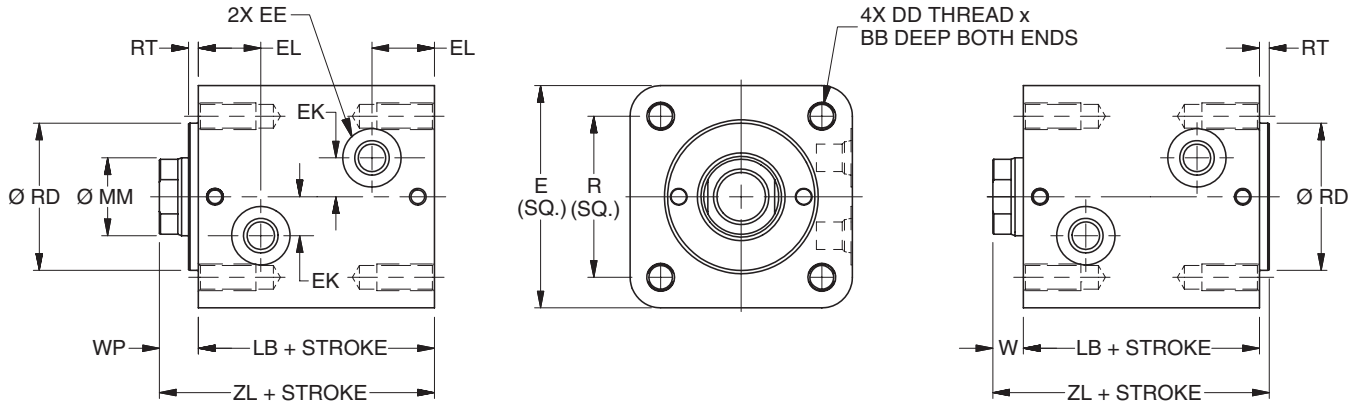

Style AN Imperial Tapped Both Ends Mount with Pilot Gland

Style AR Imperial Tapped Both Ends Mount with Pilot Cap

AN and AR Mount Single Rod End – Envelope and Mounting Dimensions

Bore Ø	BB	DD	E	EE			EK	EL	R	RD Ø f9	RT	W	WP	Add Stroke	
				SAE	NPT	BSP								LB	ZL
20	10.1	10-32 UNF - 2B	44	# 2[1]	1/8	G-1/8	6	16.5	30	24	3	8	11	43	54
25	10.5	10-32 UNF - 2B	50	# 2[1]	1/8	G-1/8	8	17.5	36	27	3	8	11	45	56
32	12.5	1/4-28 UNF - 2B	62	# 4	1/4	G-1/4	11	20.5	47	36	3	10	13	51	64
40	16.6	5/16-24 UNF - 2B	70	# 4	1/4	G-1/4	12	21	52	43	3	10	13	55	68
50	20.8	3/8-24 UNF - 2B	80	# 4	1/4	G-1/4	14	22.5	58	53	3	11	14	60	74
63	24.3	1/2-20 UNF - 2B	94	# 4	1/4	G-1/4	17	26	69	66	3	13	16	67	83
80	28.8	5/8-18 UNF - 2B	114	# 6	3/8	G-3/8	20	29.5	86	83	3	17	20	78	98

[1] Parker Triple-Lok™ Straight Thread Connector SAE #2 to ¼" 37° flare can be used when this port thread is required. Contact your local Parker Tube Fitting distributor and specify part number 4-2 F5OX.

AN and AR Mount Single Rod End – Rod Dimensions

Bore Ø	MM Rod Ø	Rod End														Rod Extension Dimensions		
		Style 9M		Style 4M		Style 9A		Style 4A		Style 8A		Style 55M						
		KK	A	KK	A	KK	A	KK	A	CC	A	AD	AE	AF	AM	C	D	NA
20	12	M8x1.25	10	M8x1	14	5/16-24	10	5/16-24	14	3/8-24	16	8	3	6	11	6	10	11
25	14	M10x1.5	12	M10x1.25	16	3/8-24	12	3/8-24	16	1/2-20	18	12	4	8	13	6	12	13
32	18	M12x1.75	15	M12x1.25	18	7/16-20	15	7/16-20	18	9/16-18	25	16	6	10	16	8	15	17
40	22	M16x2	20	M16x1.5	22	5/8-18	20	5/8-18	22	3/4-16	30	20	8	12	20	8	19	21
50	28	M20x2.5	24	M20x1.5	28	3/4-16	24	3/4-16	28	7/8-14	35	24	10	16	25	9	24	27
63	36	M27x3	30	M27x2	36	1-14	30	1-14	36	1 1/4-12	45	28	12	22	33	11	32	35
80	45	M33x3.5	35	M33x2	45	1 1/4-12	35	1 1/4-12	45	1 1/2-12	56	34	14	28	41	13	39	43

Rod End Dimensions

Thread Style 4

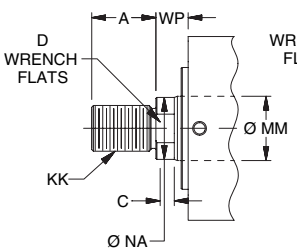

Thread Style 8

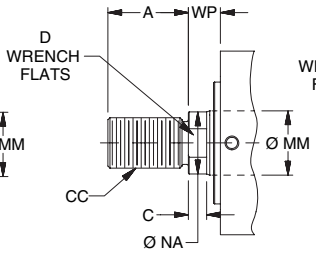

Thread Style 9

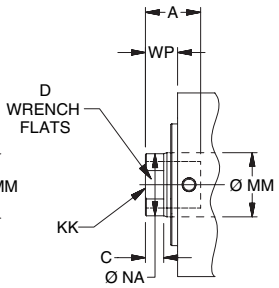

Style 55

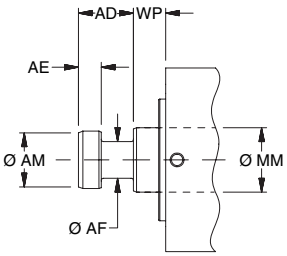

"Special" Thread Style 3

Special thread, extension, rod eye, blank, etc. are also available.

To order, specify "Style 3" and give desired dimensions for KK, A, & W (AR Mount) or WP (AN Mount) If otherwise special furnish dimensional sketch.

www.comoso.com

Parker Hannifin Corporation
Industrial Cylinder Division
Des Plaines, Illinois USA

Style AN Imperial Tapped Both Ends Mount with Pilot Gland – Double Rod End – 20mm to 80mm Bore Size

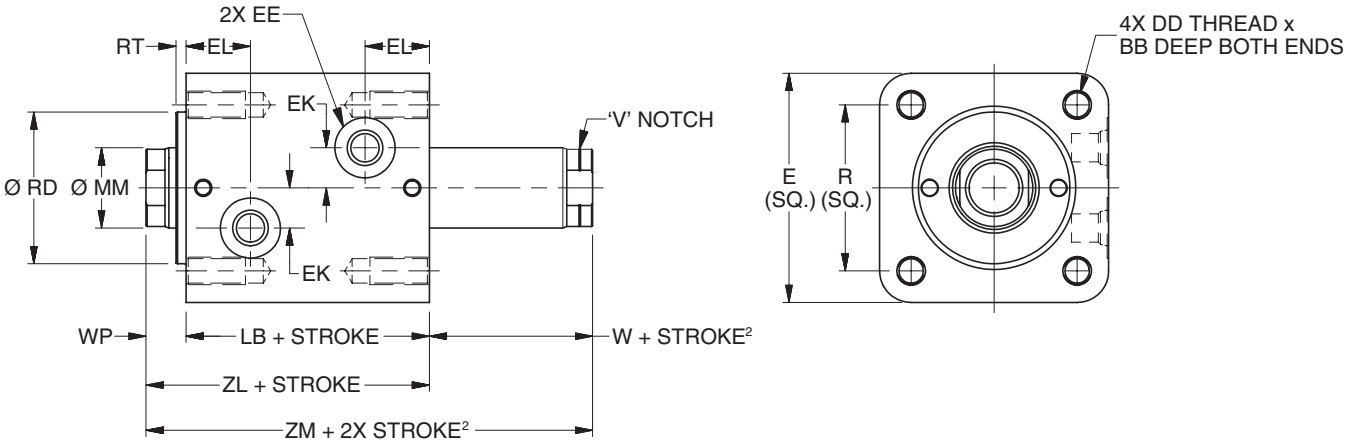

AN Mount Double Rod End – Envelope and Mounting Dimensions

Bore Ø	BB	DD	E	EE			EK	EL	R	RD Ø f9	RT	W²	WP	Add Stroke		Add 2X Stroke
				SAE	NPTF	BSP								LB	ZL	ZM²
20	10.1	10-32 UNF - 2B	44	# 2[1]	1/8	G-1/8	6	16.5	30	24	3	8	11	43	54	62
25	10.5	10-32 UNF - 2B	50	# 2[1]	1/8	G-1/8	8	17.5	36	27	3	8	11	45	56	64
32	12.5	1/4-28 UNF - 2B	62	# 4	1/4	G-1/4	11	20.5	47	36	3	10	13	51	64	74
40	16.6	5/16-24 UNF - 2B	70	# 4	1/4	G-1/4	12	21	52	43	3	10	13	55	68	78
50	20.8	3/8-24 UNF - 2B	80	# 4	1/4	G-1/4	14	22.5	58	53	3	11	14	60	74	85
63	24.3	1/2-20 UNF - 2B	94	# 4	1/4	G-1/4	17	26	69	66	3	13	16	67	83	96
80	28.8	5/8-18 UNF - 2B	114	# 6	3/8	G-3/8	20	29.5	86	83	3	17	20	78	98	115

[1] Parker Triple-Lok™ Straight Thread Connector SAE #2 to ¼" 37° flare can be used when this port thread is required. Contact your local Parker Tube Fitting distributor and specify part number 4-2 F5OX.

[2] Minimum 'W + Stroke' on V notch rod side may apply. See minimum rod extension page for details.

AN Mount Double Rod End – Rod Dimensions

Bore Ø	MM Rod Ø	Rod End														Rod Extension Dimensions		
		Style 9M²		Style 4M		Style 9A²		Style 4A		Style 8A		Style 55M						
		KK	A	KK	A	KK	A	KK	A	CC	A	AD	AE	AF	AM	C	D	NA
20	12	M8x1.25	10	M8x1	14	5/16-24	10	5/16-24	14	3/8-24	16	8	3	6	11	6	10	11
25	14	M10x1.5	12	M10x1.25	16	3/8-24	12	3/8-24	16	1/2-20	18	12	4	8	13	6	12	13
32	18	M12x1.75	15	M12x1.25	18	7/16-20	15	7/16-20	18	9/16-18	25	16	6	10	16	8	15	17
40	22	M16x2	20	M16x1.5	22	5/8-18	20	5/8-18	22	3/4-16	30	20	8	12	20	8	19	21
50	28	M20x2.5	24	M20x1.5	28	3/4-16	24	3/4-16	28	7/8-14	35	24	10	16	25	9	24	27
63	36	M27x3	30	M27x2	36	1-14	30	1-14	36	1 1/4-12	45	28	12	22	33	11	32	35
80	45	M33x3.5	35	M33x2	45	1 1/4-12	35	1 1/4-12	45	1 1/2-12	56	34	14	28	41	13	39	43

Rod End Dimensions

Thread Style 4

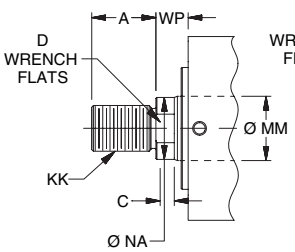

Thread Style 8

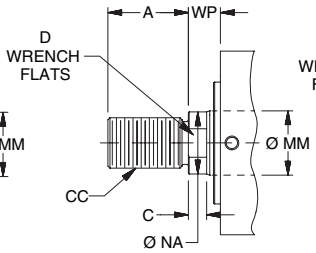

Thread Style 9

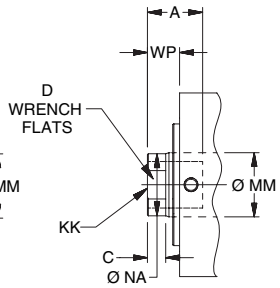

Style 55

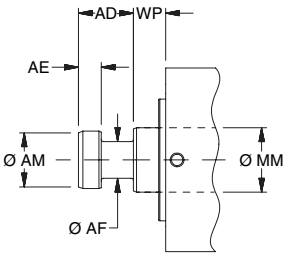

"Special" Thread Style 3

Special thread, extension, rod eye, blank, etc. are also available.

To order, specify "Style 3" and give desired dimensions for KK, A, & WP. If otherwise special furnish dimensional sketch.

CHD

www.comoso.com

Parker Hannifin Corporation
Industrial Cylinder Division
Des Plaines, Illinois USA

Style M Metric Tapped Both Ends Mount – Single Rod End – 20mm to 80mm Bore Size

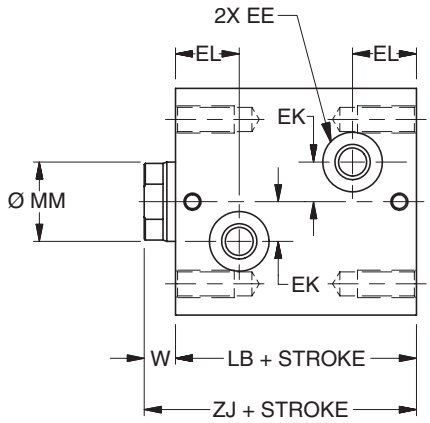

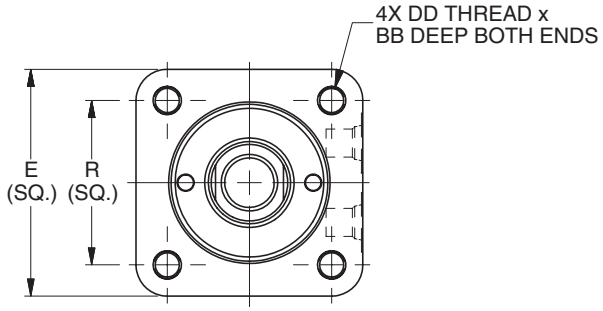

M Mount Single Rod End – Envelope and Mounting Dimensions

Bore Ø	BB	DD	E	EE			EK	EL	R	W	Add Stroke	
				SAE	NPT	BSP					LB	ZJ
20	10	M5x0.8 - 6H	44	# 2[1]	1/8	G-1/8	6	16.5	30	8	43	51
25	10.4	M5x0.8 - 6H	50	# 2[1]	1/8	G-1/8	8	17.5	36	8	45	53
32	12.5	M6x1 - 6H	62	# 4	1/4	G-1/4	11	20.5	47	10	51	61
40	16.6	M8x1.25 - 6H	70	# 4	1/4	G-1/4	12	21	52	10	55	65
50	20.7	M10x1.5 - 6H	80	# 4	1/4	G-1/4	14	22.5	58	11	60	71
63	24.9	M12x1.75 - 6H	94	# 4	1/4	G-1/4	17	26	69	13	67	80
80	29.0	M14x2 - 6H	114	# 6	3/8	G-3/8	20	29.5	86	17	78	95

[1] Parker Triple-Lok™ Straight Thread Connector SAE #2 to ¼" 37° flare can be used when this port thread is required. Contact your local Parker Tube Fitting distributor and specify part number 4-2 F5OX.

M Mount Single Rod End – Rod Dimensions

Bore Ø	MM Rod Ø	Rod End														Rod Extension Dimensions		
		Style 9M		Style 4M		Style 9A		Style 4A		Style 8A		Style 55M						
		KK	A	KK	A	KK	A	KK	A	CC	A	AD	AE	AF	AM	C	D	NA
20	12	M8x1.25	10	M8x1	14	5/16-24	10	5/16-24	14	3/8-24	16	8	3	6	11	6	10	11
25	14	M10x1.5	12	M10x1.25	16	3/8-24	12	3/8-24	16	1/2-20	18	12	4	8	13	6	12	13
32	18	M12x1.75	15	M12x1.25	18	7/16-20	15	7/16-20	18	9/16-18	25	16	6	10	16	8	15	17
40	22	M16x2	20	M16x1.5	22	5/8-18	20	5/8-18	22	3/4-16	30	20	8	12	20	8	19	21
50	28	M20x2.5	24	M20x1.5	28	3/4-16	24	3/4-16	28	7/8-14	35	24	10	16	25	9	24	27
63	36	M27x3	30	M27x2	36	1-14	30	1-14	36	1 1/4-12	45	28	12	22	33	11	32	35
80	45	M33x3.5	35	M33x2	45	1 1/4-12	35	1 1/4-12	45	1 1/2-12	56	34	14	28	41	13	39	43

Rod End Dimensions

Thread Style 4

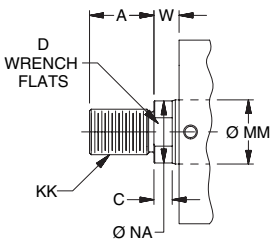

Thread Style 8

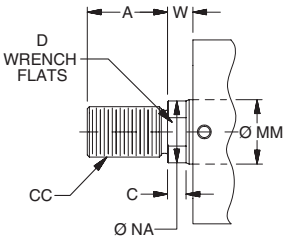

Thread Style 9

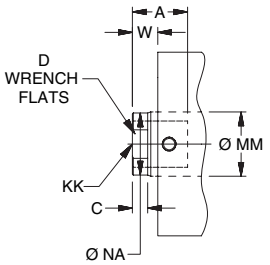

Style 55

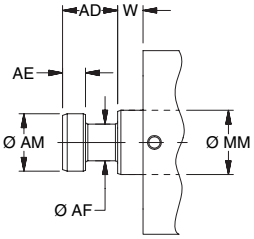

"Special" Thread Style 3

Special thread, extension, rod eye, blank, etc. are also available.

To order, specify "Style 3" and give desired dimensions for KK, A, & W. If otherwise special furnish dimensional sketch.

www.comoso.com

Parker Hannifin Corporation
Industrial Cylinder Division
Des Plaines, Illinois USA

Style M Metric Tapped Both Ends Mount – Double Rod End – 20mm to 80mm Bore Size

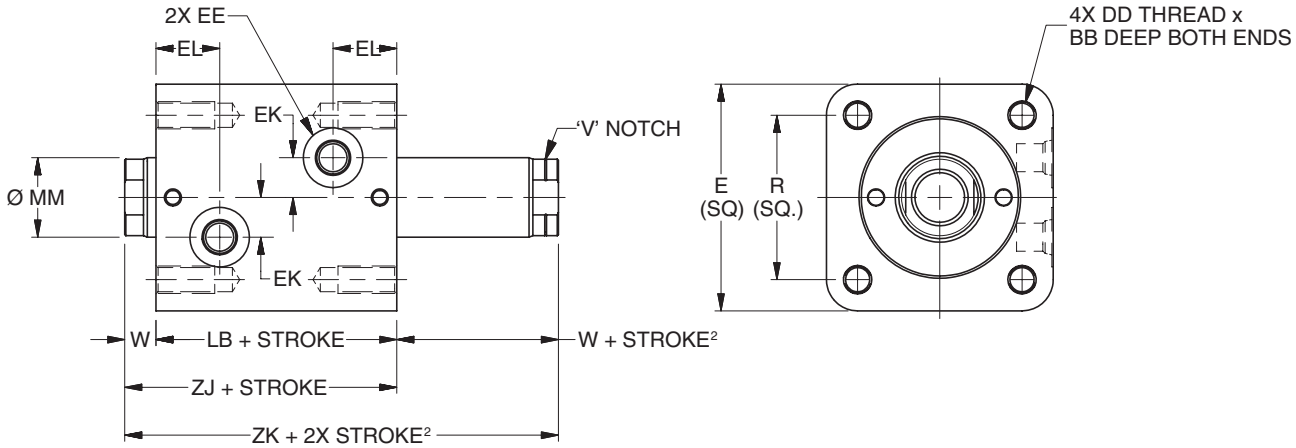

M Mount Double Rod End – Envelope and Mounting Dimensions

Bore	BB	DD	E	EE			EK	EL	R	W²	Add Stroke		Add 2X Stroke
				SAE	NPT	BSP					LB	ZJ	ZK²
20	10	M5x0.8 - 6H	44	# 2¹	1/8	G-1/8	6	16.5	30	8	43	51	59
25	10.4	M5x0.8 - 6H	50	# 2¹	1/8	G-1/8	8	17.5	36	8	45	53	61
32	12.5	M6x1 - 6H	62	# 4	1/4	G-1/4	11	20.5	47	10	51	61	71
40	16.6	M8x1.25 - 6H	70	# 4	1/4	G-1/4	12	21	52	10	55	65	75
50	20.7	M10x1.5 - 6H	80	# 4	1/4	G-1/4	14	22.5	58	11	60	71	82
63	24.9	M12x1.75 - 6H	94	# 4	1/4	G-1/4	17	26	69	13	67	80	93
80	29.0	M14x2 - 6H	114	# 6	3/8	G-3/8	20	29.5	86	17	78	95	112

[1] Parker Triple-Lok™ Straight Thread Connector SAE #2 to ¼" 37° flare can be used when this port thread is required. Contact your local Parker Tube Fitting distributor and specify part number 4-2 F5OX.

[2] Minimum 'W + Stroke' on V notch rod side may apply. See minimum rod extension page for details.

M Mount Double Rod End – Rod Dimensions

Bore Ø	MM Rod Ø	Rod End														Rod Extension Dimensions		
		Style 9M²		Style 4M		Style 9A²		Style 4A		Style 8A		Style 55M						
		KK	A	KK	A	KK	A	KK	A	CC	A	AD	AE	AF	AM	C	D	NA
20	12	M8x1.25	10	M8x1	14	5/16-24	10	5/16-24	14	3/8-24	16	8	3	6	11	6	10	11
25	14	M10x1.5	12	M10x1.25	16	3/8-24	12	3/8-24	16	1/2-20	18	12	4	8	13	6	12	13
32	18	M12x1.75	15	M12x1.25	18	7/16-20	15	7/16-20	18	9/16-18	25	16	6	10	16	8	15	17
40	22	M16x2	20	M16x1.5	22	5/8-18	20	5/8-18	22	3/4-16	30	20	8	12	20	8	19	21
50	28	M20x2.5	24	M20x1.5	28	3/4-16	24	3/4-16	28	7/8-14	35	24	10	16	25	9	24	27
63	36	M27x3	30	M27x2	36	1-14	30	1-14	36	1 1/4-12	45	28	12	22	33	11	32	35
80	45	M33x3.5	35	M33x2	45	1 1/4-12	35	1 1/4-12	45	1 1/2-12	56	34	14	28	41	13	39	43

Rod End Dimensions

Thread Style 4

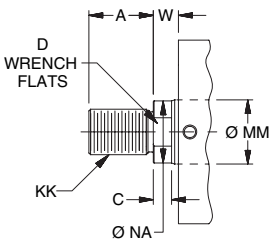

Thread Style 8

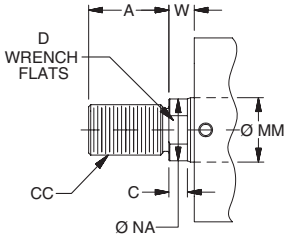

Thread Style 9

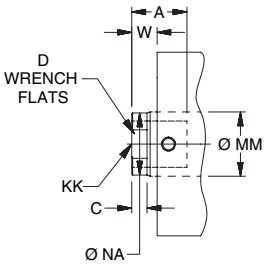

Style 55

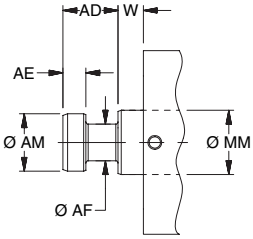

"Special" Thread Style 3

Special thread, extension, rod eye, blank, etc. are also available.

To order, specify "Style 3" and give desired dimensions for KK, A, & W. If otherwise special furnish dimensional sketch.

CHD

www.comoso.com

Parker Hannifin Corporation
Industrial Cylinder Division
Des Plaines, Illinois USA

Styles MN and MR Metric Tapped Both Ends Mounts with Pilot Gland or Pilot Cap – Single Rod End – 20mm to 80mm Bore Size

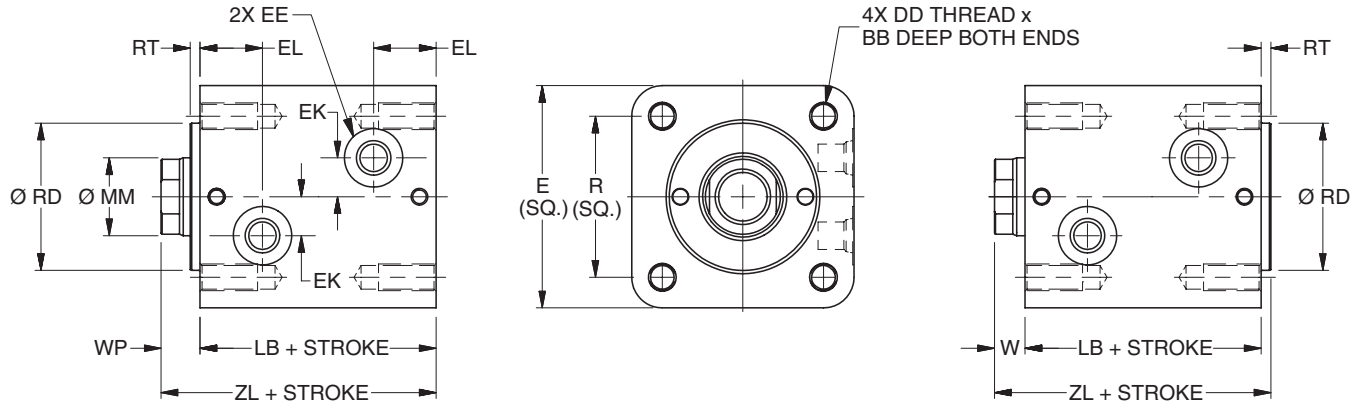

Style MN Metric Tapped Both Ends Mount with Pilot Gland

Style MR Metric Tapped Both Ends Mount with Pilot Cap

MN and MR Mount Single Rod End – Envelope and Mounting Dimensions

Bore	BB	DD	E	EE			EK	EL	R	RD Ø f9	RT	W	WP	Add Stroke	
				SAE	NPT	BSP								LB	ZL
20	10	M5x0.8 - 6H	44	# 2[1]	1/8	G-1/8	6	16.5	30	24	3	8	11	43	54
25	10.4	M5x0.8 - 6H	50	# 2[1]	1/8	G-1/8	8	17.5	36	27	3	8	11	45	56
32	12.5	M6x1 - 6H	62	# 4	1/4	G-1/4	11	20.5	47	36	3	10	13	51	64
40	16.6	M8x1.25 - 6H	70	# 4	1/4	G-1/4	12	21	52	43	3	10	13	55	68
50	20.7	M10x1.5 - 6H	80	# 4	1/4	G-1/4	14	22.5	58	53	3	11	14	60	74
63	24.9	M12x1.75 - 6H	94	# 4	1/4	G-1/4	17	26	69	66	3	13	16	67	83
80	29.0	M14x2 - 6H	114	# 6	3/8	G-3/8	20	29.5	86	83	3	17	20	78	98

[1] Parker Triple-Lok™ Straight Thread Connector SAE #2 to ¼" 37° flare can be used when this port thread is required. Contact your local Parker Tube Fitting distributor and specify part number 4-2 F5OX.

MN and MR Mount Single Rod End – Rod Dimensions

Bore Ø	MM Rod Ø	Rod End														Rod Extension Dimensions		
		Style 9M		Style 4M		Style 9A		Style 4A		Style 8A		Style 55M						
		KK	A	KK	A	KK	A	KK	A	CC	A	AD	AE	AF	AM	C	D	NA
20	12	M8x1.25	10	M8x1	14	5/16-24	10	5/16-24	14	3/8-24	16	8	3	6	11	6	10	11
25	14	M10x1.5	12	M10x1.25	16	3/8-24	12	3/8-24	16	1/2-20	18	12	4	8	13	6	12	13
32	18	M12x1.75	15	M12x1.25	18	7/16-20	15	7/16-20	18	9/16-18	25	16	6	10	16	8	15	17
40	22	M16x2	20	M16x1.5	22	5/8-18	20	5/8-18	22	3/4-16	30	20	8	12	20	8	19	21
50	28	M20x2.5	24	M20x1.5	28	3/4-16	24	3/4-16	28	7/8-14	35	24	10	16	25	9	24	27
63	36	M27x3	30	M27x2	36	1-14	30	1-14	36	1 1/4-12	45	28	12	22	33	11	32	35
80	45	M33x3.5	35	M33x2	45	1 1/4-12	35	1 1/4-12	45	1 1/2-12	56	34	14	28	41	13	39	43

Rod End Dimensions

Thread Style 4

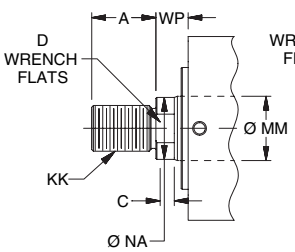

Thread Style 8

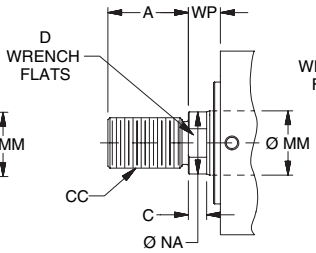

Thread Style 9

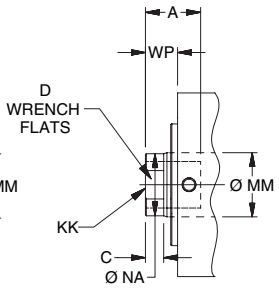

Style 55

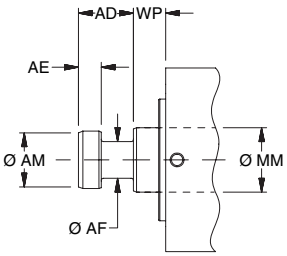

"Special" Thread Style 3

Special thread, extension, rod eye, blank, etc. are also available.

To order, specify "Style 3" and give desired dimensions for KK, A, & W (MR Mount) or WP (MN Mount) If otherwise special furnish dimensional sketch.

www.comoso.com

Parker Hannifin Corporation
Industrial Cylinder Division
Des Plaines, Illinois USA

Style MN Metric Tapped Both Ends Mount with Pilot Gland – Double Rod End – 20mm to 80mm Bore Size

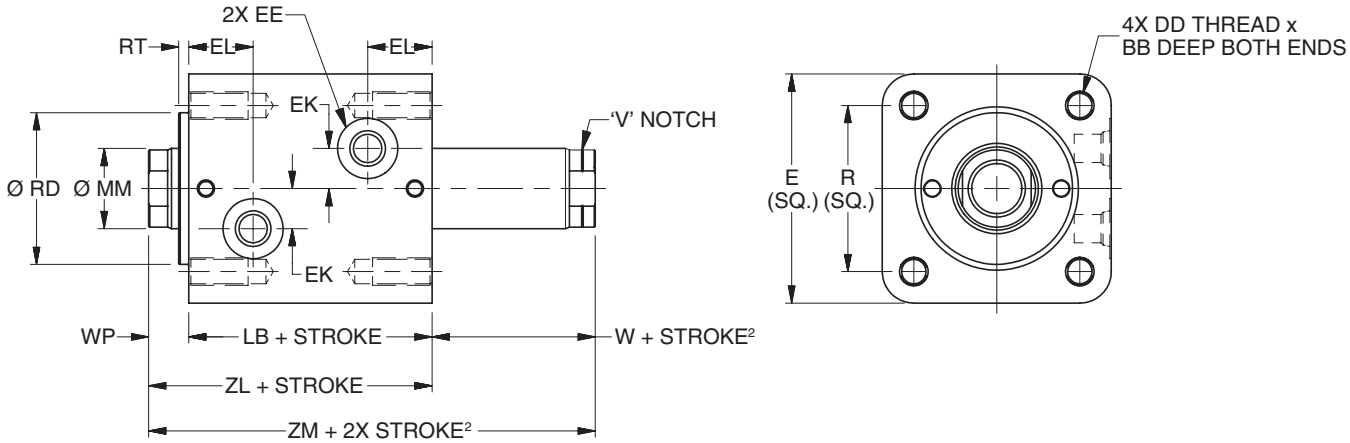

MN Mount Double Rod End – Envelope and Mounting Dimensions

Bore Ø	BB	DD	E	EE			EK	EL	R	RD Ø f9	RT	W²	WP	Add Stroke		Add 2X Stroke
				SAE	NPTF	BSP								LB	ZL	ZM²
20	10	M5x0.8 - 6H	44	# 2[1]	1/8	G-1/8	6	16.5	30	24	3	8	11	43	54	62
25	10.4	M5x0.8 - 6H	50	# 2[1]	1/8	G-1/8	8	17.5	36	27	3	8	11	45	56	64
32	12.5	M6x1 - 6H	62	# 4	1/4	G-1/4	11	20.5	47	36	3	10	13	51	64	74
40	16.6	M8x1.25 - 6H	70	# 4	1/4	G-1/4	12	21	52	43	3	10	13	55	68	78
50	20.7	M10x1.5 - 6H	80	# 4	1/4	G-1/4	14	22.5	58	53	3	11	14	60	74	85
63	24.9	M12x1.75 - 6H	94	# 4	1/4	G-1/4	17	26	69	66	3	13	16	67	83	96
80	29.0	M14x2 - 6H	114	# 6	3/8	G-3/8	20	29.5	86	83	3	17	20	78	98	115

[1] Parker Triple-Lok™ Straight Thread Connector SAE #2 to ¼" 37° flare can be used when this port thread is required. Contact your local Parker Tube Fitting distributor and specify part number 4-2 F5OX.

[2] Minimum 'W + Stroke' on V notch rod side may apply. See minimum rod extension page for details.

MN Mount Double Rod End – Rod Dimensions

Bore Ø	MM Rod Ø	Rod End														Rod Extension Dimensions		
		Style 9M²		Style 4M		Style 9A²		Style 4A		Style 8A		Style 55M						
		KK	A	KK	A	KK	A	KK	A	CC	A	AD	AE	AF	AM	C	D	NA
20	12	M8x1.25	10	M8x1	14	5/16-24	10	5/16-24	14	3/8-24	16	8	3	6	11	6	10	11
25	14	M10x1.5	12	M10x1.25	16	3/8-24	12	3/8-24	16	1/2-20	18	12	4	8	13	6	12	13
32	18	M12x1.75	15	M12x1.25	18	7/16-20	15	7/16-20	18	9/16-18	25	16	6	10	16	8	15	17
40	22	M16x2	20	M16x1.5	22	5/8-18	20	5/8-18	22	3/4-16	30	20	8	12	20	8	19	21
50	28	M20x2.5	24	M20x1.5	28	3/4-16	24	3/4-16	28	7/8-14	35	24	10	16	25	9	24	27
63	36	M27x3	30	M27x2	36	1-14	30	1-14	36	1 1/4-12	45	28	12	22	33	11	32	35
80	45	M33x3.5	35	M33x2	45	1 1/4-12	35	1 1/4-12	45	1 1/2-12	56	34	14	28	41	13	39	43

Rod End Dimensions

Thread Style 4

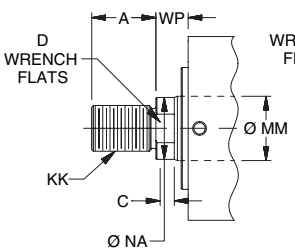

Thread Style 8

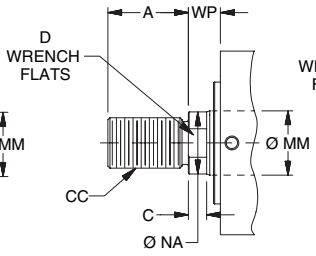

Thread Style 9

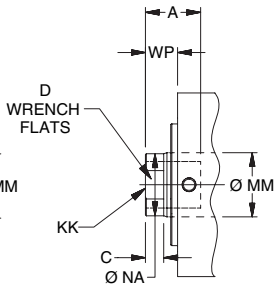

Style 55

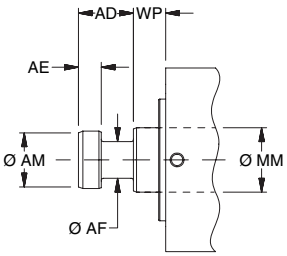

"Special" Thread Style 3

Special thread, extension, rod eye, blank, etc. are also available.

To order, specify "Style 3" and give desired dimensions for KK, A, & WP. If otherwise special furnish dimensional sketch.

CHD

www.comoso.com

Styles J Rectangular Head Flange & H Rectangular Cap Flange Mounts – Single Rod End – 20mm to 80mm Bore Size

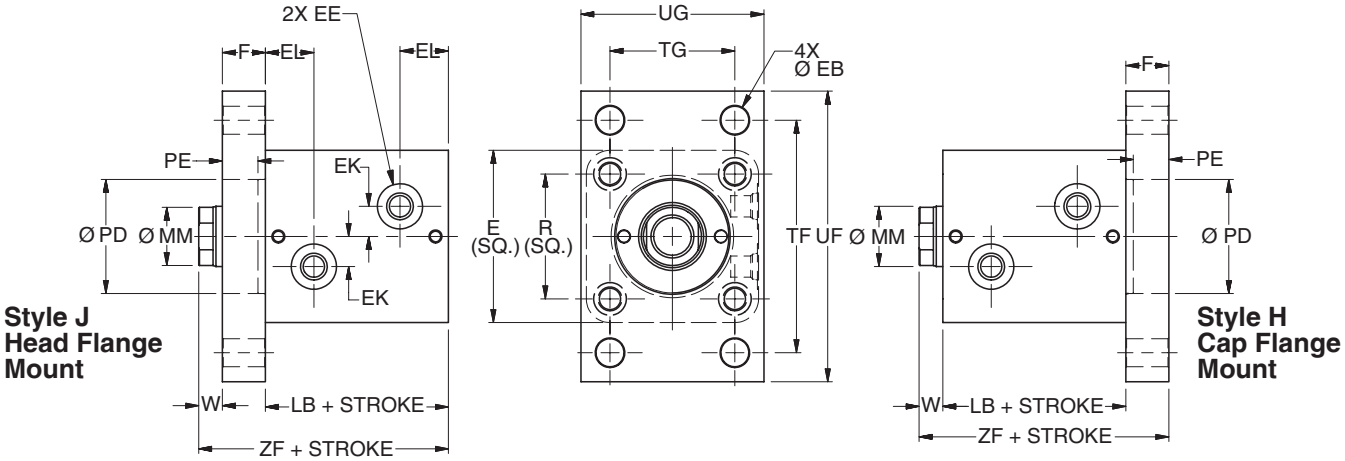

J & H Mounts Single Rod End – Envelope and Mounting Dimensions

Bore Ø	E	EE			EK	EL	F	EB Ø	PD Ø H9	PE	R	TF	TG	UF	UG	W	Add Stroke	
		SAE	NPTF	BSP													LB	ZF
20	44	#2[1]	1/8	G-1/8	6	16.5	10	5.5	24	7	30	60	30	75	46	8	43	61
25	50	#2[1]	1/8	G-1/8	8	17.5	12	5.5	27	9	36	66	36	80	52	8	45	65
32	62	#4	1/4	G-1/4	11	20.5	12	6.8	36	9	47	80	40	95	62	10	51	73
40	70	#4	1/4	G-1/4	12	21	16	11	43	13	52	96	46	118	70	10	55	81
50	80	#4	1/4	G-1/4	14	22.5	20	13.5	53	17	58	108	58	135	85	11	60	91
63	94	#4	1/4	G-1/4	17	26	20	15	66	17	69	124	65	150	98	13	67	100
80	114	#6	3/8	G-3/8	20	29.5	25	17	83	21	86	154	87	185	118	17	78	120

[1] Parker Triple-Lok™ Straight Thread Connector SAE #2 to ¼" 37° flare can be used when this port thread is required. Contact your local Parker Tube Fitting distributor and specify part number 4-2 F5OX.

J & H Mounts Single Rod End – Rod Dimensions

Bore Ø	MM Rod Ø	Rod End														Rod Extension Dimensions		
		Style 9M		Style 4M		Style 9A		Style 4A		Style 8A		Style 55M						
		KK	A	KK	A	KK	A	KK	A	CC	A	AD	AE	AF	AM	C	D	NA
20	12	M8x1.25	10	M8x1	14	5/16-24	10	5/16-24	14	3/8-24	16	8	3	6	11	6	10	11
25	14	M10x1.5	12	M10x1.25	16	3/8-24	12	3/8-24	16	1/2-20	18	12	4	8	13	6	12	13
32	18	M12x1.75	15	M12x1.25	18	7/16-20	15	7/16-20	18	9/16-18	25	16	6	10	16	8	15	17
40	22	M16x2	20	M16x1.5	22	5/8-18	20	5/8-18	22	3/4-16	30	20	8	12	20	8	19	21
50	28	M20x2.5	24	M20x1.5	28	3/4-16	24	3/4-16	28	7/8-14	35	24	10	16	25	9	24	27
63	36	M27x3	30	M27x2	36	1-14	30	1-14	36	1 1/4-12	45	28	12	22	33	11	32	35
80	45	M33x3.5	35	M33x2	45	1 1/4-12	35	1 1/4-12	45	1 1/2-12	56	34	14	28	41	13	39	43

Rod End Dimensions

Thread Style 4

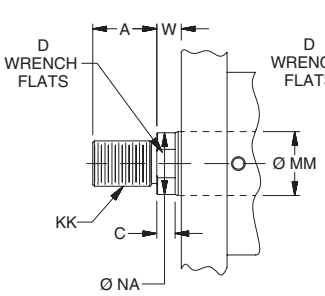

Thread Style 8

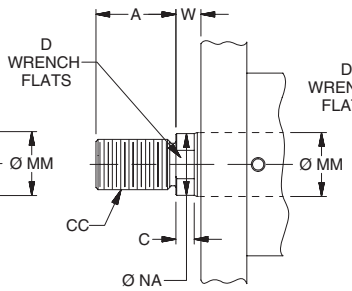

Thread Style 9

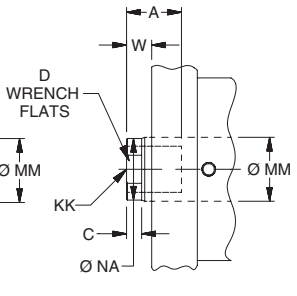

Style 55

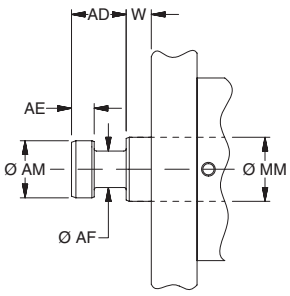

"Special" Thread Style 3

Special thread, extension, rod eye, blank, etc. are also available.

To order, specify "Style 3" and give desired dimensions for KK, A, & W. If otherwise special furnish dimensional sketch.

www.comoso.com

Parker Hannifin Corporation
Industrial Cylinder Division
Des Plaines, Illinois USA

Style J Rectangular Head Flange Mount – Double Rod End – 20mm to 80mm Bore Size

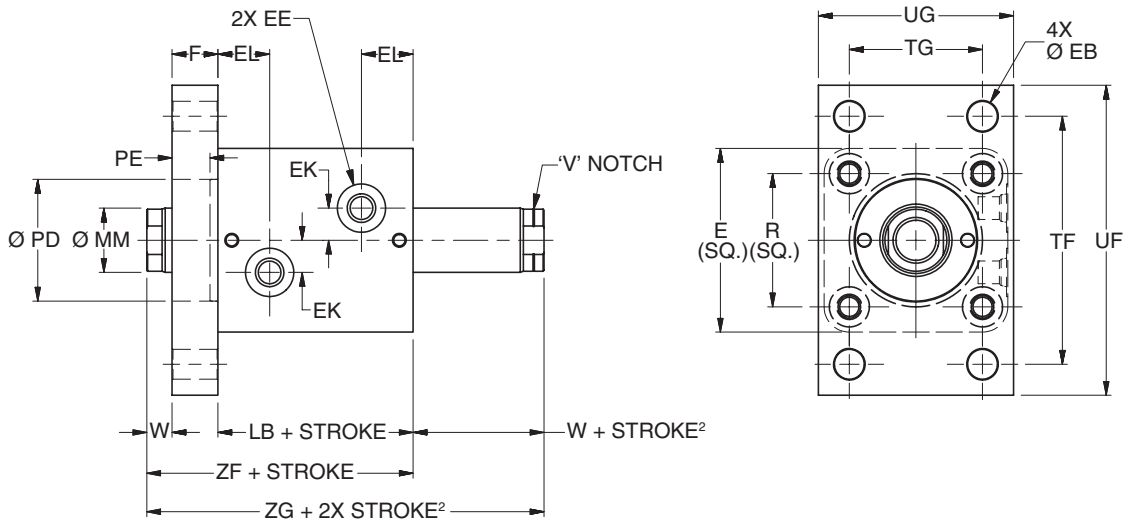

J Mount Double Rod End – Envelope and Mounting Dimensions

Bore Ø	E	EE			EK	EL	F	EB Ø	PD Ø H9	PE	R	TF	TG	UF	UG	W²	Add Stroke		Add 2X Stroke
		SAE	NPTF	BSP													LB	ZF	ZG²
20	44	#2¹	1/8	G-1/8	6	16.5	10	5.5	24	7	30	60	30	75	46	8	43	61	69
25	50	#2¹	1/8	G-1/8	8	17.5	12	5.5	27	9	36	66	36	80	52	8	45	65	73
32	62	#4	1/4	G-1/4	11	20.5	12	6.8	36	9	47	80	40	95	62	10	51	73	83
40	70	#4	1/4	G-1/4	12	21	16	11	43	13	52	96	46	118	70	10	55	81	91
50	80	#4	1/4	G-1/4	14	22.5	20	13.5	53	17	58	108	58	135	85	11	60	91	102
63	94	#4	1/4	G-1/4	17	26	20	15	66	17	69	124	65	150	98	13	67	100	113
80	114	#6	3/8	G-3/8	20	29.5	25	17	83	21	86	154	87	185	118	17	78	120	137

[1] Parker Triple-Lok™ Straight Thread Connector SAE #2 to ¼" 37° flare can be used when this port thread is required. Contact your local Parker Tube Fitting distributor and specify part number 4-2 F5OX.

[2] Minimum 'W + Stroke' on V notch rod side may apply. See minimum rod extension page for details.

J Mount Double Rod End – Rod Dimensions

Bore Ø	MM Rod Ø	Rod End														Rod Extension Dimensions		
		Style 9M²		Style 4M		Style 9A²		Style 4A		Style 8A		Style 55M						
		KK	A	KK	A	KK	A	KK	A	CC	A	AD	AE	AF	AM	C	D	NA
20	12	M8x1.25	10	M8x1	14	5/16-24	10	5/16-24	14	3/8-24	16	8	3	6	11	6	10	11
25	14	M10x1.5	12	M10x1.25	16	3/8-24	12	3/8-24	16	1/2-20	18	12	4	8	13	6	12	13
32	18	M12x1.75	15	M12x1.25	18	7/16-20	15	7/16-20	18	9/16-18	25	16	6	10	16	8	15	17
40	22	M16x2	20	M16x1.5	22	5/8-18	20	5/8-18	22	3/4-16	30	20	8	12	20	8	19	21
50	28	M20x2.5	24	M20x1.5	28	3/4-16	24	3/4-16	28	7/8-14	35	24	10	16	25	9	24	27
63	36	M27x3	30	M27x2	36	1-14	30	1-14	36	1 1/4-12	45	28	12	22	33	11	32	35
80	45	M33x3.5	35	M33x2	45	1 1/4-12	35	1 1/4-12	45	1 1/2-12	56	34	14	28	41	13	39	43

Rod End Dimensions

Thread Style 4

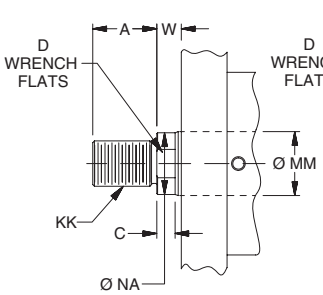

Thread Style 8

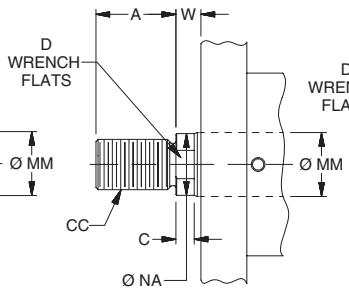

Thread Style 9

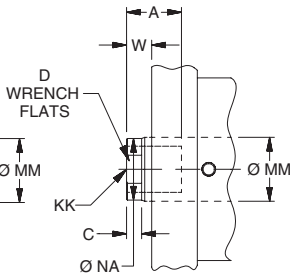

Style 55

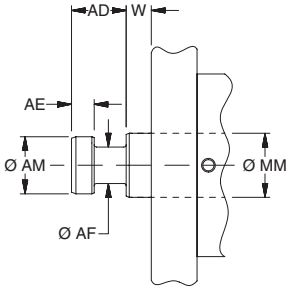

"Special" Thread Style 3

Special thread, extension, rod eye, blank, etc. are also available.

To order, specify "Style 3" and give desired dimensions for KK, A, & W. If otherwise special furnish dimensional sketch.

www.comoso.com

Parker Hannifin Corporation
Industrial Cylinder Division
Des Plaines, Illinois USA

CHD

Style C Foot Mount – Single Rod End – 25mm to 63mm Bore Size

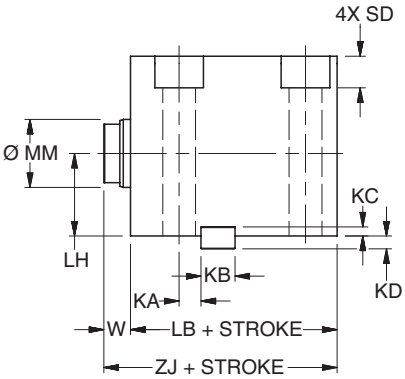

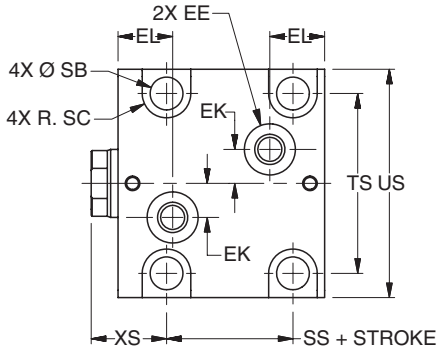

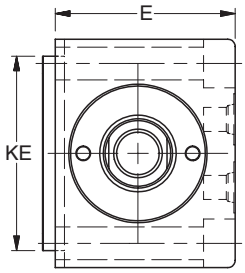

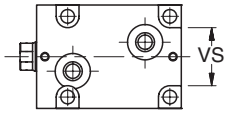

25mm & 32mm BOLT HOLE DETAIL

C Mount Single Rod End – Envelope and Mounting Dimensions

Bore Ø	E	ED Ø	EE				EF	EK	EL	EM	KA	KB	KC	KD	KE
			SAE	NPT	BSP	Mani-fold									
25	45	10	# 2[1]	1/8	G-1/8	3	2	7	17.5	15.8	8.5	8	3.25	3.75	45
32	56	10	# 4	1/4	G-1/4	3	2	11	20.5	18.5	8	12	3.25	4.75	63
40	64	12	# 4	1/4	G-1/4	3	2	12	21	19	8	12	3.25	4.75	70
50	74	15	# 4	1/4	G-1/4	4	2	14	22.5	21	9	14	3.75	5.25	80
63	89	15	# 4	1/4	G-1/4	4	2	17	26	24.5	11	16	4.25	5.75	100

[1] Parker Triple-Lok™ Straight Thread Connector SAE #2 to ¼" 37° flare can be used when this port thread is required. Contact your local Parker Tube Fitting distributor and specify part number 4-2 F5OX.

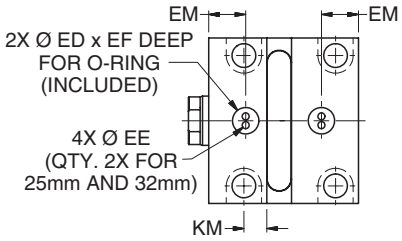

MANIFOLD PORT OPTION DETAIL
CAUTION: KM key slot location is for manifold ports only. Do not use for top mounted ports. KA key slot location is for top mounted ports. Do not use for manifold ports.

C Mount Single Rod End – Rod Dimensions

Bore Ø	KM	LH	SB Ø	SC	SD	TS	US	VS	W	XS	Add Stroke			Min. Stroke For M Port
											LB	SS	ZJ	
25	8.5	20	6.8	5.5	6.5	39	50	28	8	23	45	24.5	53	10
32	8	25	9	7	8.6	56	70	42	10	30	51	24	61	15
40	8	29	11	8.75	10.8	62	80	-	10	30	55	23	65	15
50	13	34	13.5	10	13	74	94	-	11	31	60	27	71	20
63	15.5	42	16	11.5	15.2	90	114	-	13	33	67	32	80	20

C Mount Single Rod End – Rod Dimensions

Bore Ø	MM Rod Ø	Rod End														Rod Extension Dimensions		
		Style 9M		Style 4M		Style 9A		Style 4A		Style 8A		Style 55M						
		KK	A	KK	A	KK	A	KK	A	CC	A	AD	AE	AF	AM	C	D	NA
25	14	M10x1.5	12	M10x1.25	16	3/8-24	12	3/8-24	16	1/2-20	18	12	4	8	13	6	12	13
32	18	M12x1.75	15	M12x1.25	18	7/16-20	15	7/16-20	18	9/16-18	25	16	6	10	16	8	15	17
40	22	M16x2	20	M16x1.5	22	5/8-18	20	5/8-18	22	3/4-16	30	20	8	12	20	8	19	21
50	28	M20x2.5	24	M20x1.5	28	3/4-16	24	3/4-16	28	7/8-14	35	24	10	16	25	9	24	27
63	36	M27x3	30	M27x2	36	1-14	30	1-14	36	1 1/4-12	45	28	12	22	33	11	32	35

Rod End Dimensions

Thread Style 4

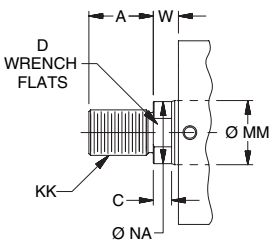

Thread Style 8

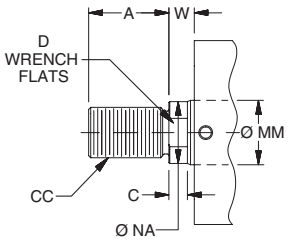

Thread Style 9

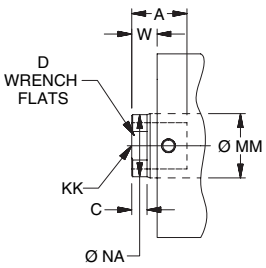

Style 55

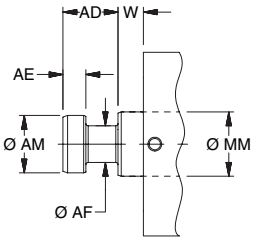

"Special" Thread Style 3

Special thread, extension, rod eye, blank, etc. are also available.

To order, specify "Style 3" and give desired dimensions for KK, A, & W. If otherwise special furnish dimensional sketch.

www.comoso.com

Style C Foot Mount – Double Rod End – 25mm to 63mm Bore Size

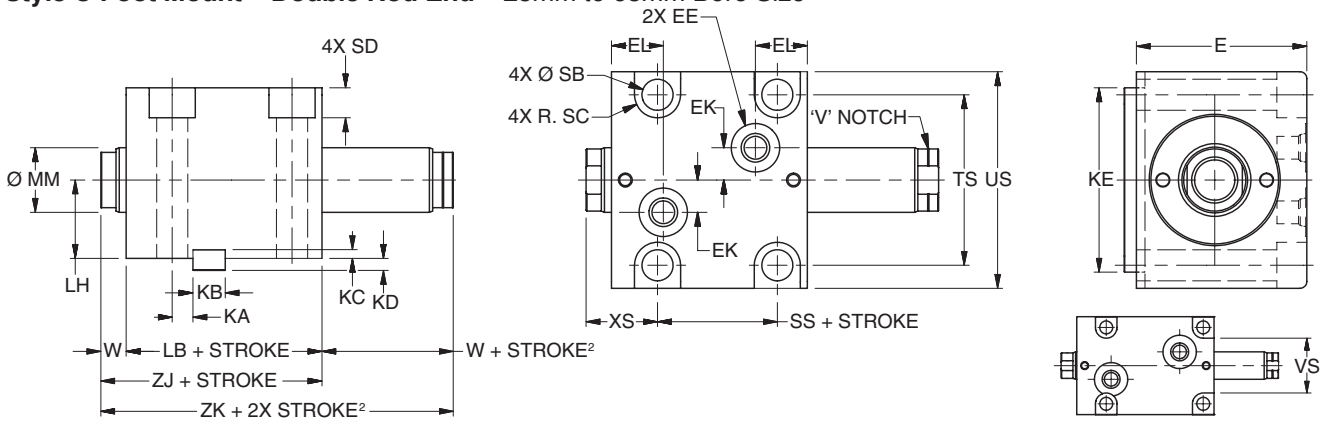

C Mount Double Rod End – Envelope and Mounting Dimensions

Bore Ø	E	ED Ø	EE				EF	EK	EL	EM	KA	KB	KC	KD	KE
			SAE	NPT	BSP	Man-ifold									
25	45	10	# 2[1]	1/8	G-1/8	3	2	7	17.5	15.8	8.5	8	3.25	3.75	45
32	56	10	# 4	1/4	G-1/4	3	2	11	20.5	18.5	8	12	3.25	4.75	63
40	64	12	# 4	1/4	G-1/4	3	2	12	21	19	8	12	3.25	4.75	70
50	74	15	# 4	1/4	G-1/4	4	2	14	22.5	21	9	14	3.75	5.25	80
63	89	15	# 4	1/4	G-1/4	4	2	17	26	24.5	11	16	4.25	5.75	100

[1] Parker Triple-Lok™ Straight Thread Connector SAE #2 to ¼" 37° flare can be used when this port thread is required. Contact your local Parker Tube Fitting distributor and specify part number 4-2 F5OX.

[2] Minimum 'W + Stroke' on V notch rod side may apply. See minimum rod extension page for details.

25mm & 32mm BOLT HOLE DETAIL

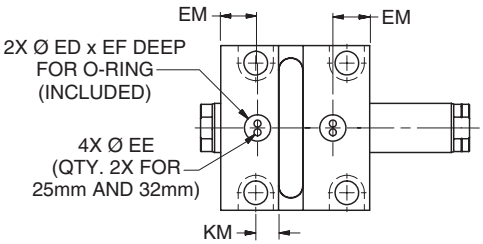

MANIFOLD PORT OPTION DETAIL
CAUTION: KM key slot location is for manifold ports only. Do not use for top mounted ports. KA key slot location is for top mounted ports. Do not use for manifold ports.

C Mount Double Rod End – Rod Dimensions

Bore Ø	KM	LH	SB Ø	SC	SD	TS	US	VS	W[2]	XS	Add Stroke			Add 2X Stroke	Min. Stroke For M Port
											LB	SS	ZJ	ZK[2]	
25	8.5	20	6.8	5.5	6.5	39	50	28	8	23	45	24.5	53	61	10
32	8	25	9	7	8.6	56	70	42	10	30	51	24	61	71	15
40	8	29	11	8.75	10.8	62	80	-	10	30	55	23	65	75	15
50	13	34	13.5	10	13	74	94	-	11	31	60	27	71	82	20
63	15.5	42	16	11.5	15.2	90	114	-	13	33	67	32	80	93	20

C Mount Single Rod End – Rod Dimensions

Bore Ø	MM Rod Ø	Rod End														Rod Extension Dimensions		
		Style 9M[2]		Style 4M		Style 9A[2]		Style 4A		Style 8A		Style 55M						
		KK	A	KK	A	KK	A	KK	A	CC	A	AD	AE	AF	AM	C	D	NA
25	14	M10x1.5	12	M10x1.25	16	3/8-24	12	3/8-24	16	1/2-20	18	12	4	8	13	6	12	13
32	18	M12x1.75	15	M12x1.25	18	7/16-20	15	7/16-20	18	9/16-18	25	16	6	10	16	8	15	17
40	22	M16x2	20	M16x1.5	22	5/8-18	20	5/8-18	22	3/4-16	30	20	8	12	20	8	19	21
50	28	M20x2.5	24	M20x1.5	28	3/4-16	24	3/4-16	28	7/8-14	35	24	10	16	25	9	24	27
63	36	M27x3	30	M27x2	36	1-14	30	1-14	36	1 1/4-12	45	28	12	22	33	11	32	35

Rod End Dimensions

Thread Style 4

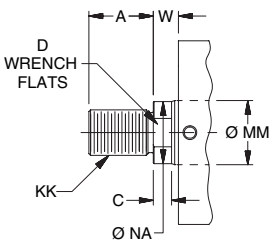

Thread Style 8

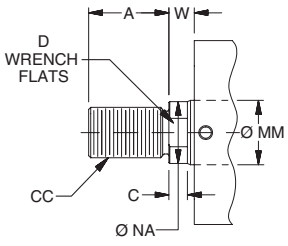

Thread Style 9

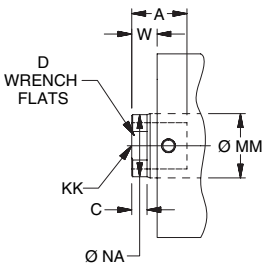

Style 55

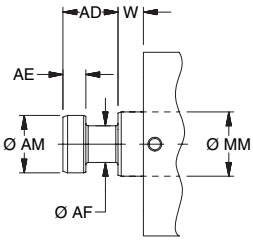

"Special" Thread Style 3

Special thread, extension, rod eye, blank, etc. are also available.

To order, specify "Style 3" and give desired dimensions for KK, A, & W. If otherwise special furnish dimensional sketch.

CHD

www.comoso.com

Parker Hannifin Corporation
Industrial Cylinder Division
Des Plaines, Illinois USA

Style CN Foot Mount with Pilot Gland – Single Rod End – 25mm to 63mm Bore Size

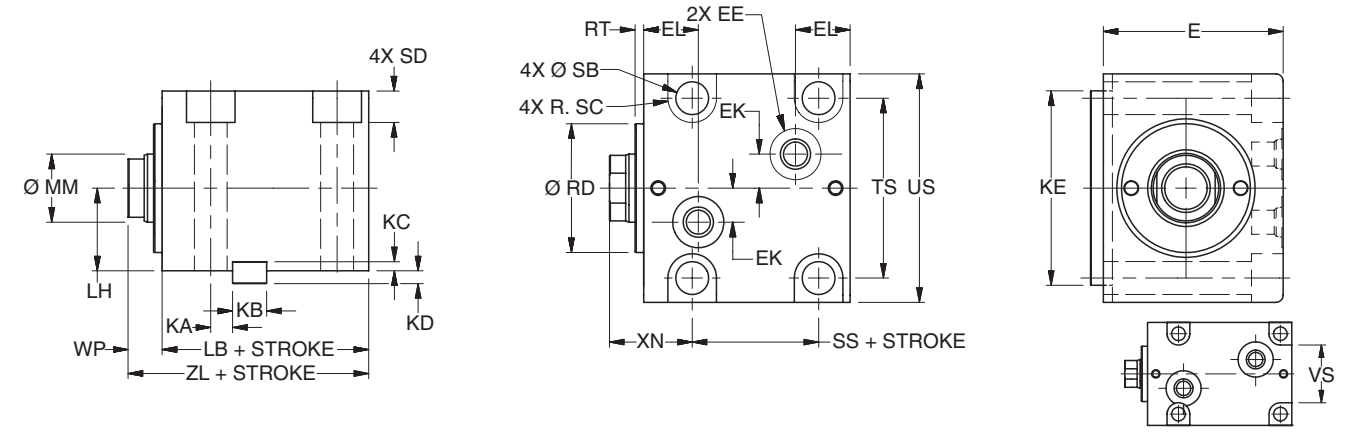

CN Mount Single Rod End – Envelope and Mounting Dimensions

Bore Ø	E	ED Ø	EE				EF	EK	EL	EM	KA	KB	KC	KD	KE
			SAE	NPT	BSP	Mani-fold									
25	45	10	# 2[1]	1/8	G-1/8	3	2	7	17.5	15.8	8.5	8	3.25	3.75	45
32	56	10	# 4	1/4	G-1/4	3	2	11	20.5	18.5	8	12	3.25	4.75	63
40	64	12	# 4	1/4	G-1/4	3	2	12	21	19	8	12	3.25	4.75	70
50	74	15	# 4	1/4	G-1/4	4	2	14	22.5	21	9	14	3.75	5.25	80
63	89	15	# 4	1/4	G-1/4	4	2	17	26	24.5	11	16	4.25	5.75	100

[1] Parker Triple-Lok™ Straight Thread Connector SAE #2 to ¼" 37° flare can be used when this port thread is required. Contact your local Parker Tube Fitting distributor and specify part number 4-2 F5OX.

25mm & 32mm BOLT HOLE DETAIL

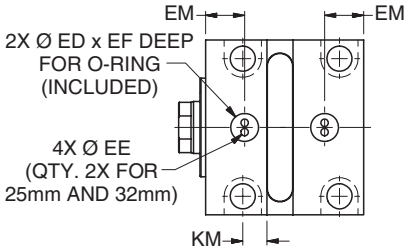

MANIFOLD PORT OPTION DETAIL
CAUTION: KM key slot location is for manifold ports only. Do not use for top mounted ports. KA key slot location is for top mounted ports. Do not use for manifold ports.

CN Mount Single Rod End – Rod Dimensions

Bore Ø	KM	LH	RD Ø f9	RT	SB Ø	SC	SD	TS	US	VS	WP	XN	Add Stroke			Min. Stroke For M Port
													LB	SS	ZL	
25	8.5	20	27	3	6.8	5.5	6.5	39	50	28	11	26	45	24.5	56	10
32	8	25	36	3	9	7	8.6	56	70	42	13	33	51	24	64	15
40	8	29	43	3	11	8.75	10.8	62	80	-	13	33	55	23	68	15
50	13	34	53	3	13.5	10	13	74	94	-	14	34	60	27	74	20
63	15.5	42	66	3	16	11.5	15.2	90	114	-	16	36	67	32	83	20

CN Mount Single Rod End – Rod Dimensions

Bore Ø	MM Rod Ø	Rod End														Rod Extension Dimensions		
		Style 9M		Style 4M		Style 9A		Style 4A		Style 8A		Style 55M						
		KK	A	KK	A	KK	A	KK	A	CC	A	AD	AE	AF	AM	C	D	NA
25	14	M10x1.5	12	M10x1.25	16	3/8-24	12	3/8-24	16	1/2-20	18	12	4	8	13	6	12	13
32	18	M12x1.75	15	M12x1.25	18	7/16-20	15	7/16-20	18	9/16-18	25	16	6	10	16	8	15	17
40	22	M16x2	20	M16x1.5	22	5/8-18	20	5/8-18	22	3/4-16	30	20	8	12	20	8	19	21
50	28	M20x2.5	24	M20x1.5	28	3/4-16	24	3/4-16	28	7/8-14	35	24	10	16	25	9	24	27
63	36	M27x3	30	M27x2	36	1-14	30	1-14	36	1 1/4-12	45	28	12	22	33	11	32	35

Rod End Dimensions

Thread Style 4

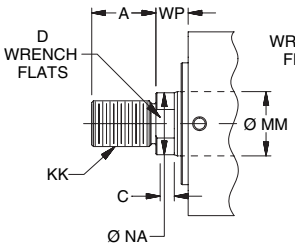

Thread Style 8

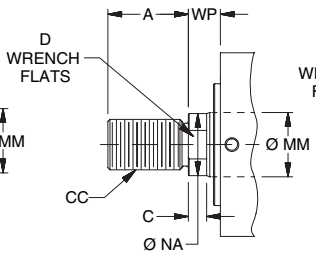

Thread Style 9

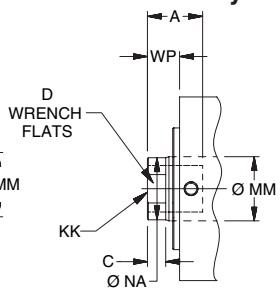

Style 55

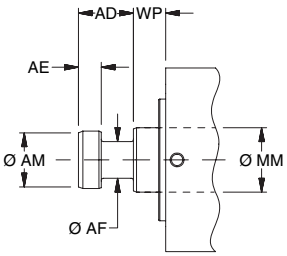

"Special" Thread Style 3

Special thread, extension, rod eye, blank, etc. are also available.

To order, specify "Style 3" and give desired dimensions for KK, A, & WP. If otherwise special furnish dimensional sketch.

www.comoso.com

Parker Hannifin Corporation
Industrial Cylinder Division
Des Plaines, Illinois USA

Style CN Foot Mount with Pilot Gland – Double Rod End – 25mm to 63mm Bore Size

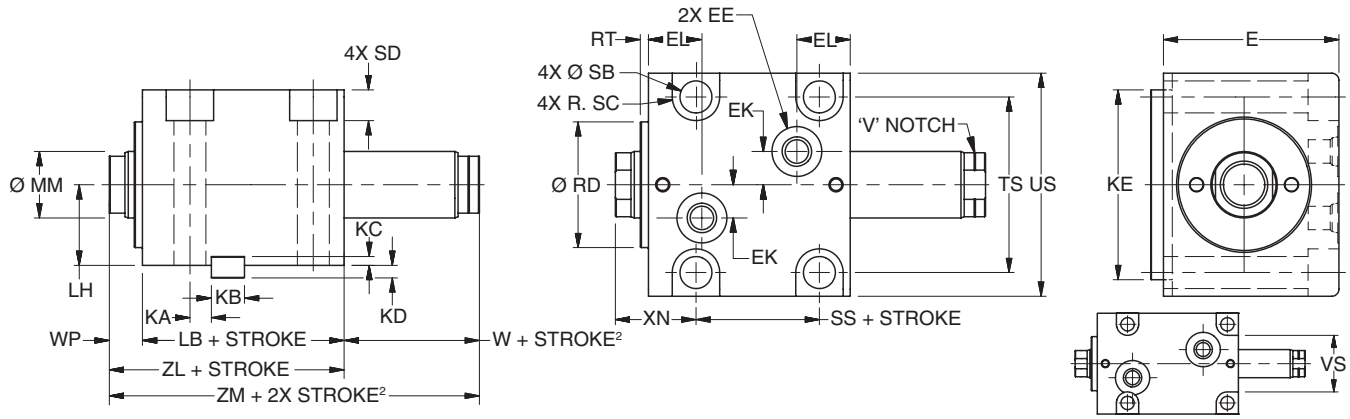

CN Mount Double Rod End – Envelope and Mounting Dimensions

Bore Ø	E	ED Ø	EE				EF	EK	EL	EM	KA	KB	KC	KD	KE
			SAE	NPT	BSP	Mani-fold									
25	45	10	# 2[1]	1/8	G-1/8	3	2	7	17.5	15.8	8.5	8	3.25	3.75	45
32	56	10	# 4	1/4	G-1/4	3	2	11	20.5	18.5	8	12	3.25	4.75	63
40	64	12	# 4	1/4	G-1/4	3	2	12	21	19	8	12	3.25	4.75	70
50	74	15	# 4	1/4	G-1/4	4	2	14	22.5	21	9	14	3.75	5.25	80
63	89	15	# 4	1/4	G-1/4	4	2	17	26	24.5	11	16	4.25	5.75	100

[1] Parker Triple-Lok™ Straight Thread Connector SAE #2 to ¼" 37° flare can be used when this port thread is required. Contact your local Parker Tube Fitting distributor and specify part number 4-2 F5OX.

[2] Minimum 'W + Stroke' on V notch rod side may apply. See minimum rod extension page for details.

25mm & 32mm BOLT HOLE DETAIL

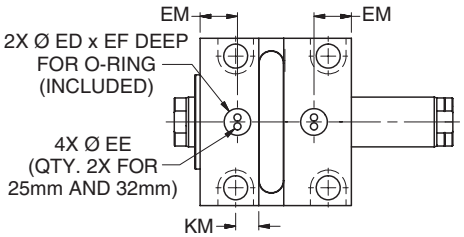

MANIFOLD PORT OPTION DETAIL
CAUTION: KM key slot location is for manifold ports only. Do not use for top mounted ports. KA key slot location is for top mounted ports. Do not use for manifold ports.

CN Mount Double Rod End – Envelope and Mounting Dimensions

Bore Ø	KM	LH	RD Ø f9	RT	SB Ø	SC	SD	TS	US	VS	W²	WP	XN	Add Stroke			Add 2X Stroke	Min. Stroke For M Port
														LB	SS	ZL	ZM²	
25	8.5	20	27	3	6.8	5.5	6.5	39	50	28	8	11	26	45	24.5	56	64	10
32	8	25	36	3	9	7	8.6	56	70	42	10	13	33	51	24	64	74	15
40	8	29	43	3	11	8.75	10.8	62	80	-	10	13	33	55	23	68	78	15
50	13	34	53	3	13.5	10	13	74	94	-	11	14	34	60	27	74	85	20
63	15.5	42	66	3	16	11.5	15.2	90	114	-	13	16	36	67	32	83	96	20

CN Mount Double Rod End – Rod Dimensions

Bore Ø	MM Rod Ø	Rod End														Rod Extension Dimensions		
		Style 9M²		Style 4M		Style 9A²		Style 4A		Style 8A		Style 55M						
		KK	A	KK	A	KK	A	KK	A	CC	A	AD	AE	AF	AM	C	D	NA
25	14	M10x1.5	12	M10x1.25	16	3/8-24	12	3/8-24	16	1/2-20	18	12	4	8	13	6	12	13
32	18	M12x1.75	15	M12x1.25	18	7/16-20	15	7/16-20	18	9/16-18	25	16	6	10	16	8	15	17
40	22	M16x2	20	M16x1.5	22	5/8-18	20	5/8-18	22	3/4-16	30	20	8	12	20	8	19	21
50	28	M20x2.5	24	M20x1.5	28	3/4-16	24	3/4-16	28	7/8-14	35	24	10	16	25	9	24	27
63	36	M27x3	30	M27x2	36	1-14	30	1-14	36	1 1/4-12	45	28	12	22	33	11	32	35

Rod End Dimensions

Thread Style 4

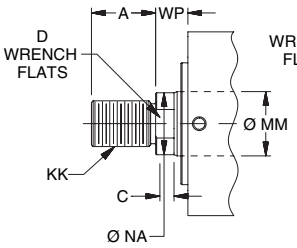

Thread Style 8

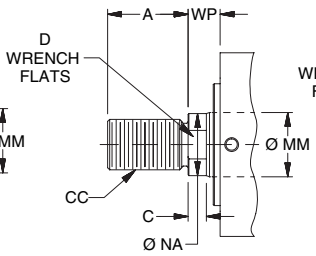

Thread Style 9

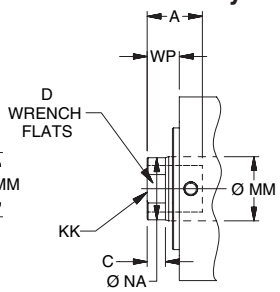

Style 55

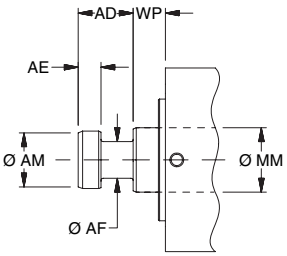

"Special" Thread Style 3

Special thread, extension, rod eye, blank, etc. are also available.

To order, specify "Style 3" and give desired dimensions for KK, A, & WP. If otherwise special furnish dimensional sketch.

www.comoso.com

Parker Hannifin Corporation
Industrial Cylinder Division
Des Plaines, Illinois USA

CHD

EPS-C Threaded Style End-of-Stroke Switch

Optional high pressure inductive switches provide an end-of stroke signal in Series CHD cylinders. Available on both ends or one end only, EPS-C switches are low profile and can be specified on any of the four sides of the cylinder, except Styles C and CN where they are only available at port position #1.

EPS-C Switch Specifications	
Switch Type:	Inductive Proximity
Style:	EPS-C
Code Designator:	J
Description:	General Purpose, 3 wire, DC Sensor
Supply Voltage:	10 to 30 VDC
Load Current, max.:	100 mA
Leak Current:	100 µA
Voltage Drop:	≤ 2.5 V
Operating Temperature:	-13° F to +176°F
Part Number:	0961930000
Connection:	.3m Lead with 8mm Connector
Enclosure Rating:	Enclosure - IP68
Led Indication:	No
Short Circuit Protection:	Yes
Weld Field Immunity:	Yes
Output:	PNP
Approvals/Marks:	CE
Make/Break Location:	0.25" from end of stroke typical. Tolerance is +0 / -0.13"
Wiring Instructions:	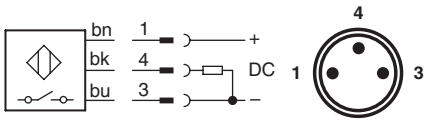

EPS-C limit switches may be ordered as follows:

1) Complete the basic cylinder model number.
2) Place an “S” in the model number for Special Modification.
3) Special modifications to cylinders other than switches must be described in the item notes.
4) Limit Switch Code – Specify letter prefix “J” for EPS-C then fill in the four blanks specifying port location, switch location and actuation point for both head and cap. If only one switch is used, place “XXXX” in the unused blanks.

Example = J13GG-XXXX denotes a switch on the Gland end only.

Example = XXXX-J42GG denotes a switch on the cap end only.

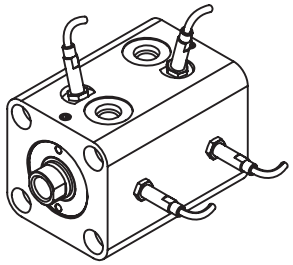

EPS-C Switch Dimensions

Bore Ø	EN	HS
25	17	50.5
32	20	54
40	21	58
50	23.5	63
63	26.5	69.5
80	30	78

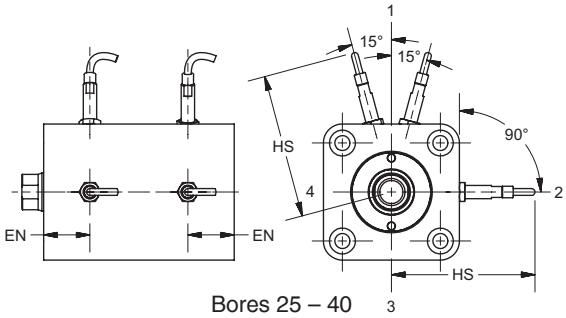

Bores 25 – 40
Positions 1 – 4
(Styles C & CN position 1 only)

Note: Switch installation at 15° angle is only required when specified at position 1 (same position as ports).

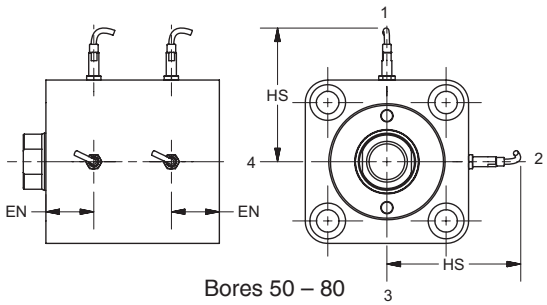

Bores 50 – 80
Positions 1 – 4
(Styles C & CN position 1 only)

8mm Cordset

Cable Length	Threaded Connector	Snap On Connector
5 meters	086620T005	086620S005
2 meters	086620T002	086620S002

Limit Switch Code

Head End				Cap End		
J	**1**[1]	**2**	**GG**	**1**[1]	**2**	**GG**
Specify: J=EPS-C	Port Location	Switch Location	Actuation Point GG= End of Stroke	Port Location	Switch Location	Actuation Point GG= End of Stroke

[1] Ports must always be specified in position 1.

www.comoso.com

Suggested Machining for Mounting Series CHD Styles C & CN Cylinders

The drawings and dimensions can be used as a suggested guide for preparing the mounting interface for a mounting style C or CN cylinder. Take care to note that the keyway location varies between top threaded port and bottom manifold port types. The KA keyway location is for top ports only and should not be used for manifold ports. And, the KM keyway location is for bottom manifold ports and should not be used for top threaded ports. Also the XS rod dimension applies only to the C mount and the XN rod dimension applies only to the CN mount.

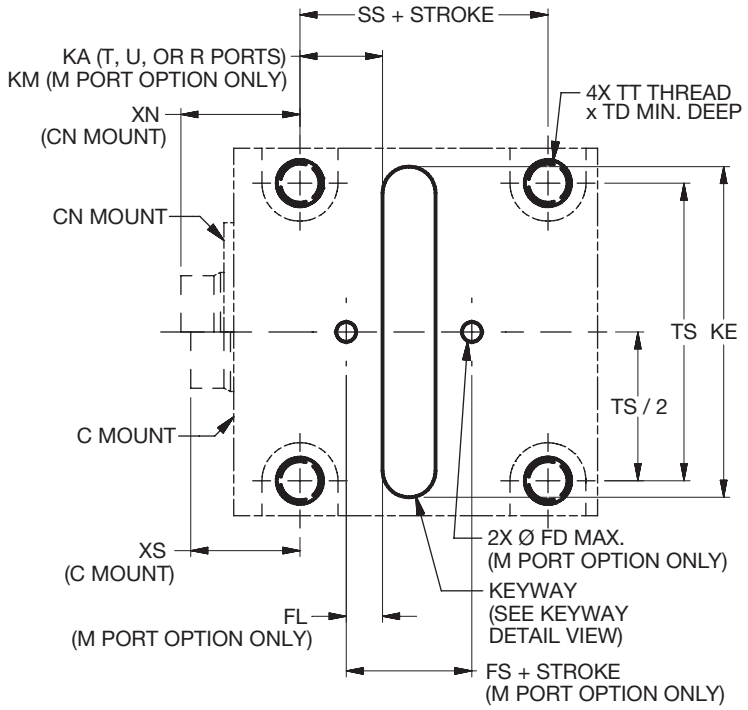

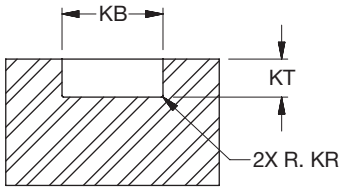

KEYWAY DETAIL

Machining Interface Dimensions

Bore Ø	FD[2]	FL[2]	KA[1]	KB	KE	KM[2]	KR	KT	TD	TS	TT	XN[3]	XS[3]	Add Stroke	
														FS[2]	SS
25	3	7.8	8.5	$8^{-0.043}$	$45^{+0.5}$	8.5	$0.16^{+.09}$	$4^{+0.2}$	14	39	M6x1-6H	26	23	13.5	24.5
32	3	9.5	8	$12^{-0.043}$	$63^{+0.5}$	8	$0.25^{+.15}$	$5^{+0.2}$	16	56	M8x1.25-6H	33	30	14	24
40	5	9	8	$12^{-0.043}$	$70^{+0.5}$	8	$0.25^{+.15}$	$5^{+0.2}$	20	62	M10x1.5-6H	33	30	17	23
50	6	12	9	$14^{-0.043}$	$80^{+0.5}$	13	$0.25^{+.15}$	$5.5^{+0.2}$	22	74	M12x1.75-6H	34	31	18	27
63	6	11	11	$16^{-0.043}$	$100^{+0.5}$	15.5	$0.25^{+.15}$	$6^{+0.2}$	24	90	M14x2-6H	36	33	18	32

[1] KA keyway location is for top ports only - do not use for 'M' manifold port option.
[2] KM keyway location, FD flow hole Ø and FL / FS flow hole locations apply to 'M' manifold port option only.
[3] XS dimension is used for C mount; XN dimension is used for CN mount.

Mounting Hardware

Bore Ø	Nominal Key Dimensions	Mounting SHCS[4]
25	8 x 7 x 45	M6 x 50
32	12 x 8 x 63	M8 x 60
40	12 x 8 x 70	M10 x 70
50	14 x 9 x 80	M12 x 80
63	16 x 10 x 100	M14 x 95

[4] Customer supplied (4x)

www.comoso.com

Minimum Rod Extension

Double rod cylinders with Style 9 on V notch side of cylinder

When a rod end Style 9 is specified on the V notch side of a double rod cylinder, a minimum W + Stroke dimension is required. This bore and stroke dependent value is shown in the following table.

Bore Ø	Minimum W + Stroke	For Strokes Equal-to or Less-than
20	18	10
25	23	15
32	25	15
40	30	20
50	31	20
63	38	25
80	42	25
100	51	25

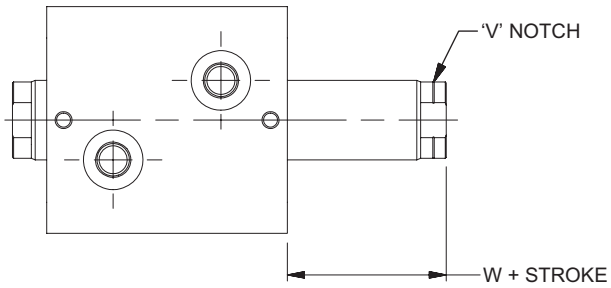

Style 3 (special) rod ends with female thread depth equal to the standard A dimension are also subject to this minimum. For deeper threads, the minimum W + Stroke will increase by the depth increase beyond the standard A dimension. No other rod end styles have this limitation.

www.comoso.com

Cylinder Mounting

Always mount Series CHE & CHD cylinders using high tensile alloy steel socket head screws and torque them to the values shown. In addition to bolts, styles C, CA & CN cylinders should be keyed to the mounting surface with a thrust key, utilizing the groove provided in the cylinder body or mounting bracket. Bolt kits for T, TN, and TR mounts are offered and can be specified by kit part numbers on the next page. Refer to CHE or CHD mounting style pages for bore and mounting availability.

Mounting Bolt Torques

Series	Bore Ø	Metric Mounting Bolts			Inch Mounting Bolts		
		Mount	Size	Torque (N-m)	Mount	Size	Torque (lb-ft)
CHE	20	T, TN, TR	M5x0.8	4.5 - 4.7	T, TN, TR	#10-32	3.2 - 3.4
	25	T, TN, TR	M5x0.8	4.5 - 4.7	T, TN, TR	#10-32	3.2 - 3.4
	32	T, TN, TR	M6x1	7.5 - 7.9	T, TN, TR	1/4-28	5.6 - 5.9
	40	T, TN, TR	M8x1.25	18 - 19	T, TN, TR	5/16-24	13 - 14
	50	T, TN, TR	M10x1.5	35 - 37	T, TN, TR	3/8-24	25 - 26
	63	T, TN, TR	M12x1.75	60 - 63	T, TN, TR	1/2-20	47 - 49
	80	T, TN, TR	M14x2	100 - 105	T, TN, TR	1/2-20[1]	70 - 73
						9/16-18	75 - 79
	100	T, TN, TR	M16x2	150 - 158	T, TN, TR	5/8-18	115 - 120
CHD	20	T, TN, TR M, MN, MR	M5x0.8	6.8 - 7.1	T, TN, TR A, AN, AR	#10-32	4.7 - 4.9
	25	T, TN, TR M, MN, MR	M5x0.8	6.8 - 7.1	T, TN, TR A, AN, AR	#10-32	4.7 - 4.9
	32	T, TN, TR M, MN, MR	M6x1	11 - 12	T, TN, TR A, AN, AR	1/4-28	8.3 - 8.7
	40	T, TN, TR M, MN, MR	M8x1.25	27 - 28	T, TN, TR A, AN, AR	5/16-24	20 - 21
	50	T, TN, TR M, MN, MR	M10x1.5	55 - 58	T, TN, TR A, AN, AR	3/8-24	38 - 40
	63	T, TN, TR M, MN, MR	M12x1.75	90 - 95	T, TN, TR A, AN, AR	1/2-20	70 - 73
	80	T, TN, TR M, MN, MR	M14x2	150 - 158	T, TN, TR	1/2-20[1]	70 - 73
						9/16-18	110 - 115
					A, AN, AR	5/8-18	170 - 178
CHE & CHD	20	J, H	M5x0.8	6.8 - 7.1	J, H	#10-32	4.7 - 4.9
	25	J, H	M5x0.8	6.8 - 7.1	J, H	#10-32	4.7 - 4.9
	32	J, H	M6x1	11 - 12	J, H	1/4-28	8.3 - 8.7
	40	J, H	M10x1.5	55 - 58	J, H	3/8-24	38 - 40
	50	J, H	M12x1.75	90 - 95	J, H	1/2-20	70 - 73
	63	J, H	M14x2	150 - 158	J, H	9/16-18	110 - 115
	80	J, H	M16x2	230 - 240	J, H	5/8-18	170 - 178
	100	J, H	M20x2.5	450 - 475	J, H	3/4-16	315 - 330
CHE & CHD	20	CA	M5x0.8	6.8 - 7.1	CA	#10-32	4.7 - 4.9
	25	C, CN, CA	M6x1	11 - 12	C, CN, CA	1/4-28	8.3 - 8.7
	32	C, CN, CA	M8x1.25	27 - 28	C, CN, CA	5/16-18	20 - 21
	40	C, CN, CA	M10x1.5	55 - 58	C, CN, CA	3/8-18	38 - 40
	50	C, CN, CA	M12x1.75	90 - 95	C, CN, CA	1/2-20	70 - 73
	63	C, CN, CA	M14x2	150 - 158	C, CN, CA	9/16-18	110 - 115
	80	CA	M16x2	230 - 242	CA	5/8-18	170 - 178
	100	CA	M20x2.5	450 - 475	CA	3/4-16	315 - 330

[1] When using ½" socket head cap screws with 80mm T mount, flat washers are required; flat washer OD must be .866" ±.020 (22mm ±0.5).

www.comoso.com

Mounting Bolt Kits for Series CHE & CHD – Styles T, TN & TR

(Kits include four bolts.)

Bore Ø	Bolt Size	Bolt Length	A Thread Length[1]	Kit Part Number
20	M5x0.8	45mm + Stroke	7.4mm	CHEB020[2]
25	M5x0.8	50mm + Stroke	10.4mm	CHEB025[2]
32	M8x1	55mm + Stroke	10.5mm	CHEB032[2]
40	M8x1.25	60mm + Stroke	13.6mm	CHEB040[2]
50	M10x1.5	65mm + Stroke	15.8mm	CHEB050[2]
63	M12x1.75	70mm + Stroke	16.0mm	CHEB063[2]
80	M14x2	85mm + Stroke	22.2mm	CHEB080[2]
100	M16x2	105mm + Stroke	26.5mm	CHEB100[2]

[1] For intermediate stroke lengths the 'A' exposed thread length will be therefore increased by the difference between the actual stroke and the next longer 5mm bolt stroke length increment.

[2] The last three digits of the kit part number are to be supplied as the cylinder stroke in 5mm increments. When specifying a bolt kit for intermediate stroke lengths, use the next longer 5mm stroke increment.

E.g. Kit number for 20mm bore, 35mm stroke – CHEB020035
Kit number for 50mm bore, 72mm stroke – CHEB050075

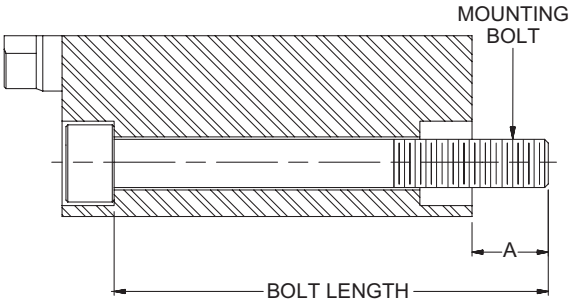

www.comoso.com

Parts Identification Drawing – Standard Piston

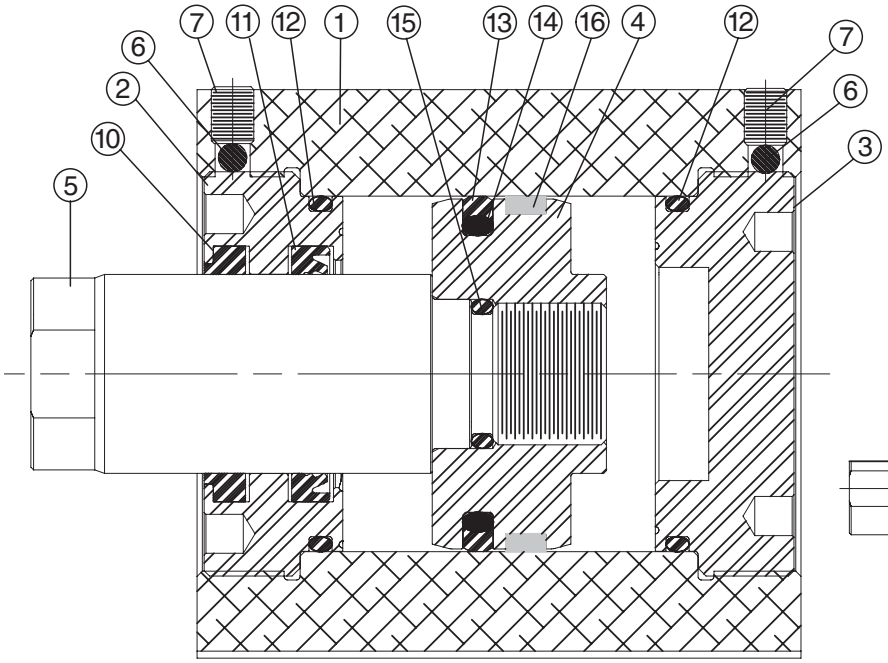

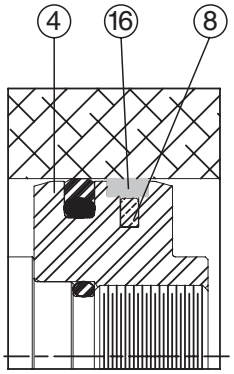

Series CHE
Magnetic Piston Option

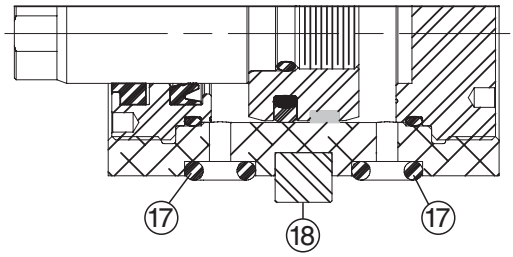

Series CHD - C & CN Mount
Manifold Port Option

Item No.	Description	Material	Item No.	Description	Material	
					Standard	Fluorocarbon
1	Cylinder Body - CHE	Aluminum Alloy (Hard Anodized)	10	Rod Wiper	PUR	Fluorocarbon
			11	Rod Seal	PUR	Fluorocarbon
	Cylinder Body - CHD	Steel	Not Shown	Rod Seal Back-up Washer[2]	Not Required	Virgin PTFE
2	Gland	Nodular Iron or Bronze				
3	Cap	Nodular Iron or Bronze	12	End Seal	PUR	Fluorocarbon
4	Piston – Standard	Nodular Iron	13	Piston Seal	PUR	Filled PTFE
	Piston – with Magnet	Aluminum Alloy	14	PS Energizer	NBR	Fluorocarbon
5	Piston Rod	Carbon Steel (Hard Chrome Plated)	15	Piston-to-Rod o-ring	PUR	Fluorocarbon
6	Ball	Nylon	16	Piston Wear Band	Glass-reinforced nylon	Glass-reinforced nylon
7	Set Screw	Alloy Steel	17	Manifold Port Seal	PUR	Fluorocarbon
8	Magnet	Sintered NdFeB[1]	18	C & CN Mount Key	Steel	

[1] Neodymium Iron Boron
[2] 32-100mm bores only

www.comoso.com

Seal Kits For Series CHE & CHD

See Standard Specifications Page for fluid and temperature compatibility. Cylinder gland and cap are threaded into the cylinder body. To service rod seal, rod wiper, piston seal, or end seals the gland or cap must be removed. Spanner holes in the gland and cap are available for the purpose of removing and installing these components. Be sure to torque the gland or cap to the specifications below and replace the nylon ball and set screw to further lock them in place. Refer to CHE & CHD mounting style pages for Bore and Rod Diameter availability.

Rod Gland and Rod Seal Kits for Series CHE & CHD

Rod Ø	Rod Gland (w/o pilot[1]) Kits		Rod Seal Kits	
	Class 1	Class 5	Class 1	Class 5
	Consists of 1 ea. of items #2, 6, 10, 11[2], & 12		Consists of 1 ea. of items #6, 10, 11[2], & 12	
12	RGCHE01201	RGCHE01205	RKCHE01201	RKCHE01205
14	RGCHE01401	RGCHE01405	RKCHE01401	RKCHE01405
18	RGCHE01801	RGCHE01805	RKCHE01801	RKCHE01805
22	RGCHE02201	RGCHE02205	RKCHE02201	RKCHE02205
28	RGCHE02801	RGCHE02805	RKCHE02801	RKCHE02805
36	RGCHE03601	RGCHE03605	RKCHE03601	RKCHE03605
45	RGCHE04501	RGCHE04505	RKCHE04501	RKCHE04505
56	RGCHE05601	RGCHE05605	RKCHE05601	RKCHE05605

[1] Pilot gland is required for AN, CA, CN, J, MN and TN mounting styles. For Gland Kit with pilot change 'CHE0' in kit number to 'CHEP'. E.g. RGCHEP1201.

Complete Seal Kits for Series CHE & CHD

Bore Ø	Class 1	Class 5	Gland & Cap Torque Specifications			
	Consists of 1 ea. of items #10, 11[2], 13, 14, 16 & 2 ea. of items #6 & 12		Series CHE		Series CHD	
20	SKCHE02001	SKCHE02005	17 - 18 N-m	155 - 162 lb-in	27 - 28 N-m	20 - 21 lb-ft
25	SKCHE02501	SKCHE02505	31 - 32 N-m	23 - 24 lb-ft	47 - 49 N-m	35 - 36 lb-ft
32	SKCHE03201	SKCHE03205	68 - 71 N-m	50 - 52 lb-ft	98 - 102 N-m	72 - 75 lb-ft
40	SKCHE04001	SKCHE04005	129 - 135 N-m	95 - 99 lb-ft	169 - 177 N-m	125 - 131 lb-ft
50	SKCHE05001	SKCHE05005	203 - 213 N-m	150 - 157 lb-ft	285 - 299 N-m	210 - 220 lb-ft
63	SKCHE06301	SKCHE06305	305 - 320 N-m	225 - 236 lb-ft	488 - 512 N-m	360 - 378 lb-ft
80	SKCHE08001	SKCHE08005	576 - 604 N-m	425 - 446 lb-ft	881 - 925 N-m	650 - 682 lb-ft
100	SKCHE10001	SKCHE10005	881 - 925 N-m	650 - 682 lb-ft	–	–

[2] Class 5 kits for 32-100mm bores and 18-56mm rods include a PTFE Back-up washer for the rod seal.

Spanner Hole Dimensions

Gland & Cap Spanners

Bore Ø	CC	DD	FF Ø	TH	TP
20	2.25	2.25	22	–	–
25	3.25	3.25	25	–	–
32	4.25	4.25	30	M3x0.5 - 6H	6
40	5.25	5.25	35	M4x0.7 - 6H	7
50	6.38	6.25	45	M5x0.8 - 6H	7
63	8.38	8.25	55	M6x1 - 6H	8
80	10.50	10.50	70	M8x1.25 - 6H	9
100	10.50	10.50	85	M8x1.25 - 6H	9

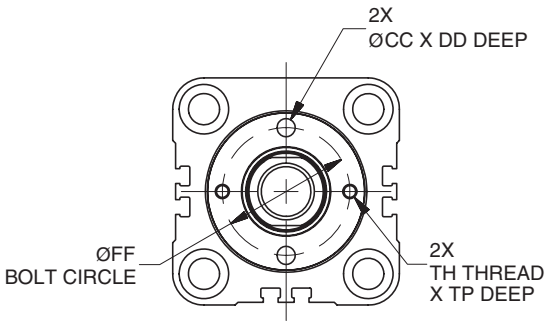

www.comoso.com

Safety Guide for Selecting and Using Hydraulic, Pneumatic Cylinders and Their Accessories

WARNING: ⚠ FAILURE OF THE CYLINDER, ITS PARTS, ITS MOUNTING, ITS CONNECTIONS TO OTHER OBJECTS, OR ITS CONTROLS CAN RESULT IN:

- **Unanticipated or uncontrolled movement of the cylinder or objects connected to it.**
- **Falling of the cylinder or objects held up by it.**
- **Fluid escaping from the cylinder, potentially at high velocity.**

THESE EVENTS COULD CAUSE DEATH OR PERSONAL INJURY BY, FOR EXAMPLE, PERSONS FALLING FROM HIGH LOCATIONS, BEING CRUSHED OR STRUCK BY HEAVY OR FAST MOVING OBJECTS, BEING PUSHED INTO DANGEROUS EQUIPMENT OR SITUATIONS, OR SLIPPING ON ESCAPED FLUID.

Before selecting or using Parker Hannifin Corporation (the Company) cylinders or related accessories, it is important that you read, understand and follow the following safety information. Training is advised before selecting and using the Company's products.

1.0 General Instructions

1.1 Scope – This safety guide provides instructions for selecting and using (including assembling, installing, and maintaining) cylinder products. This safety guide is a supplement to and is to be used with the specific Company publications for the specific cylinder products that are being considered for use.

1.2 Fail Safe – Cylinder products can and do fail without warning for many reasons. All systems and equipment should be designed in a fail-safe mode so that if the failure of a cylinder product occurs people and property won't be endangered.

1.3 Distribution – Provide a free copy of this safety guide to each person responsible for selecting or using cylinder products. Do not select or use the Company's cylinders without thoroughly reading and understanding this safety guide as well as the specific Company publications for the products considered or selected.

1.4 User Responsibility – Due to very wide variety of cylinder applications and cylinder operating conditions, the Company does not warrant that any particular cylinder is suitable for any specific application. This safety guide does not analyze all technical parameters that must be considered in selecting a product. The hydraulic and pneumatic cylinders outlined in this catalog are designed to the Company's design guidelines and do not necessarily meet the design guideline of other agencies such as American Bureau of Shipping, ASME Pressure Vessel Code etc. The user, through its own analysis and testing, is solely responsible for:

- Making the final selection of the cylinders and related accessories.
- Determining if the cylinders are required to meet specific design requirements as required by the Agency(s) or industry standards covering the design of the user's equipment.
- Assuring that the user's requirements are met, OSHA requirements are met, and safety guidelines from the applicable agencies such as but not limited to ANSI are followed and that the use presents no health or safety hazards.
- Providing all appropriate health and safety warnings on the equipment on which the cylinders are used.

1.5 Additional Questions – Call the appropriate Company technical service department if you have any questions or require any additional information. See the Company publication for the product being considered or used, or call 1-847-298-2400, or go to www.parker.com, for telephone numbers of the appropriate technical service department.

2.0 Cylinder and Accessories Selection

2.1 Seals – Part of the process of selecting a cylinder is the selection of seal compounds. Before making this selection, consult the "seal information page(s)" of the publication for the series of cylinders of interest.

The application of cylinders may allow fluids such as cutting fluids, wash down fluids etc. to come in contact with the external area of the cylinder. These fluids may attack the piston rod wiper and or the primary seal and must be taken into account when selecting and specifying seal compounds.

Dynamic seals will wear. The rate of wear will depend on many operating factors. Wear can be rapid if a cylinder is mis-aligned or if the cylinder has been improperly serviced. The user must take seal wear into consideration in the application of cylinders.

2.2 Piston Rods – Possible consequences of piston rod failure or separation of the piston rod from the piston include, but are not limited to are:

- Piston rod and or attached load thrown off at high speed.
- High velocity fluid discharge.
- Piston rod extending when pressure is applied in the piston retract mode.

Piston rods or machine members attached to the piston rod may move suddenly and without warning as a consequence of other conditions occurring to the machine such as, but not limited to:

- Unexpected detachment of the machine member from the piston rod.
- Failure of the pressurized fluid delivery system (hoses, fittings, valves, pumps, compressors) which maintain cylinder position.
- Catastrophic cylinder seal failure leading to sudden loss of pressurized fluid.
- Failure of the machine control system.

Follow the recommendations of the "Piston Rod Selection Chart and Data" in the publication for the series of cylinders of interest. The suggested piston rod diameter in these charts must be followed in order to avoid piston rod buckling.

Piston rods are not normally designed to absorb bending moments or loads which are perpendicular to the axis of piston rod motion. These additional loads can cause the piston rod to fail. If these types of additional loads are expected to be imposed on the piston rod, their magnitude should be made known to our engineering department.

The cylinder user should always make sure that the piston rod is securely attached to the machine member.

On occasion cylinders are ordered with double rods (a piston rod extended from both ends of the cylinder). In some cases a stop is threaded on to one of the piston rods and used as an external stroke adjuster. On occasions spacers are attached to the machine member connected to the piston rod and also used as a stroke adjuster. In both cases the stops will create a pinch point and the user should consider appropriate use of guards. If these external stops are not perpendicular to the mating contact surface, or if debris is trapped between the contact surfaces, a bending moment will be placed on the piston rod, which can lead to piston rod failure. An external stop will also negate the effect of cushioning and will subject the piston rod to impact loading. Those two (2) conditions can cause piston rod failure. Internal stroke adjusters are available with and without cushions. The use of external stroke adjusters should be reviewed with our engineering department.

The piston rod to piston and the stud to piston rod threaded connections are secured with an anaerobic adhesive. The strength of the adhesive decreases with increasing temperature. Cylinders which can be exposed to temperatures above +250°F (+121°C) are to be ordered with a non studded piston rod and a pinned piston to rod joint.

2.3 Cushions – Cushions should be considered for cylinder applications when the piston velocity is expected to be over 4 inches/second.

Cylinder cushions are normally designed to absorb the energy of a linear applied load. A rotating mass has considerably more energy than the same mass moving in a linear mode. Cushioning for a rotating mass application should be reviewed by our engineering department.

2.4 Cylinder Mountings – Some cylinder mounting configurations may have certain limitations such as but not limited to minimum stroke for side or foot mounting cylinders or pressure de-ratings for certain mounts. Carefully review the catalog for these types of restrictions.

Always mount cylinders using the largest possible high tensile alloy steel socket head cap screws that can fit in the cylinder mounting holes and torque them to the manufacturer's recommendations for their size.

2.5 Port Fittings – Hydraulic cylinders applied with meter out or deceleration circuits are subject to intensified pressure at piston rod end.

The rod end pressure is approximately equal to:

$$\frac{\text{operating pressure x effective cap end area}}{\text{effective rod end piston area}}$$

Contact your connector supplier for the pressure rating of individual connectors.

3.0 Cylinder and Accessories Installation and Mounting

3.1 Installation

3.1.1 – Cleanliness is an important consideration, and cylinders are shipped with the ports plugged to protect them from contaminants entering the ports. These plugs should not be removed until the piping is to be installed. Before making the connection to the cylinder ports, piping should be thoroughly cleaned to remove all chips or burrs which might have resulted from threading or flaring operations.

www.comoso.com

3.1.2 – Cylinders operating in an environment where air drying materials are present such as fast-drying chemicals, paint, or weld splatter, or other hazardous conditions such as excessive heat, should have shields installed to prevent damage to the piston rod and piston rod seals.

3.1.3 – Proper alignment of the cylinder piston rod and its mating component on the machine should be checked in both the extended and retracted positions. Improper alignment will result in excessive rod gland and/or cylinder bore wear. On fixed mounting cylinders attaching the piston rod while the rod is retracted will help in achieving proper alignment.

3.1.4 – Sometimes it may be necessary to rotate the piston rod in order to thread the piston rod into the machine member. This operation must always be done with zero pressure being applied to either side of the piston. Failure to follow this procedure may result in loosening the piston to rod-threaded connection. In some rare cases the turning of the piston rod may rotate a threaded piston rod gland and loosen it from the cylinder head. Confirm that this condition is not occurring. If it does, re-tighten the piston rod gland firmly against the cylinder head.

For double rod cylinders it is also important that when attaching or detaching the piston rod from the machine member that the torque be applied to the piston rod end of the cylinder that is directly attaching to the machine member with the opposite end unrestrained. If the design of the machine is such that only the rod end of the cylinder opposite to where the rod attaches to the machine member can be rotated, consult the factory for further instructions.

3.2 Mounting Recommendations

3.2.1 – Always mount cylinders using the largest possible high tensile alloy steel socket head screws that can fit in the cylinder mounting holes and torque them to the manufacturer's recommendations for their size.

3.2.2 – Side-Mounted Cylinders – In addition to the mounting bolts, cylinders of this type should be equipped with thrust keys or dowel pins located so as to resist the major load.

3.2.3 – Tie Rod Mounting – Cylinders with tie rod mountings are recommended for applications where mounting space is limited. The standard tie rod extension is shown as BB in dimension tables. Longer or shorter extensions can be supplied. Nuts used for this mounting style should be torqued to the same value as the tie rods for that bore size.

3.2.4 – Flange Mount Cylinders – The controlled diameter of the rod gland extension on head end flange mount cylinders can be used as a pilot to locate the cylinders in relation to the machine. After alignment has been obtained, the flanges may be drilled for pins or dowels to prevent shifting.

3.2.5 – Trunnion Mountings – Cylinders require lubricated bearing blocks with minimum bearing clearances. Bearing blocks should be carefully aligned and rigidly mounted so the trunnions will not be subjected to bending moments. The rod end should also be pivoted with the pivot pin in line and parallel to axis of the trunnion pins.

3.2.6 – Clevis Mountings – Cylinders should be pivoted at both ends with centerline of pins parallel to each other. After cylinder is mounted, be sure to check to assure that the cylinder is free to swing through its working arc without interference from other machine parts.

4.0 Cylinder and Accessories Maintenance, Troubleshooting and Replacement

4.1 Storage – At times cylinders are delivered before a customer is ready to install them and must be stored for a period of time. When storage is required the following procedures are recommended.

4.1.1 – Store the cylinders in an indoor area which has a dry, clean and noncorrosive atmosphere. Take care to protect the cylinder from both internal corrosion and external damage.

4.1.2 – Whenever possible cylinders should be stored in a vertical position (piston rod up). This will minimize corrosion due to possible condensation which could occur inside the cylinder. This will also minimize seal damage.

4.1.3 – Port protector plugs should be left in the cylinder until the time of installation.

4.1.4 – If a cylinder is stored full of hydraulic fluid, expansion of the fluid due to temperature changes must be considered. Installing a check valve with free flow out of the cylinder is one method.

4.1.5 – When cylinders are mounted on equipment that is stored outside for extended periods, exposed unpainted surfaces, e.g. piston rod, must be coated with a rust-inhibiting compound to prevent corrosion.

4.2 Cylinder Trouble Shooting

4.2.1 – **External Leakage**

4.2.1.1 – Rod seal leakage can generally be traced to worn or damaged seals. Examine the piston rod for dents, gouges or score marks, and replace piston rod if surface is rough.

Rod seal leakage could also be traced to gland wear. If clearance is excessive, replace rod bushing and seal. Rod seal leakage can also be traced to seal deterioration. If seals are soft or gummy or brittle, check compatibility of seal material with lubricant used if air cylinder, or operating fluid if hydraulic cylinder. Replace with seal material, which is compatible with these fluids. If the seals are hard or have lost elasticity, it is usually due to exposure to temperatures in excess of 165°F. (+74°C). Shield the cylinder from the heat source to limit temperature to 350°F. (+177°C.) and replace with fluorocarbon seals.

4.2.1.2 – Cylinder body seal leak can generally be traced to loose tie rods. Torque the tie rods to manufacturer's recommendation for that bore size.

Excessive pressure can also result in cylinder body seal leak. Determine maximum pressure to rated limits. Replace seals and retorque tie rods as in paragraph above. Excessive pressure can also result in cylinder body seal leak. Determine if the pressure rating of the cylinder has been exceeded. If so, bring the operating pressure down to the rating of the cylinder and have the tie rods replaced.

Pinched or extruded cylinder body seal will also result in a leak. Replace cylinder body seal and retorque as in paragraph above.

Cylinder body seal leakage due to loss of radial squeeze which shows up in the form of flat spots or due to wear on the O.D. or I.D. – Either of these are symptoms of normal wear due to high cycle rate or length of service. Replace seals as per paragraph above.

4.2.2 – **Internal Leakage**

4.2.2.1 – Piston seal leak (by-pass) 1 to 3 cubic inches per minute leakage is considered normal for piston ring construction. Virtually no static leak with lipseal type seals on piston should be expected. Piston seal wear is a usual cause of piston seal leakage. Replace seals as required.

4.2.2.2 – With lipseal type piston seals excessive back pressure due to over-adjustment of speed control valves could be a direct cause of rapid seal wear. Contamination in a hydraulic system can result in a scored cylinder bore, resulting in rapid seal wear. In either case, replace piston seals as required.

4.2.2.3 – What appears to be piston seal leak, evidenced by the fact that the cylinder drifts, is not always traceable to the piston. To make sure, it is suggested that one side of the cylinder piston be pressurized and the fluid line at the opposite port be disconnected. Observe leakage. If none is evident, seek the cause of cylinder drift in other component parts in the circuit.

4.2.3 – **Cylinder Fails to Move the Load**

4.2.3.1 – Pneumatic or hydraulic pressure is too low. Check the pressure at the cylinder to make sure it is to circuit requirements.

4.2.3.2 – Piston Seal Leak – Operate the valve to cycle the cylinder and observe fluid flow at valve exhaust ports at end of cylinder stroke. Replace piston seals if flow is excessive.

4.2.3.3 – Cylinder is undersized for the load – Replace cylinder with one of a larger bore size.

4.3 Erratic or Chatter Operation

4.3.1 – Excessive friction at rod gland or piston bearing due to load misalignment – Correct cylinder-to-load alignment.

4.3.2 – Cylinder sized too close to load requirements – Reduce load or install larger cylinder.

4.3.3 – Erratic operation could be traced to the difference between static and kinetic friction. Install speed control valves to provide a back pressure to control the stroke.

4.4 Cylinder Modifications, Repairs, or Failed Component – Cylinders as shipped from the factory are not to be disassembled and or modified. If cylinders require modifications, these modifications must be done at company locations or by the Company's certified facilities. The Industrial Cylinder Division Engineering Department must be notified in the event of a mechanical fracture or permanent deformation of any cylinder component (excluding seals). This includes a broken piston rod, tie rod, mounting accessory or any other cylinder component. The notification should include all operation and application details. This information will be used to provide an engineered repair that will prevent recurrence of the failure.

It is allowed to disassemble cylinders for the purpose of replacing seals or seal assemblies. However, this work must be done by strictly following all the instructions provided with the seal kits.

www.comoso.com

Manufacturing Locations

Regional Plants

California
221 Helicopter Circle
Corona, CA 92880
Tel.: (951) 280-3800
Fax: (951) 280-3808
Fax: (800) 869-9886

Connecticut
80 Shaker Road
Enfield, CT 06082
Tel.: (860) 749-2215
Fax: (800) 323-0105

Georgia
1300 Six Flags Road
Lithia Springs, GA 30122
Tel.: (770) 819-3400
Fax: (800) 437-3498

Indiana
Goodland Plant
715 South Iroquois Street
Goodland, IN 47948
Tel.: (219) 297-3182
Fax: (800) 328-8120

Michigan
900 Plymouth Road
Plymouth, MI 48170
Tel.: (734) 455-1700
Fax: (734) 455-1007

Oregon
29289 Airport Road
Eugene, OR 97402-0079
Tel.: (541) 689-9111
Fax: (541) 688-6771
Fax: (800) 624-7996

www.comoso.com

Offer of Sale

The items described in this document and other documents and descriptions provided by Parker Hannifin Corporation, its subsidiaries and its authorized distributors ("Seller") are hereby offered for sale at prices to be established by Seller. This offer and its acceptance by any customer ("Buyer") shall be governed by all of the following Terms and Conditions. Buyer's order for any item described in its document, when communicated to Seller verbally, or in writing, shall constitute acceptance of this offer. All goods, services or work described will be referred to as "Products".

1. Terms and Conditions. Seller's willingness to offer Products, or accept an order for Products, to or from Buyer is subject to these Terms and Conditions or any newer version of the terms and conditions found on-line at www.parker.com/saleterms/. Seller objects to any contrary or additional terms or conditions of Buyer's order or any other document issued by Buyer.

2. Price Adjustments; Payments. Prices stated on Seller's quote or other documentation offered by Seller are valid for 30 days, and do not include any sales, use, or other taxes unless specifically stated. Unless otherwise specified by Seller, all prices are F.C.A. Seller's facility (INCOTERMS 2010). Payment is subject to credit approval and is due 30 days from the date of invoice or such other term as required by Seller's Credit Department, after which Buyer shall pay interest on any unpaid invoices at the rate of 1.5% per month or the maximum allowable rate under applicable law.

3. Delivery Dates; Title and Risk; Shipment. All delivery dates are approximate and Seller shall not be responsible for any damages resulting from any delay. Regardless of the manner of shipment, title to any products and risk of loss or damage shall pass to Buyer upon placement of the products with the shipment carrier at Seller's facility. Unless otherwise stated, Seller may exercise its judgment in choosing the carrier and means of delivery. No deferment of shipment at Buyers' request beyond the respective dates indicated will be made except on terms that will indemnify, defend and hold Seller harmless against all loss and additional expense. Buyer shall be responsible for any additional shipping charges incurred by Seller due to Buyer's acts or omissions.

4. Warranty. Seller warrants that the Products sold hereunder shall be free from defects in material or workmanship for a period of eighteen months from the date of delivery to Buyer. The prices charged for Seller's products are based upon the exclusive limited warranty stated above, and upon the following disclaimer: **DISCLAIMER OF WARRANTY: THIS WARRANTY COMPRISES THE SOLE AND ENTIRE WARRANTY PERTAINING TO PRODUCTS PROVIDED HEREUNDER. SELLER DISCLAIMS ALL OTHER WARRANTIES, EXPRESS AND IMPLIED, INCLUDING DESIGN, MERCHANTABILITY AND FITNESS FOR A PARTICULAR PURPOSE.**

5. Claims; Commencement of Actions. Buyer shall promptly inspect all Products upon delivery. No claims for shortages will be allowed unless reported to the Seller within 10 days of delivery. No other claims against Seller will be allowed unless asserted in writing within 30 days after delivery. Buyer shall notify Seller of any alleged breach of warranty within 30 days after the date the defect is or should have been discovered by Buyer. Any action based upon breach of this agreement or upon any other claim arising out of this sale (other than an action by Seller for an amount due on any invoice) must be commenced within 12 months from the date of the breach without regard to the date breach is discovered.

6. LIMITATION OF LIABILITY. UPON NOTIFICATION, SELLER WILL, AT ITS OPTION, REPAIR OR REPLACE A DEFECTIVE PRODUCT, OR REFUND THE PURCHASE PRICE. **IN NO EVENT SHALL SELLER BE LIABLE TO BUYER FOR ANY SPECIAL, INDIRECT, INCIDENTAL OR CONSEQUENTIAL DAMAGES ARISING OUT OF, OR AS THE RESULT OF, THE SALE, DELIVERY, NON-DELIVERY, SERVICING, USE OR LOSS OF USE OF THE PRODUCTS OR ANY PART THEREOF, OR FOR ANY CHARGES OR EXPENSES OF ANY NATURE INCURRED WITHOUT SELLER'S WRITTEN CONSENT, EVEN IF SELLER HAS BEEN NEGLIGENT, WHETHER IN CONTRACT, TORT OR OTHER LEGAL THEORY. IN NO EVENT SHALL SELLER'S LIABILITY UNDER ANY CLAIM MADE BY BUYER EXCEED THE PURCHASE PRICE OF THE PRODUCTS.**

7. User Responsibility. The user, through its own analysis and testing, is solely responsible for making the final selection of the system and Product and assuring that all performance, endurance, maintenance, safety and warning requirements of the application are met. The user must analyze all aspects of the application and follow applicable industry standards and Product information. If Seller provides Product or system options, the user is responsible for determining that such data and specifications are suitable and sufficient for all applications and reasonably foreseeable uses of the Products or systems.

8. Loss to Buyer's Property. Any designs, tools, patterns, materials, drawings, confidential information or equipment furnished by Buyer or any other items which become Buyer's property, will be considered obsolete and may be destroyed by Seller after two consecutive years have elapsed without Buyer ordering the items manufactured using such property. Seller shall not be responsible for any loss or damage to such property while it is in Seller's possession or control.

9. Special Tooling. A tooling charge may be imposed for any special tooling, including without limitation, dies, fixtures, molds and patterns, acquired to manufacture Products. Such special tooling shall be and remain Seller's property notwithstanding payment of any charges by Buyer. In no event will Buyer acquire any interest in apparatus belonging to Seller which is utilized in the manufacture of the Products, even if such apparatus has been specially converted or adapted for such manufacture and notwithstanding any charges paid by Buyer. Unless otherwise agreed, Seller shall have the right to alter, discard or otherwise dispose of any special tooling or other property in its sole discretion at any time.

10. Buyer's Obligation; Rights of Seller. To secure payment of all sums due or otherwise, Seller shall retain a security interest in the goods delivered and this agreement shall be deemed a Security Agreement under the Uniform Commercial Code. Buyer authorizes Seller as its attorney to execute and file on Buyer's behalf all documents Seller deems necessary to perfect its security interest.

11. Improper use and Indemnity. Buyer shall indemnify, defend, and hold Seller harmless from any claim, liability, damages, lawsuits, and costs (including attorney fees), whether for personal injury, property damage, patent, trademark or copyright infringement or any other claim, brought by or incurred by Buyer, Buyer's employees, or any other person, arising out of: (a) improper selection, improper application or other misuse of Products purchased by Buyer from Seller; (b) any act or omission, negligent or otherwise, of Buyer; (c) Seller's use of patterns, plans, drawings, or specifications furnished by Buyer to manufacture Product; or (d) Buyer's failure to comply with these terms and conditions. Seller shall not indemnify Buyer under any circumstance except as otherwise provided.

12. Cancellations and Changes. Orders shall not be subject to cancellation or change by Buyer for any reason, except with Seller's written consent and upon terms that will indemnify, defend and hold Seller harmless against all direct, incidental and consequential loss or damage. Seller may change product features, specifications, designs and availability with notice to Buyer.

13. Limitation on Assignment. Buyer may not assign its rights or obligations under this agreement without the prior written consent of Seller.

14. Force Majeure. Seller does not assume the risk and shall not be liable for delay or failure to perform any of Seller's obligations by reason of circumstances beyond the reasonable control of Seller (hereinafter "Events of Force Majeure"). Events of Force Majeure shall include without limitation: accidents, strikes or labor disputes, acts of any government or government agency, acts of nature, delays or failures in delivery from carriers or suppliers, shortages of materials, or any other cause beyond Seller's reasonable control.

15. Waiver and Severability. Failure to enforce any provision of this agreement will not waive that provision nor will any such failure prejudice Seller's right to enforce that provision in the future. Invalidation of any provision of this agreement by legislation or other rule of law shall not invalidate any other provision herein. The remaining provisions of this agreement will remain in full force and effect.

16. Termination. Seller may terminate this agreement for any reason and at any time by giving Buyer thirty (30) days written notice of termination. Seller may immediately terminate this agreement, in writing, if Buyer: (a) commits a breach of any provision of this agreement (b) appointments a trustee, receiver or custodian for all or any part of Buyer's property (c) files a petition for relief in bankruptcy on its own behalf, or by a third party (d) makes an assignment for the benefit of creditors, or (e) dissolves or liquidates all or a majority of its assets.

17. Governing Law. This agreement and the sale and delivery of all Products hereunder shall be deemed to have taken place in and shall be governed and construed in accordance with the laws of the State of Ohio, as applicable to contracts executed and wholly performed therein and without regard to conflicts of laws principles. Buyer irrevocably agrees and consents to the exclusive jurisdiction and venue of the courts of Cuyahoga County, Ohio with respect to any dispute, controversy or claim arising out of or relating to this agreement.

18. Indemnity for Infringement of Intellectual Property Rights. Seller shall have no liability for infringement of any patents, trademarks, copyrights, trade dress, trade secrets or similar rights except as provided in this Section. Seller will defend and indemnify Buyer against allegations of infringement of U.S. patents, U.S. trademarks, copyrights, trade dress and trade secrets ("Intellectual Property Rights"). Seller will defend at its expense and will pay the cost of any settlement or damages awarded in an action brought against Buyer based on an allegation that a Product sold pursuant to this Agreement infringes the Intellectual Property Rights of a third party. Seller's obligation to defend and indemnify Buyer is contingent on Buyer notifying Seller within ten (10) days after Buyer becomes aware of such allegations of infringement, and Seller having sole control over the defense of any allegations or actions including all negotiations for settlement or compromise. If a Product is subject to a claim that it infringes the Intellectual Property Rights of a third party, Seller may, at its sole expense and option, procure for Buyer the right to continue using the Product, replace or modify the Product so as to make it noninfringing, or offer to accept return of the Product and return the purchase price less a reasonable allowance for depreciation. Notwithstanding the foregoing, Seller shall have no liability for claims of infringement based on information provided by Buyer, or directed to Products delivered hereunder for which the designs are specified in whole or part by Buyer, or infringements resulting from the modification, combination or use in a system of any Product sold hereunder. The foregoing provisions of this Section shall constitute Seller's sole and exclusive liability and Buyer's sole and exclusive remedy for infringement of Intellectual Property Rights.

19. Entire Agreement. This agreement contains the entire agreement between the Buyer and Seller and constitutes the final, complete and exclusive expression of the terms of sale. All prior or contemporaneous written or oral agreements or negotiations with respect to the subject matter are herein merged.

20. Compliance with Law, U. K. Bribery Act and U.S. Foreign Corrupt Practices Act. Buyer agrees to comply with all applicable laws and regulations, including both those of the United Kingdom and the United States of America, and of the country or countries of the Territory in which Buyer may operate, including without limitation the U. K. Bribery Act, the U.S. Foreign Corrupt Practices Act ("FCPA") and the U.S. Anti-Kickback Act (the "Anti-Kickback Act"), and agrees to indemnify and hold harmless Seller from the consequences of any violation of such provisions by Buyer, its employees or agents. Buyer acknowledges that they are familiar with the provisions of the U. K. Bribery Act, the FCPA and the Anti-Kickback Act, and certifies that Buyer will adhere to the requirements thereof. In particular, Buyer represents and agrees that Buyer shall not make any payment or give anything of value, directly or indirectly to any governmental official, any foreign political party or official thereof, any candidate for foreign political office, or any commercial entity or person, for the purpose of influencing such person to purchase products or otherwise benefit the business of Seller.

www.comoso.com

Parker's Motion & Control Technologies

At Parker, we're guided by a relentless drive to help our customers become more productive and achieve higher levels of profitability by engineering the best systems for their requirements. It means looking at customer applications from many angles to find new ways to create value. Whatever the motion and control technology need, Parker has the experience, breadth of product and global reach to consistently deliver. No company knows more about motion and control technology than Parker. For further info call 1 800 C-Parker (1 800 272 7537).

AEROSPACE

Key Markets
- Aircraft engines
- Business & general aviation
- Commercial transports
- Land-based weapons systems
- Military aircraft
- Missiles & launch vehicles
- Regional transports
- Unmanned aerial vehicles

Key Products
- Flight control systems & components
- Fluid conveyance systems
- Fluid metering delivery & atomization devices
- Fuel systems & components
- Hydraulic systems & components
- Inert nitrogen generating systems
- Pneumatic systems & components
- Wheels & brakes

CLIMATE CONTROL

Key Markets
- Agriculture
- Air conditioning
- Food, beverage & dairy
- Life sciences & medical
- Precision cooling
- Processing
- Transportation

Key Products
- CO^2 controls
- Electronic controllers
- Filter driers
- Hand shut-off valves
- Hose & fittings
- Pressure regulating valves
- Refrigerant distributors
- Safety relief valves
- Solenoid valves
- Thermostatic expansion valves

ELECTROMECHANICAL

Key Markets
- Aerospace
- Factory automation
- Food & beverage
- Life science & medical
- Machine tools
- Packaging machinery
- Paper machinery
- Plastics machinery & converting
- Primary metals
- Semiconductor & electronics
- Textile
- Wire & cable

Key Products
- AC/DC drives & systems
- Electric actuators
- Controllers
- Gantry robots
- Gearheads
- Human machine interfaces
- Industrial PCs
- Inverters
- Linear motors, slides and stages
- Precision stages
- Stepper motors
- Servo motors, drives & controls
- Structural extrusions

FILTRATION

Key Markets
- Food & beverage
- Industrial machinery
- Life sciences
- Marine
- Mobile equipment
- Oil & gas
- Power generation
- Process
- Transportation

Key Products
- Analytical gas generators
- Compressed air & gas filters
- Condition monitoring
- Engine air, fuel & oil filtration & systems
- Hydraulic, lubrication & coolant filters
- Process, chemical, water & microfiltration filters
- Nitrogen, hydrogen & zero air generators

FLUID & GAS HANDLING

Key Markets
- Aerospace
- Agriculture
- Bulk chemical handling
- Construction machinery
- Food & beverage
- Fuel & gas delivery
- Industrial machinery
- Mobile
- Oil & gas
- Transportation
- Welding

Key Products
- Brass fittings & valves
- Diagnostic equipment
- Fluid conveyance systems
- Industrial hose
- PTFE & PFA hose, tubing & plastic fittings
- Rubber & thermoplastic hose & couplings
- Tube fittings & adapters
- Quick disconnects

HYDRAULICS

Key Markets
- Aerospace
- Aerial lift
- Agriculture
- Construction machinery
- Forestry
- Industrial machinery
- Mining
- Oil & gas
- Power generation & energy
- Truck hydraulics

Key Products
- Diagnostic equipment
- Hydraulic cylinders & accumulators
- Hydraulic motors & pumps
- Hydraulic systems
- Hydraulic valves & controls
- Power take-offs
- Rubber & thermoplastic hose & couplings
- Tube fittings & adapters
- Quick disconnects

PNEUMATICS

Key Markets
- Aerospace
- Conveyor & material handling
- Factory automation
- Food & beverage
- Life science & medical
- Machine tools
- Packaging machinery
- Transportation & automotive

Key Products
- Air preparation
- Compact cylinders
- Field bus valve systems
- Grippers
- Guided cylinders
- Manifolds
- Miniature fluidics
- Pneumatic accessories
- Pneumatic actuators & grippers
- Pneumatic valves and controls
- Rodless cylinders
- Rotary actuators
- Tie rod cylinders
- Vacuum generators, cups & sensors

PROCESS CONTROL

Key Markets
- Chemical & refining
- Food, beverage & dairy
- Medical & dental
- Microelectronics
- Oil & gas
- Power generation

Key Products
- Analytical sample conditioning products & systems
- Fluoropolymer chemical delivery fittings, valves & pumps
- High purity gas delivery fittings, valves & regulators
- Instrumentation fittings, valves & regulators
- Medium pressure fittings & valves
- Process control manifolds

SEALING & SHIELDING

Key Markets
- Aerospace
- Chemical processing
- Consumer
- Energy, oil & gas
- Fluid power
- General industrial
- Information technology
- Life sciences
- Military
- Semiconductor
- Telecommunications
- Transportation

Key Products
- Dynamic seals
- Elastomeric o-rings
- EMI shielding
- Extruded & precision-cut, fabricated elastomeric seals
- Homogeneous & inserted elastomeric shapes
- High temperature metal seals
- Metal & plastic retained composite seals
- Thermal management

Parker

ENGINEERING YOUR SUCCESS.

www.comoso.com

Smart phone scan here

Scan this QR code with your smart phone to download the complete CHE/CHD catalog. Look for QR code readers at an "App Store" for your mobile device.

03/13 / Catalog HY08-1137-6/NA

Parker Hannifin Corporation
Industrial Cylinder Division
500 South Wolf Road
Des Plaines, IL 60016 USA
phone (847) 298-2400
fax (800) 892-1008
www.parker.com/cylinder

Parker Hannifin Corporation
Motion and Control Division
160 Chisholm Drive
Milton, ON Canada L9T 3G9
direct (905) 693-3000
fax (905) 876-1958
www.parker.com

www.comoso.com