T6H/T7H Hybrid Technology Variable Piston Fixed Vane Pumps

The hybrid pump is a combination of fixed displacement vane pump B, C, D cartridges combined with a variable cartridge of PV20 or PV29 piston pump. The cartridges are driven by a common shaft without coupling in between they have a large common suction port and two or three independent outlet ports: one for the piston, one or two for the vane pump.

Pump Performance Data

Single Pump Model Series***	Displacement in³/rev (cc/rev)*	Max. Outlet Pressure** PSI (BAR)	Rated Drive Speed** RPM	Flow @1800 RPM and 0 PSI* GPM (LPM)	Input Horsepower @ 1800 RPM and 2000 PSI* HP (KW)
T6H20B	0.35 - 5.67 (5.7 - 92.9)	3500 (240)	2600	23.76 - 44.78 (89.9 - 169.5)	31.5 - 56.1 (23.5 - 41.8)
T6H20C	0.66 - 8.72 (10.8 - 142.9)	3500 (240)	2600	26.14 - 68.56 (99.0 - 259.5)	36 - 85.5 (26.8 - 63.8)
T6H29B	0.35 - 6.83 (5.7 - 111.9)	3000 (210)	2400	31.76 - 52.78 (120.2 - 199.8)	41 - 65.5 (30.6 - 48.8)
T6H29C	0.66 - 9.88 (10.8 - 161.9)	3000 (210)	2400	34.14 - 76.56 (129.2 - 289.8)	45.5 - 95 (33.9 - 70.8)
T6H29D	2.90 - 13.42 (47.5 - 219.9)	3000 (210)	2400	51.64 - 104.14 (195.5 - 394.2)	66.3 - 127.6 (49.4 - 95.2)
T6H29DB	32.46 - 16.47 (53.2 - 269.9)	3000 (210)	2400	56.78 - 151.7 (214.9 - 574.2)	70.3 - 156.1 (52.4 - 116.4)

* Piston pump at full displacement.
** Lower for larger displacements; see catalog.
*** See catalog on CD for complete information.

Pump Performance Data

Tables show data by cam ring size for van portion only (does not include piston portion).

T6H**B	Output Flow (lpm) @ 1800 RPM			Output Flow (GPM) @ 1800 RPM			Input Power (kW) @ 1800 RPM			Input Power (HP) @ 1800 RPM		
Size	0 BAR	140 BAR	320 BAR	0 PSI	2000 PSI	4350 PSI	7 BAR	140 BAR	320 BAR	100 PSI	2000 PSI	4350 PSI
B02	10.4	8.8	6.8	2.76	2.33	1.8	0.6	3.0	6.0	0.74	4.02	8.1
B03	17.6	16.0	14.0	4.66	4.23	3.7	0.6	4.7	9.6	0.85	6.24	12.93
B04	23.1	21.4	19.4	6.09	5.66	5.13	0.7	5.9	12.3	0.94	7.9	16.55
B05	28.6	27.0	25.0	7.56	7.13	6.6	0.8	7.2	15.1	1.02	9.62	20.29
B06	35.7	34.0	32.0	9.42	8.99	8.46	0.8	8.8	18.6	1.13	11.79	25
B07	40.5	38.9	36.9	10.7	10.27	9.74	0.9	9.9	21.1	1.2	13.29	28.26
B08	44.8	43.2	41.2	11.84	11.41	10.88	0.9	10.9	23.2	1.27	14.62	31.15
B10	57.2	55.6	53.6	15.12	14.69	14.16	1.1	13.8	29.4	1.46	18.45	39.48
B12	73.8	72.2	70.2	19.5	19.07	18.54	1.3	17.6	37.7	1.72	23.55	50.58
B15	90.0	88.4	86.6	23.78	23.35	22.88	1.5	21.3	42.8	1.97	28.55	57.35

*At 280 BAR (4060 PSI)

Markets	Applications
Industrial	Injection Molding

T6H/T7H Hybrid Technology Variable Piston Fixed Vane Pumps

Pump Performance Data

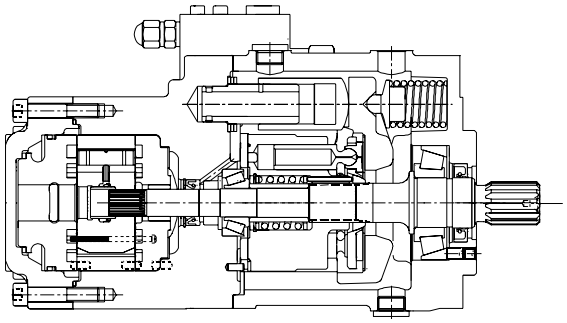

Benefits/Features

- Very compact
- High pressure ratings
- Low noise
- Independent outlets for fixed and variable flow allow simultaneous cycles
- Internal or external drain
- Choice of controls
- Wide range of acceptable fluids

Tables show data by cam ring size for vane portion only (does not include piston portion).

T6H**C	Output Flow (lpm) @ 1800 RPM			Output Flow (GPM) @ 1800 RPM			Input Power (kW) @ 1800 RPM			Input Power (HP) @ 1800 RPM		
Size	0 BAR	140 BAR	320 BAR	0 PSI	2000 PSI	3500 PSI	7 BAR	140 BAR	320 BAR	100 PSI	2000 PSI	3500 PSI
*03	19.5	13.7	–	5.14	3.61	—	1.6	6.3	10.0	2.11	8.45	13.38
*05	31.0	25.2	21.0	8.18	6.65	5.56	1.7	8.9	14.6	2.29	12	19.59
*06	38.3	32.6	28.4	10.13	8.6	7.51	1.8	10.6	17.6	2.4	14.28	23.57
*08	47.5	41.7	37.6	12.55	11.02	9.93	1.9	12.8	21.3	2.54	17.11	28.53
*10	61.4	55.6	51.5	16.22	14.69	13.6	2.1	15.9	26.8	2.76	21.38	36
*12	66.8	61.0	56.9	17.64	16.11	15.02	2.1	17.2	29.0	2.84	23.05	38.92
*14	82.8	77.0	72.9	21.88	20.35	19.26	2.3	20.9	35.5	3.09	27.99	47.56
*17	105.0	99.2	95.0	27.73	26.2	25.11	2.6	26.0	44.4	3.43	34.81	59.51
*20	114.8	109.0	103.8	30.34	28.81	27.42	2.7	28.2	48.4	3.58	37.86	64.85
*22	126.5	120.7	116.6	33.43	31.9	30.81	2.8	30.9	53.1	3.76	41.47	71.16
*25	142.7	136.9	132.8	37.71	36.18	35.09	3.0	34.6	59.6	4.01	46.46	79.9
*28	159.8	154.1	151.2	42.23	40.7	39.94	3.2	38.6	57.2	4.27	51.74	76.73
*31	180.0	174.2	171.3	47.56	46.03	45.27	3.4	43.2	64.2	4.58	57.95	86.06

*At 210 BAR (3000 PSI)

T6H29D	Output Flow (lpm) @ 1800 RPM			Output Flow (GPM) @ 1800 RPM			Input Power (kW) @ 1800 RPM			Input Power (HP) @ 1800 RPM		
Size	0 BAR	140 BAR	320 BAR	0 PSI	2000 PSI	3500 PSI	7 BAR	140 BAR	320 BAR	100 PSI	2000 PSI	3500 PSI
014	85.7	77.4	71.2	22.64	20.46	18.82	3.0	21.9	36.8	4.02	29.31	49.34
017	104.8	96.5	90.3	27.68	25.50	23.86	3.2	26.2	44.5	4.31	35.20	59.64
020	118.8	110.6	104.4	31.39	29.21	27.57	3.4	29.5	50.1	4.53	39.52	67.21
024	143.1	134.9	128.7	37.81	35.63	33.99	3.7	35.1	59.9	4.91	47.02	80.32
028	161.5	153.2	147.0	42.66	40.48	38.84	3.9	39.3	67.3	5.19	52.68	90.23
031	176.9	168.7	162.5	46.75	44.57	42.93	4.1	42.8	73.5	5.43	57.45	98.58
035	199.8	191.6	185.4	52.79	50.61	48.97	4.3	48.1	82.7	5.78	64.50	110.91
038	216.5	208.3	202.1	57.21	55.03	53.39	4.5	51.9	89.4	6.04	69.66	119.94
042	244.8	236.6	230.4	64.68	62.5	60.86	4.8	58.4	100.8	6.47	78.37	135.19
045	262.3	254.0	247.8	69.29	67.11	65.47	5.0	62.5	107.8	6.74	83.75	144.61
050	284.4	276.2	271.7	75.14	72.96	71.78	5.3	67.5	100.3	7.08	90.58	134.54

* At 3000 PSI

T6H/T7H Hybrid Technology Variable Piston Fixed Vane Pumps

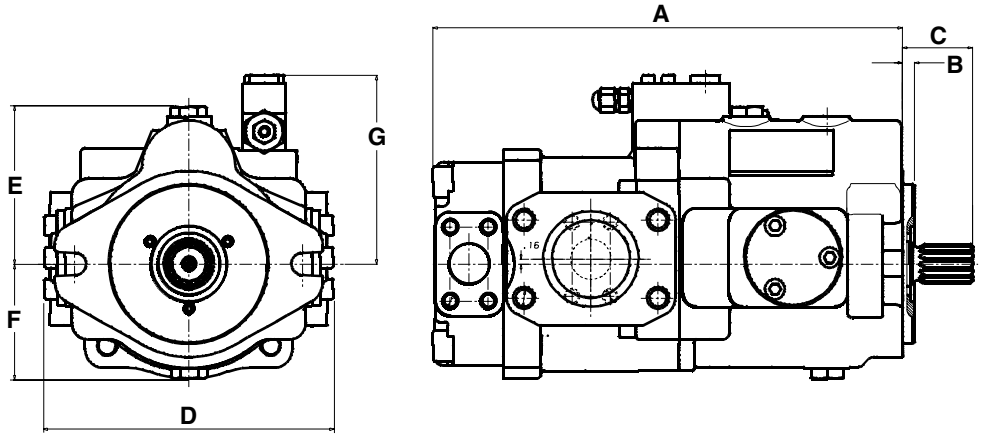

Dimensions, inch (mm)

Series	A	B max	C Max.	D Max	E	F	G Max.	Weight, kg (lb)
T6H20B/C	12.64 (321.1)	0.31 (7.9)	2.75 (69.8)	8.86 (225.0)	4.54 (115.3)	3.19 (81.0)	6.77 (172.0)	81.6 (37.1)
T6H29B/C	13.27 (337.1)	0.375 (9.5)	3.31 (84.1)	9.056 (230.0)	4.91 (124.7)	3.59 (91.2)	5.9 (149.9)	108.0 (49.1)
T6H29D	14.70 (373.4)	0.375 (9.5)	3.31 (84.1)	9.06 (230.1)	4.92 (125.0)	3.59 (91.2)	5.9 (149.9)	132.2 (60.1)
T6H29DB	19.30 (490.2)	0.375 (9.5)	3.31 (84.1)	9.06 (230.1)	4.95 (125.7)	3.59 (91.2)	5.9 (149.9)	158.7 (72.1)

www.comoso.com 800.696.6165

Vane Pumps
T6H/T7H Model Ordering Code

T6H	[ ]	–	[ ]	–	[ ]	–	[ ]	[ ]	[ ]	[ ]	–	[ ]	[ ]	[ ]	[ ]	[ ]	–	[ ]	–	[ ]
Hybrid Pump	Series & P1 Size (P1)		Cam Ring (P2)		Cam Ring (P3)		Shaft	Rotation	Seal Class	Design Level		Connection	Control	Control Accessories	Variable Flanges	Variable Ports		Porting Combination[1]		Modifications (Code entered at factory)

Code	P1 Size
20B 20C	2.62 in³/rev (42.9 cc/rev)
29B 29C 29D 29DB	3.78 in³/rev (62.0 cc/rev)

Size	P2 & P3 Cam Ring Size (See Table Below)	
	P2	P3*
T6H20B	Use B Codes	
T6H20C	Use C Codes	
T6H29B	Use B Codes	
T6H29C	Use C Codes	
T6H29D	Use D Codes	
T6H29DB	Use D Codes	Use B Codes

*P3 required for double pumps (DB) only.
Omit for single pumps.

Code	Shaft	
	T6H20	T6H29
1	Keyed SAE BB	Keyed SAE C
3	Splined SAE C	Splined SAE C
4	Splined SAE BB	
5	Keyed SAE C	

Code	Rotation*
R	CW
L	CCW

*As viewed from shaft end.

Code	Seal Class
1	S1 (Buna N)
5	S5 (fluorocarbon)

Code	Design Level
C	T6H20C
B	All Other Sizes

Code	Connection (Drain + Vent.)
0	Ext. Drain + UNF Thread
2	Ext. Drain + BSPP Thread
3	Int. Drain + UNF Thread
4	Int. Drain + BSPP Thread

Code	Control
C	Compensator
F	RC Pilot Operated Compensator
L	RC Pilot Operated Compensator, Load Sensing
X*	RC Pilot Operated Compensator with Vent Valve 24 VDC

*Use with external drain only.

Code	Control Accessories
0	Maximum Flow
9	90% Max Flow
8	80% Max Flow
7	70% Max Flow
6	60% Max Flow
5	50% Max Flow

Code	Variable Flange Connection
0	SAE 4 Bolt Flange (J518c), UNC Thread
M	SAE 4 Bolt Flange (J518c), Metric Thread

Code	Variable Port		
	B & C P2	D P2	DB P3
0	1"	1¼"	1"
1	3/4"		3/4"

Cam Ring Codes

B Codes	Delivery GPM (LPM)	C Codes	Delivery GPM (LPM)	D Codes	Delivery GPM (LPM)
B02	1.84 (7.0)	*03	3.42 (12.9)	014	15.09 (57.1)
B03	3.11 (11.8)	*05	5.45 (20.6)	017	18.45 (69.8)
B04	4.06 (15.4)	*06	6.75 (25.6)	020	20.93 (79.2)
B05	5.04 (19.1)	*08	8.37 (31.7)	024	25.20 95.4)
B06	6.28 (23.8)	*10	10.81 (40.9)	028	28.44 (107.7)
B07	7.13 (27.0)	*12	11.76 (44.5)	031	31.16 (118.0)
B08	7.89 (29.9)	*14	14.58 (55.2)	035	35.19 (133.2)
B10	10.08 (38.1)	*17	18.48 (70.0)	038	38.14 (144.4)
B12	13.00 (49.2)	*20	20.23 (76.6)	042	43.12 (163.2)
B15	15.85 (60.0)	*22	22.29 (84.4)	045	46.19 (174.9)
		*25	25.14 (95.2)	050	50.09 (189.6)
		*28	28.15 (106.6)		
		*31	31.70 (120.0)		

* 0 = uni-rotational; B = bi-rotational
[1]Several combinations are available. See Catalog on CD.
= Not Available

www.comoso.com 800.696.6165