Flow Controls In-Line

MATERIALS OF CONSTRUCTION	
BODY:	GLASS REINFORCED NYLON 6.6
GRIPPING RING:	STAINLESS STEEL
ADJUSTMENT SCREWS	NICKEL-PLATED BRASS
LOCKING NUT:	NICKEL-PLATED BRASS
BASE:	NICKEL-PLATED BRASS

NOMENCLATURE	
EXAMPLE:FC832-4	ATTRIBUTE:
FC	FLOW CONTROL
8	IN-LINE
3	NYLON BODY
2	TUBE X TUBE
4	1/4 TUBE O.D.

APPLICABLE TUBE	
TUBE O.D.	5/32, 1/4, 5/16, 3/8, 1/2
TUBE O.D. (MM)	4, 6, 8, 10, 12

SPECIFICATIONS	
PRESSURE RANGE:	15 TO 145 PSI
TEMPERATURE RANGES:	30° TO 160°F
WORKING FLUID:	COMPRESSED AIR

In-line flow controls are unidirectional flow control valves. Intake air flows freely through the flow control; exhaust air is metered out through a specially designed adjustment screw. An arrow on the body of the valve indicates the direction of controlled flow. They can be easily added to existing circuitry. Simply splice it into the cylinder port line.

They can be used individually or they may be stacked together using two joining clips.

Parker Hannifin Corporation
Fluid System Connectors
Otsego, Michigan

www.comoso.com

B

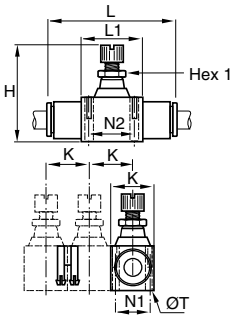

FC832 In-Line Flow Control

PART NO.	TUBE SIZE (IN)	HEX 1 MM	H CLOSED	H OPEN	K	L	L1	N1	N2	T
FC832-4	1/4	8	1.54	1.74	0.66	2.00	0.90	0.43	0.66	0.12
FC832-5	5/16	11	1.73	1.97	0.73	2.38	1.02	0.49	0.79	0.13
FC832-6	3/8	14	2.03	2.38	0.94	2.87	1.29	0.62	1.01	1.60
FC832-8	1/2	14	2.24	2.63	1.09	3.35	1.37	0.78	1.07	0.16

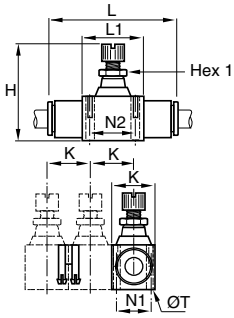

FCB832 In-Line Bi-directional Flow Control

PART NO.	TUBE SIZE (IN)	HEX 1 MM	H CLOSED	H OPEN	K	L	L1	N1	N2	T
FCB832-5/32	5/32	5	1.15	1.31	0.47	1.52	0.59	0.31	0.43	0.09
FCB832-4	1/4	8	1.54	1.74	0.66	2.00	0.90	0.43	0.66	0.12
FCB832-5	5/16	11	1.73	1.97	0.73	2.38	1.02	0.49	0.79	0.13

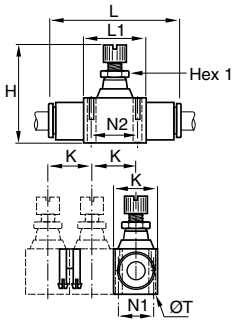

FC832 In-Line Flow Control

PART NO.	TUBE SIZE (MM)	HEX 1	H CLOSED	H OPEN	K	L	L1	N1	N2	T
FC832-6M	6	8	39.5	44.5	17.0	54.0	23.0	11.0	17.0	3.2
FC832-8M	8	11	44.0	50.0	18.5	60.5	26.0	12.5	20.0	3.2
FC832-10M	10	14	52.0	61.0	24.0	76.0	33.0	16.0	26.0	4.2
FC832-12M	12	14	57.5	67.5	28.0	86.0	35.0	20.0	27.5	4.2

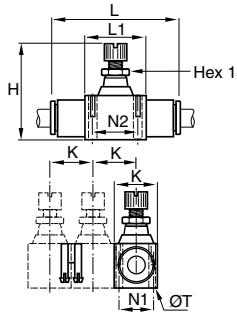

FCB832 In-Line Bi-directional Flow Control

PART NO.	TUBE SIZE (MM)	HEX 1	H CLOSED	H OPEN	K	L	L1	N1	N2	T
FCB832-4M	4	5	29.5	33.5	12.0	39.0	15.0	8.0	11.0	2.2
FCB832-6M	6	8	39.5	44.5	17.0	54.0	23.0	11.0	17.0	3.2
FCB832-8M	8	11	44.0	50.0	18.5	60.5	26.0	12.5	20.0	3.2

Parker Hannifin Corporation
Fluid System Connectors
Otsego, Michigan

www.comoso.com

B

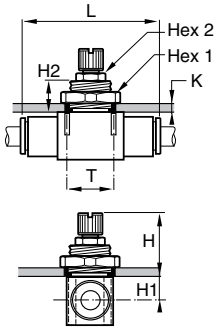

FCPM832 In-Line Panel Mountable Flow Control

PART NO.	TUBE SIZE (MM)	HEX 1	HEX 2	H CLOSED	H OPEN	K	L	H1	H2	T
FCPM832-4M	4	14		21.5	25.5	6.0	39.0	6.5	11.0	10.5
FCPM832-6M	6	19		27.5	32.5	7.0	54.0	7.5	13.5	16.5
FCPM832-8M	8	24	11	28.5	34.5	7.0	60.5	9.0	13.5	18.5
FCPM832-10M	10	30	14	29.5	38.5	7.0	76.0	11.5	13.5	24.5
FCPM832-12M	12	32	14	32.0	42.0	8.0	86.0	12.5	15.5	27.5

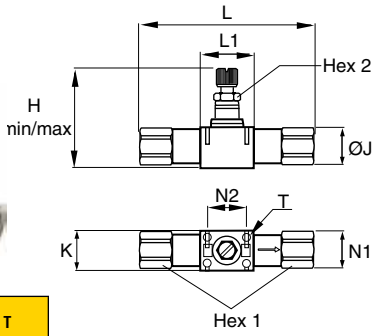

FC836 Threaded In-Line Flow Control

PART NO.	NPT	HEX 1 MM	HEX 2 MM	H CLOSED	H OPEN	K	L	L1	N1	N2	T
FC836-2	1/8	13	8.00	1.56	1.75	0.67	2.70	0.91	0.43	0.67	0.12
FC836-4	1/4	16	11.00	1.73	1.97	0.73	3.27	1.02	0.49	0.79	0.12
FC836-6	3/8	22	14.00	2.05	2.40	0.94	3.82	1.30	0.63	1.02	0.16
FC836-8	1/2	24	14.00	2.26	2.66	1.10	4.76	1.38	0.79	1.08	0.16

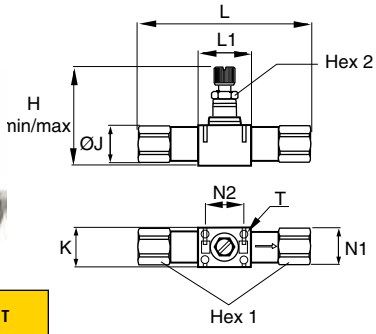

FC836 Threaded In-Line Flow Control - BSPP

PART NO.	BSPP	HEX 1	HEX 2	H CLOSED	H OPEN	K	L	N1	N2	T
FC836-2G	1/8	13	8	39.5	44.5	17.0	68.5	11.0	17.0	3.2
FC836-4G	1/4	16	11	44.0	50.0	18.5	83.0	12.5	20.0	3.2
FC836-6G	3/8	19	14	52.0	61.0	24.0	97.0	16.0	26.0	4.2
FC836-8G	1/2	24	14	57.5	67.5	28.0	121.0	20.0	27.5	4.2

Parker Hannifin Corporation
Fluid System Connectors
Otsego, Michigan

www.comoso.com