2-way

Direct Acting Valves
1/8" - 3/4" NPT

General Description:

2-way Direct Acting valves are used in a wide variety of applications that require zero pressure differential and medium to high pressures and flow. These valves are available in a variety of elastomers as well as, brass and stainless construction.

Installation
Valves can be mounted in any position. The preferred orientation is with the coil vertical and upright.

Standard Materials of Construction
Please refer to page A24

Compatible Fluids
Lubricated Air, Inert Gases, Water and Light Oil (300 SSU). Additional fluids compatible with alternate materials of construction (consult factory).

Use of non-lubricated gaseous media can affect valve life.

Electrical Characteristics:

Standard Voltages:
AC –24/60
120/60–110/50
240/60–220/50
DC –12, 24 & 120
For other Voltages – consult factory

Coil Classification:
Class F standard
Class H available

Agency Approvals:
Standard valves with NEMA 4X or explosion proof solenoid enclosures are UL Listed and CSA Certified. For additional details, consult factory.

Maximum Ambient Temperature
150°F

Please refer to page A24 for details.

Applications:

- Instrumentation equipment
- Analyzers and diagnostic equipment
- Medical and dental equipment
- Portable welding equipment
- Spraying equipment
- Lubrication equipment
- Beverage dispensing & vending machines
- Oil burners
- Humidification and misting equipment
- Mobile fuel shut off
- Textile and dry cleaning equipment
- Air horns
- Pneumatic fan clutch
- Irrigation equipment

Parker Hannifin Corporation
Fluid Control Division
1 800 825 8305 (1 800 Valve05)
www.parker.com/fcd

www.comoso.com

2-Way Direct Acting - Normally Closed- Brass

Port Size NPT	Orifice Size in.	Flow Factor Cv	Operating Pressure Differential (MOPD) PSI				Watt	Max. Media Temp. °F	Seal	Pressure Vessel Number	Reference	
			Min.	Air, Inert Gas	Water	Light Oil					Coil	Valve
AC TECHNICAL SPECIFICATIONS												
1/8	1/16	0.11	0	1000	1000	1000	10	165	PCTFE	7121KBN1GF00	7	A13
1/8	1/8	0.31	0	365	365	365	10	165	PCTFE	7121KBN1NF00	7	A13
1/4	3/64	0.06	0	750	750	500	6	180	NBR	04F20C1103AAF	1	A3
1/4	1/16	0.11	0	1000	1000	1000	10	165	PCTFE	7121KBN2GF00	7	A13
1/4	3/32	0.17	0	360	340	160	6	180	NBR	04F20C1106AAF	1	A3
1/4	1/8	0.31	0	365	365	365	10	165	PCTFE	7121KBN2NF00	7	A13
1/4	1/8	0.31	0	145	145	145	10	185	FKM	7121KBN2NV00	7	A13
1/4	1/8	0.35	0	300	300	200	11	180	NBR	04F20C1108ACF	4	A16
1/4	1/8	0.35	0	140	165	90	6	180	NBR	04F20C1108AAF	1	A3
1/4	5/32	0.50	0	180	200	145	11	180	NBR	04F20C2110ACF	4	A4
1/4	5/32	0.52	0	120	120	120	10	185	FKM	7121KBN2QV00	7	A13
1/4	7/32	0.72	0	100	100	100	16	180	NBR	04F20C2114BDF	5	A4
1/4	13/64	0.76	0	80	80	80	10	185	FKM	7121KBN2SV00	7	A13
1/4	9/32	0.88	0	90	100	90	16	200	NBR	04F20C2118BDF	5	A4
3/8	5/32	0.52	0	150	150	145	11	180	NBR	06F20C2110ACF	4	A7
3/8	7/32	0.72	0	100	100	100	16	200	NBR	06F20C2114BDF	5	A7
3/8	1/4	0.83	0	55	55	55	10	185	FKM	7121KBN3UV00	7	A13
3/8	9/32	0.85	0	90	80	80	16	200	NBR	06F20C2118BDF	5	A7
3/8	5/16	1.10	0	20	20	-	11	180	NBR	06F20C2120ACF	4	A7
3/8	5/16	1.10	0	15	12	-	6	180	NBR	06F20C2120AAF	1	A8
1/2	7/16	2.50	0	35	35	35	22	185	FKM	7121KBN44V00	8	A14
1/2	7/16	2.50	0	17.5	17.5	17.5	10	185	FKM	7121KBN44V00	7	A14
1/2	7/16	2.80	0	15	15	-	16	200	NBR	08F20C2128ADF	5	A9
3/4	3/4	5.00	0	4	4	-	16	200	NBR	12F20C2148ADF	5	A9

Parker Hannifin Corporation
Fluid Control Division
1 800 825 8305 (1 800 Valve05)
www.parker.com/fcd

www.comoso.com

2-Way Direct Acting - Normally Closed- Brass (Continued)

Port Size NPT	Orifice Size in.	Flow Factor Cv	Operating Pressure Differential (MOPD) PSI				Watt	Max. Media Temp. °F	Seal	Pressure Vessel Number	Reference	
			Min.	Air, Inert Gas	Water	Light Oil					Coil	Valve
DC TECHNICAL SPECIFICATIONS												
1/8	1/16	0.11	0	700	700	700	22	165	PCTFE	7121KBN1GF00	8	A13
1/8	1/16	0.11	0	435	435	435	10	165	PCTFE	7121KBN1GF00	7	A13
1/8	1/8	0.31	0	205	205	205	22	165	PCTFE	7121KBN1NF00	8	A13
1/8	1/8	0.31	0	125	125	125	10	165	PCTFE	7121KBN1NF00	7	A13
1/4	3/64	0.06	0	500	500	500	9.5	120	NBR	04F20C1103A1F	3	A3
1/4	1/16	0.11	0	700	700	700	22	165	PCTFE	7121KBN2GF00	8	A13
1/4	1/16	0.11	0	435	435	435	10	165	PCTFE	7121KBN2GF00	7	A13
1/4	3/32	0.17	0	150	125	125	9.5	120	NBR	04F20C1106A1F	3	A3
1/4	1/8	0.31	0	205	205	205	22	165	PCTFE	7121KBN2NF00	8	A13
1/4	1/8	0.31	0	125	125	125	10	185	FKM	7121KBN2NV00	7	A13
1/4	1/8	0.31	0	125	125	125	22	185	FKM	7121KBN2NV00	8	A13
1/4	1/8	0.31	0	125	125	125	10	165	PCTFE	7121KBN2NF00	7	A13
1/4	1/8	0.35	0	75	70	70	11.5	150	NBR	04F20C1108A3F	6	A16
1/4	1/8	0.35	0	65	60	60	9.5	120	NBR	04F20C1108A1F	3	A3
1/4	5/32	0.52	0	75	75	75	22	185	FKM	7121KBN2QV00	8	A13
1/4	5/32	0.52	0	60	60	60	10	185	FKM	7121KBN2QV00	7	A13
1/4	13/64	0.76	0	40	40	40	22	185	FKM	7121KBN2SV00	8	A13
1/4	13/64	0.76	0	30	30	30	10	185	FKM	7121KBN2SV00	7	A13

www.comoso.com

2-Way Direct Acting - Normally Closed- Brass (Continued)

Port Size NPT	Orifice Size in.	Flow Factor Cv	Operating Pressure Differential (MOPD) PSI				Watt	Max. Media Temp. °F	Seal	Pressure Vessel Number	Reference	
			Min.	Air, Inert Gas	Water	Light Oil					Coil	Valve
DC TECHNICAL SPECIFICATIONS												
3/8	7/32	0.72	0	25	25	25	11.5	150	NBR	06F20C2114A3F	6	A7
3/8	1/4	0.83	0	20	20	20	10	185	FKM	7121KBN3UV00	7	A13
3/8	1/4	0.83	0	20	20	20	22	185	FKM	7121KBN3UV00	8	A13
3/8	9/32	0.85	0	14	14	14	9.5	150	NBR	06F20C2118A1F	3	A8
3/8	5/16	1.10	0	9	9	-	11.5	150	NBR	06F20C2120A3F	6	A7
3/8	5/16	1.10	0	3	3	-	9.5	120	NBR	06F20C2120A1F	3	A8
1/2	7/16	2.50	0	5	5	5	10	185	FKM	7121KBN44V00	7	A14
1/2	7/16	2.50	0	10	10	10	22	185	FKM	7121KBN44V00	8	A14
1/2	7/16	2.80	0	3	3	-	11.5	180	NBR	08F20C2128A3F	6	A9

2-Way Direct Acting - Normally Closed- Stainless Steel

Port Size NPT	Orifice Size in.	Flow Factor Cv	Operating Pressure Differential (MOPD) PSI				Watt	Max. Media Temp. °F	Seal	Pressure Vessel Number	Reference	
			Min.	Air, Inert Gas	Water	Light Oil					Coil	Valve
AC TECHNICAL SPECIFICATIONS												
1/8	3/64	0.06	0	1000	1000	1000	10	165	PCTFE	71215SN1EF00	7	A10
1/8	3/64	0.06	0	450	450	450	10	185	NBR	71215SN1EN00	7	A10
1/8	1/16	0.10	0	700	700	700	10	165	PCTFE	71215SN1GF00	7	A10
1/8	1/16	0.10	0	350	350	350	10	185	NBR	71215SN1GN00	7	A10
1/8	3/32	0.18	0	650	650	650	22	165	PCTFE	71215SN1KF00	8	A10
1/8	3/32	0.18	0	260	260	260	10	165	PCTFE	71215SN1KF00	7	A10
1/8	3/32	0.18	0	275	275	275	10	185	NBR	71215SN1KN00	7	A10
1/8	1/8	0.28	0	520	520	520	22	165	PCTFE	71215SN1MF00	8	A10
1/8	1/8	0.28	0	200	200	200	10	185	NBR	71215SN1MN00	7	A10
1/8	1/8	0.28	0	200	200	200	10	165	PCTFE	71215SN1MF00	7	A10
1/8	5/32	0.40	0	150	150	150	22	185	NBR	71215SN1QN00	8	A10
1/8	5/32	0.40	0	110	110	110	10	185	NBR	71215SN1QN00	7	A10
1/8	3/16	0.50	0	90	90	90	22	185	NBR	71215SN1SN00	8	A10
1/8	3/16	0.50	0	80	80	80	10	185	NBR	71215SN1SN00	7	A10
1/8	1/4	0.75	0	70	70	70	22	185	NBR	71215SN1VN00	8	A10
1/8	1/4	0.75	0	40	40	40	10	185	NBR	71215SN1VN00	7	A10

Parker Hannifin Corporation
Fluid Control Division
1 800 825 8305 (1 800 Valve05)
www.parker.com/fcd

www.comoso.com

2-Way Direct Acting - Normally Closed- Stainless Steel (Continued)

Port Size NPT	Orifice Size in.	Flow Factor Cv	Operating Pressure Differential (MOPD) PSI				Watt	Max. Media Temp. °F	Seal	Pressure Vessel Number	Reference	
			Min.	Air, Inert Gas	Water	Light Oil					Coil	Valve
AC TECHNICAL SPECIFICATIONS												
1/4	3/64	0.06	0	1000	1000	1000	10	165	PCTFE	71215SN2EF00	7	A10
1/4	3/64	0.06	0	450	450	450	10	185	NBR	71215SN2EN00	7	A10
1/4	1/16	0.10	0	700	700	700	10	165	PCTFE	71215SN2GF00	7	A10
1/4	1/16	0.10	0	350	350	350	10	185	NBR	71215SN2GN00	7	A10
1/4	3/32	0.18	0	650	650	650	22	165	PCTFE	71215SN2KF00	8	A10
1/4	3/32	0.18	0	275	275	275	10	185	NBR	71215SN2KN00	7	A10
1/4	3/32	0.18	0	260	260	260	10	165	PCTFE	71215SN2KF00	7	A10
1/4	1/8	0.28	0	520	520	520	22	165	PCTFE	71215SN2MF00	8	A10
1/4	1/8	0.28	0	200	200	200	10	165	PCTFE	71215SN2MF00	7	A10
1/4	1/8	0.28	0	200	200	200	22	185	NBR	71215SN2MN00	8	A10
1/4	5/32	0.40	0	150	150	150	22	185	NBR	71215SN2QN00	8	A10
1/4	5/32	0.40	0	110	110	110	10	185	NBR	71215SN2QN00	7	A10
1/4	3/16	0.50	0	90	90	90	22	185	NBR	71215SN2SN00	8	A10
1/4	3/16	0.50	0	80	80	80	10	185	NBR	71215SN2SN00	7	A10
1/4	1/4	0.75	0	70	70	70	22	185	NBR	71215SN2VN00	8	A10
1/4	1/4	0.75	0	40	40	40	10	185	NBR	71215SN2VN00	7	A10
1/4	5/16	1.10	0	55	55	55	22	185	NBR	71215SN21N00	8	A20
1/4	5/16	1.10	0	20	20	20	10	185	NBR	71215SN21N00	7	A20
3/8	3/8	2.00	0	25	25	25	22	185	NBR	712155N33N00	8	A15
3/8	3/8	2.00	0	6	6	6	10	185	NBR	71215SN33N00	7	A15
3/8	3/8	2.00	5	11	11	11	10	185	NBR	71215SN33NHP**	7	A15

**** 71215SN33NHP: 5-11 PSI is the operating range for bubble tight sealing. Valves may leak slightly if pressure differential falls below 5 PSI.**

www.comoso.com

2-Way Direct Acting - Normally Closed- Stainless Steel (Continued)

Port Size NPT	Orifice Size in.	Flow Factor Cv	Operating Pressure Differential (MOPD) PSI				Watt	Max. Media Temp. °F	Seal	Pressure Vessel Number	Reference	
			Min.	Air, Inert Gas	Water	Light Oil					Coil	Valve
DC TECHNICAL SPECIFICATIONS												
1/8	3/64	0.06	0	1000	1000	1000	22	165	PCTFE	71215SN1EF00	8	A10
1/8	3/64	0.06	0	520	520	520	10	165	PCTFE	71215SN1EF00	7	A10
1/8	3/64	0.06	0	450	450	450	10	185	NBR	71215SN1EN00	7	A10
1/8	1/16	0.10	0	700	700	700	22	165	PCTFE	71215SN1GF00	8	A10
1/8	1/16	0.10	0	350	350	350	10	185	NBR	71215SN1GN00	7	A10
1/8	1/16	0.10	0	350	350	350	10	165	PCTFE	71215SN1GF00	7	A10
1/8	3/32	0.18	0	300	300	300	22	165	PCTFE	71215SN1KF00	8	A10
1/8	3/32	0.18	0	275	275	275	10	185	NBR	71215SN1KN00	7	A10
1/8	3/32	0.18	0	130	130	130	10	165	PCTFE	71215SN1KF00	7	A10
1/8	1/8	0.28	0	200	200	200	22	185	NBR	71215SN1MN00	8	A10
1/8	1/8	0.28	0	200	200	200	22	165	PCTFE	71215SN1MF00	8	A10
1/8	1/8	0.28	0	150	150	150	10	185	NBR	71215SN1MN00	7	A10
1/8	1/8	0.28	0	100	100	100	10	165	PCTFE	71215SN1MF00	7	A10
1/8	5/32	0.40	0	130	130	130	22	185	NBR	71215SN1QN00	8	A10
1/8	5/32	0.40	0	60	60	60	10	185	NBR	71215SN1QN00	7	A10
1/8	3/16	0.50	0	70	70	70	22	185	NBR	71215SN1SN00	8	A10
1/8	3/16	0.50	0	25	25	25	10	185	NBR	71215SN1SN00	7	A10
1/8	1/4	0.75	0	30	30	30	22	185	NBR	71215SN1VN00	8	A10
1/8	1/4	0.75	0	10	10	10	10	185	NBR	71215SN1VN00	7	A10
1/4	3/64	0.06	0	1000	1000	1000	22	165	PCTFE	71215SN2EF00	8	A10
1/4	3/64	0.06	0	520	520	520	10	165	PCTFE	71215SN2EF00	7	A10
1/4	3/64	0.06	0	450	450	450	10	185	NBR	71215SN2EN00	7	A10
1/4	1/16	0.10	0	700	700	700	22	165	PCTFE	71215SN2GF00	8	A10
1/4	1/16	0.10	0	350	350	350	10	165	PCTFE	71215SN2GF00	7	A10
1/4	1/16	0.10	0	350	350	350	10	185	NBR	71215SN2GN00	7	A10
1/4	3/32	0.18	0	300	300	300	22	165	PCTFE	71215SN2KF00	8	A10
1/4	3/32	0.18	0	275	275	275	10	185	NBR	71215SN2KN00	7	A10
1/4	3/32	0.18	0	130	130	130	10	165	PCTFE	71215SN2KF00	7	A10
1/4	1/8	0.28	0	200	200	200	22	165	PCTFE	71215SN2MF00	8	A10
1/4	1/8	0.28	0	200	200	200	22	185	NBR	71215SN2MN00	8	A10
1/4	1/8	0.28	0	150	150	150	10	185	NBR	71215SN2MN00	7	A10
1/4	1/8	0.28	0	100	100	100	10	165	PCTFE	71215SN2MF00	7	A10
1/4	5/32	0.40	0	60	60	60	10	185	NBR	71215SN2QN00	7	A10

Parker Hannifin Corporation
Fluid Control Division
1 800 825 8305 (1 800 Valve05)
www.parker.com/fcd

www.comoso.com

2-Way Direct Acting - Normally Closed- Stainless Steel (Continued)

Port Size NPT	Orifice Size in.	Flow Factor Cv	Operating Pressure Differential (MOPD) PSI				Watt	Max. Media Temp. °F	Seal	Pressure Vessel Number	Reference	
			Min.	Air, Inert Gas	Water	Light Oil					Coil	Valve
DC TECHNICAL SPECIFICATIONS												
1/4	5/32	0.40	0	130	130	130	22	185	NBR	71215SN2QN00	8	A10
1/4	3/16	0.50	0	70	70	70	22	185	NBR	71215SN2SN00	8	A10
1/4	3/16	0.50	0	25	25	25	10	185	NBR	71215SN2SN00	7	A10
1/4	1/4	0.75	0	30	30	30	22	185	NBR	71215SN2VN00	8	A10
1/4	1/4	0.75	0	10	10	10	10	185	NBR	71215SN2VN00	7	A10
1/4	5/16	1.10	0	10	10	10	22	185	NBR	71215SN21N00	8	A20
1/4	5/16	1.10	0	3	3	3	10	185	NBR	71215SN21N00	7	A20
3/8	3/8	2.00	0	5	5	5	22	185	NBR	71215SN33N00	8	A15

www.comoso.com

2-Way Direct Acting - Normally Open- Brass

Port Size NPT	Orifice Size in.	Flow Factor Cv	Operating Pressure Differential (MOPD) PSI				Watt	Max. Media Temp. °F	Seal	Pressure Vessel Number	Reference	
			Min.	Air, Inert Gas	Water	Light Oil					Coil	Valve
AC TECHNICAL SPECIFICATIONS												
1/8	1/16	0.11	0	435	435	435	10	165	PCTFE	7122KBN1GF00	7	A13
1/8	3/32	0.15	0	275	200	150	6	180	NBR	02F20O1106AAF	1	A17
1/8	3/32	0.21	0	175	175	175	10	165	PCTFE	7122KBN1LF00	7	A13
1/8	1/8	0.21	0	125	100	85	6	180	NBR	02F20O1108AAF	1	A17
1/4	3/64	0.06	0	750	700	700	11	180	NBR	04F20O1103ACF	4	A5
1/4	1/16	0.11	0	435	435	435	10	165	PCTFE	7122KBN2GF00	7	A13
1/4	3/32	0.17	0	300	250	230	11	180	NBR	04F20O1106ACF	4	A5
1/4	3/32	0.21	0	175	175	175	10	165	PCTFE	7122KBN2LF00	7	A13
1/4	1/8	0.35	0	130	110	100	11	180	NBR	04F20O1108ACF	4	A5
1/4	5/32	0.49	0	85	75	60	11	180	NBR	04F20O2110ACF	4	A6
1/4	9/32	0.96	0	30	25	20	11	180	NBR	04F20O2118ACF	4	A6
1/2	7/16	2.20	0	15	15	-	16	200	NBR	08F20O2128ADF	5	A18
3/4	3/4	5.50	0	2	2	-	11	180	NBR	12F20O2148ACF	4	A18
DC TECHNICAL SPECIFICATIONS												
1/8	1/16	0.09	0	400	250	150	9.5	120	NBR	02F20O1104A1F	3	A17
1/8	1/16	0.11	0	435	435	435	10	165	PCTFE	7122KBN1GF00	7	A13
1/8	3/32	0.15	0	190	110	110	9.5	120	NBR	02F20O1106A1F	3	A17
1/8	3/32	0.21	0	175	175	175	10	165	PCTFE	7122KBN1LF00	7	A13
1/8	1/8	0.21	0	80	60	50	9.5	120	NBR	02F20O1108A1F	3	A17
1/4	3/64	0.06	0	500	500	500	11.5	140	NBR	04F20O1103A3F	6	A5
1/4	1/16	0.11	0	435	435	435	10	165	PCTFE	7122KBN2GF00	7	A13
1/4	3/32	0.17	0	200	150	125	11.5	150	NBR	04F20O1106A3F	6	A5
1/4	3/32	0.21	0	175	175	175	10	165	PCTFE	7122KBN2LF00	7	A13
1/4	1/8	0.35	0	80	60	60	11.5	150	NBR	04F20O1108A3F	6	A5
1/4	5/32	0.49	0	45	30	30	11.5	150	NBR	04F20O2110A3F	6	A6
1/4	9/32	0.96	0	15	15	15	11.5	150	NBR	04F20O2118A3F	6	A6

Parker Hannifin Corporation
Fluid Control Division
1 800 825 8305 (1 800 Valve05)
www.parker.com/fcd

www.comoso.com

2-Way Direct Acting - Normally Open- Stainless Steel

Port Size NPT	Orifice Size in.	Flow Factor Cv	Operating Pressure Differential (MOPD) PSI				Watt	Max. Media Temp. °F	Seal	Pressure Vessel Number	Reference	
			Min.	Air, Inert Gas	Water	Light Oil					Coil	Valve
AC TECHNICAL SPECIFICATIONS												
1/8	3/64	0.05	0	750	750	750	10	165	PCTFE	71225SN1EF00	7	A12
1/8	3/64	0.05	0	400	400	400	10	185	NBR	71295SN1ENJ1	7	A11
1/8	1/16	0.11	0	400	400	400	10	165	PCTFE	71225SN1GF00	7	A12
1/8	1/16	0.11	0	325	325	325	10	185	NBR	71295SN1GNJ1	7	A11
1/8	3/32	0.15	0	250	250	250	10	185	NBR	71295SN1KNJ1	7	A11
1/8	3/32	0.15	0	170	170	170	10	165	PCTFE	71225SN1KF00	7	A12
1/4	3/64	0.05	0	750	750	750	10	165	PCTFE	71225SN2EF00	7	A12
1/4	3/64	0.05	0	400	400	400	10	185	NBR	71295SN2ENJ1	7	A11
1/4	1/16	0.11	0	400	400	400	10	165	PCTFE	71225SN2GF00	7	A12
1/4	1/16	0.11	0	325	325	325	10	185	NBR	71295SN2GNJ1	7	A11
1/4	3/32	0.15	0	250	250	250	10	185	NBR	71295SN2KNJ1	7	A11
1/4	3/32	0.15	0	170	170	170	10	165	PCTFE	71225SN2KF00	7	A12
DC TECHNICAL SPECIFICATIONS												
1/8	3/64	0.05	0	750	750	750	10	165	PCTFE	71225SN1EF00	7	A12
1/8	3/64	0.05	0	400	400	400	10	185	NBR	71295SN1ENJ1	7	A11
1/8	1/16	0.11	0	400	400	400	10	165	PCTFE	71225SN1GF00	7	A12
1/8	1/16	0.11	0	325	325	325	10	185	NBR	71295SN1GNJ1	7	A11
1/8	3/32	0.15	0	250	250	250	10	185	NBR	71295SN1KNJ1	7	A11
1/8	3/32	0.15	0	170	170	170	10	165	PCTFE	71225SN1KF00	7	A12
1/4	3/64	0.05	0	750	750	750	10	165	PCTFE	71225SN2EF00	7	A12
1/4	3/64	0.05	0	400	400	400	10	185	NBR	71295SN2ENJ1	7	A11
1/4	1/16	0.11	0	400	400	400	10	165	PCTFE	71225SN2GF00	7	A12
1/4	1/16	0.11	0	325	325	325	10	185	NBR	71295SN2GNJ1	7	A11
1/4	3/32	0.15	0	250	250	250	10	185	NBR	71295SN2KNJ1	7	A11
1/4	3/32	0.15	0	170	170	170	10	165	PCTFE	71225SN2KF00	7	A12

www.comoso.com

2-Way Direct Acting - Bi-Directional* - Stainless Steel

Port Size NPT	Orifice Size in.	Flow Factor Cv	Operating Pressure Differential (MOPD) PSI				Watt	Max. Media Temp. °F	Seal	Pressure Vessel Number	Reference	
			Min.	Air, Inert Gas	Water	Light Oil					Coil	Valve
AC TECHNICAL SPECIFICATIONS												
1/4	1/32	0.02	0	400	400	400	10	185	NBR	71235SN2AN00	7	A19
1/4	3/64	0.06	0	180	180	180	10	185	NBR	71235SN2EN00	7	A19
1/4	1/16	0.10	0	110	110	110	10	185	NBR	71235SN2GN00	7	A19
1/4	3/32	0.17	0	70	70	70	10	185	NBR	71235SN2KN00	7	A19
1/4	1/8	0.28	0	45	45	45	10	185	NBR	71235SN2MN00	7	A19
DC TECHNICAL SPECIFICATIONS												
1/4	1/32	0.02	0	400	400	400	10	185	NBR	71235SN2AN00	7	A19
1/4	3/64	0.06	0	180	180	180	10	185	NBR	71235SN2EN00	7	A19
1/4	1/16	0.10	0	110	110	110	10	185	NBR	71235SN2GN00	7	A19
1/4	3/32	0.17	0	70	70	70	10	185	NBR	71235SN2KN00	7	A19
1/4	1/8	0.28	0	45	45	45	10	185	NBR	71235SN2MN00	7	A19

*Pressure can be applied to either inlet or outlet.

Parker Hannifin Corporation
Fluid Control Division
1 800 825 8305 (1 800 Valve05)
www.parker.com/fcd

www.comoso.com

Valve Reference A3

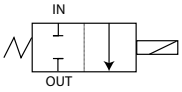

2-Way Normally Closed:
Port Identification:
In-In/Out-Out

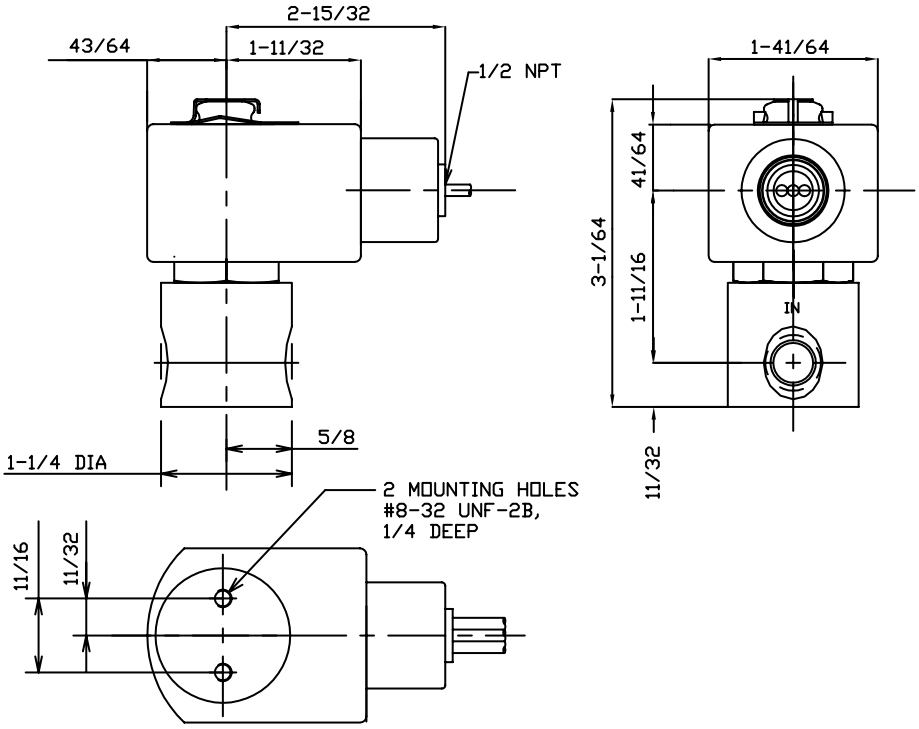

Valve Reference A4

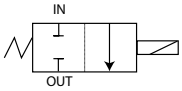

2-Way Normally Closed:
Port Identification:
In-In/Out-Out

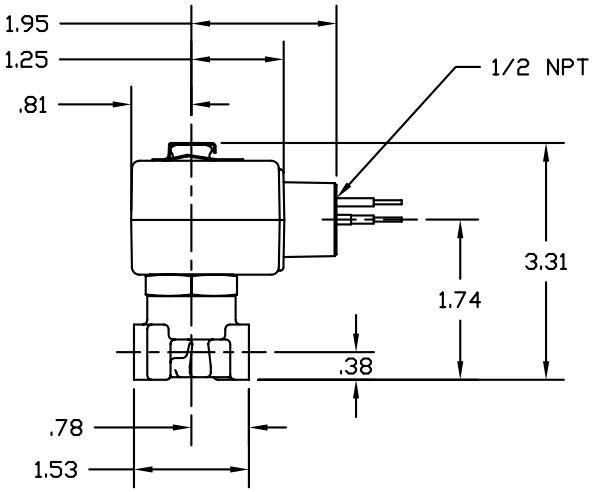

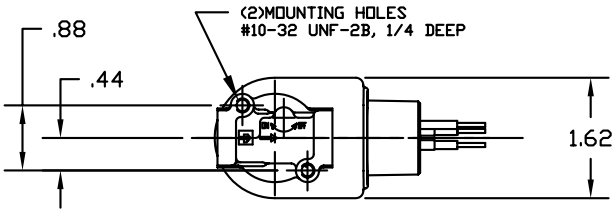

Valve Reference A5

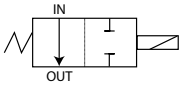

2-Way Normally Open
Port Identification:
In-In/Out-Out

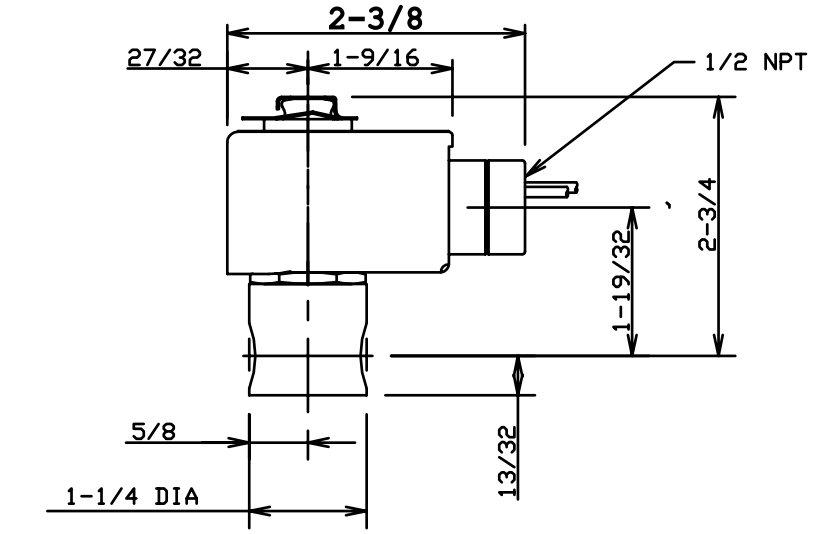

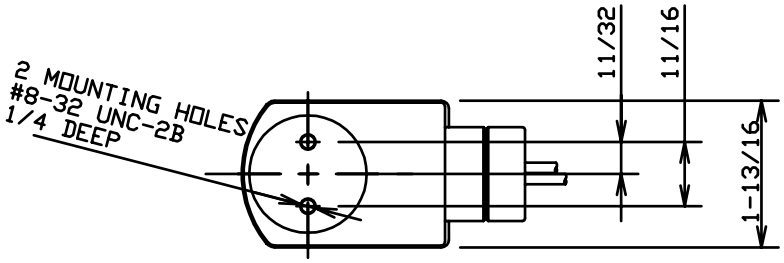

Valve Reference A6

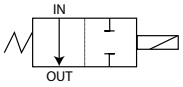

2-Way Normally Open
Port Identification:
In-In/Out-Out

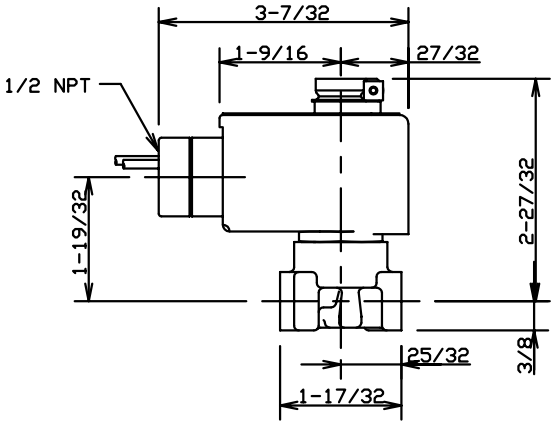

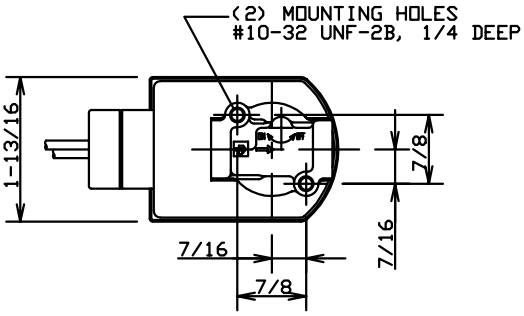

Parker Hannifin Corporation
Fluid Control Division
1 800 825 8305 (1 800 Valve05)
www.parker.com/fcd

www.comoso.com

Valve Reference A7

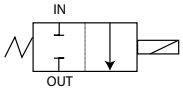

2-Way Normally Closed
Port Identification:
In-In/Out-Out

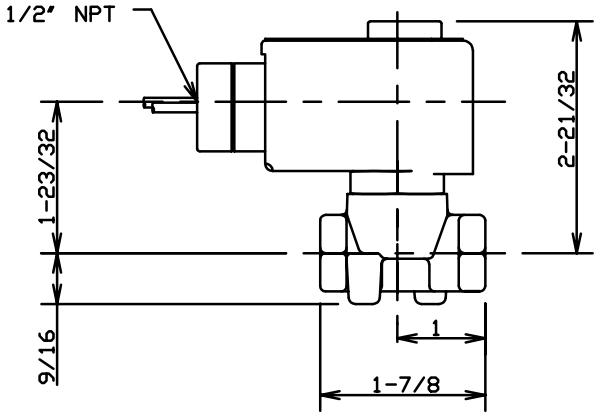

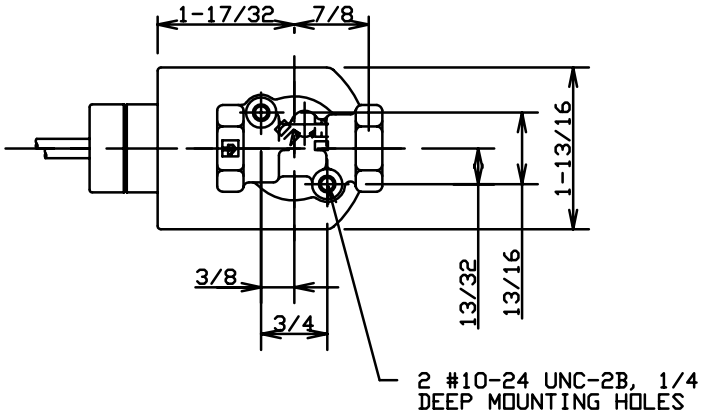

Valve Reference A8

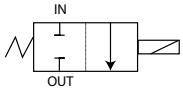

2-Way Normally Closed
Port Identification:
In-In/Out-Out

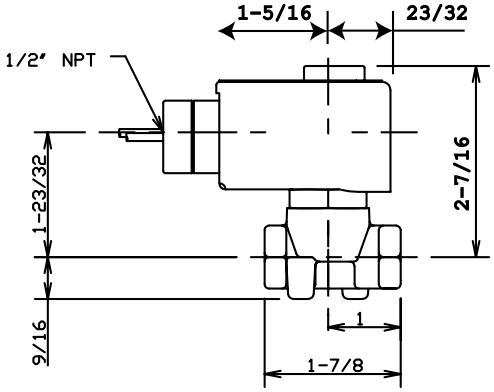

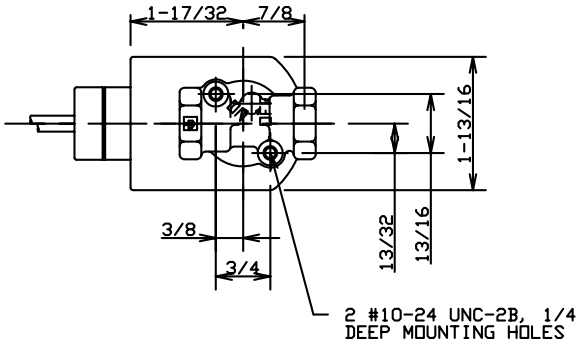

www.comoso.com

Valve Reference A9

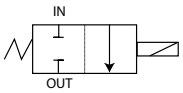

2-Way Normally Closed
Port Identification:
In-In/Out-Out

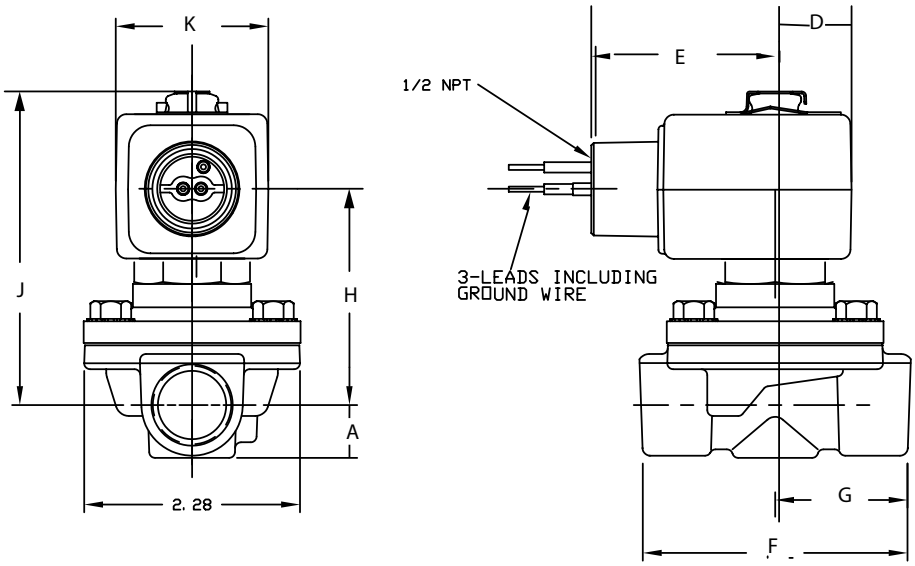

Part Number	Dimensions							
	A	D	E	F	G	H	J	K
08F20C2128AAF	9/16	23/32	1 - 25/32	2 - 13/16	1-13/32	1-15/16	2-25/32	1-9/16
08F20C2128ADF **08F20C2128A3F**	9/16	7/8	1 - 15/16	2 - 13/16	1-13/32	2-1/4	3-9/32	1-13/16
12F20C2148ADF	11/16	7/8	1 - 15/16	2 - 29/32	1-15/32	2-11/32	3-3/8	1-13/16

Valve Reference A10

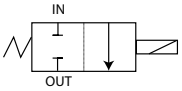

2-Way Normally Closed
Port Identification:
2-IN / 1-OUT

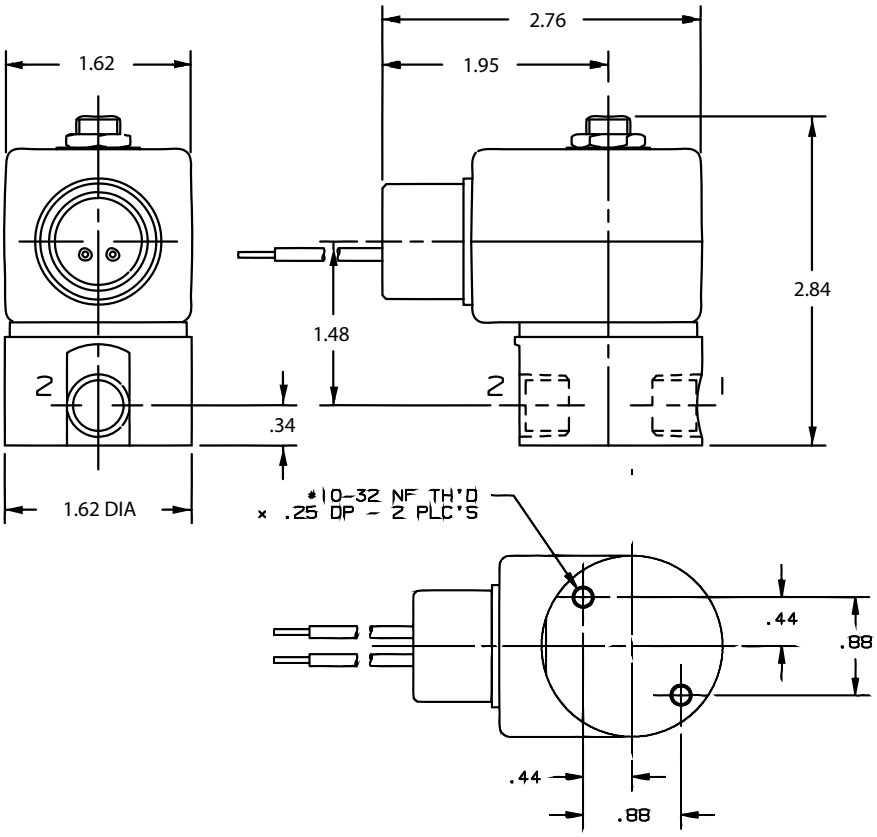

Parker Hannifin Corporation
Fluid Control Division
1 800 825 8305 (1 800 Valve05)
www.parker.com/fcd

www.comoso.com

Valve Reference A11

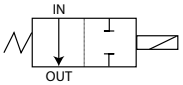

2-Way Normally Open
Port Identification:
2-IN / 3-OUT

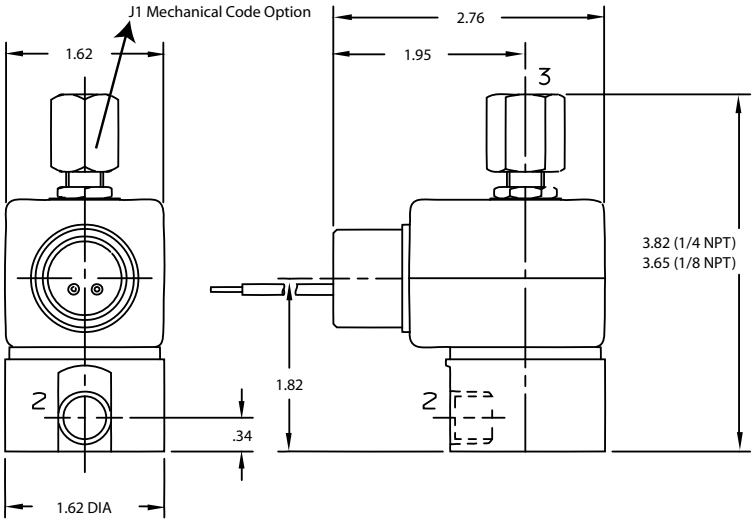

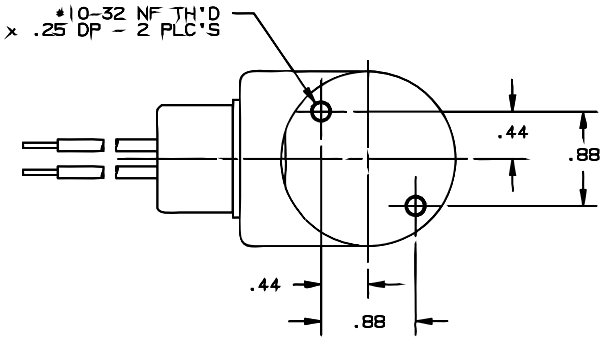

Valve Reference A12

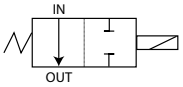

2-Way Normally Open
Port Identification:
1-OUT / 2-IN

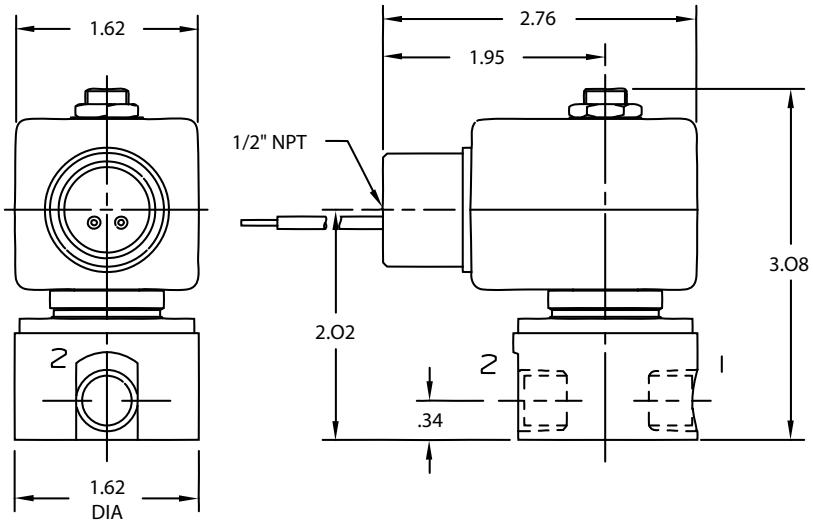

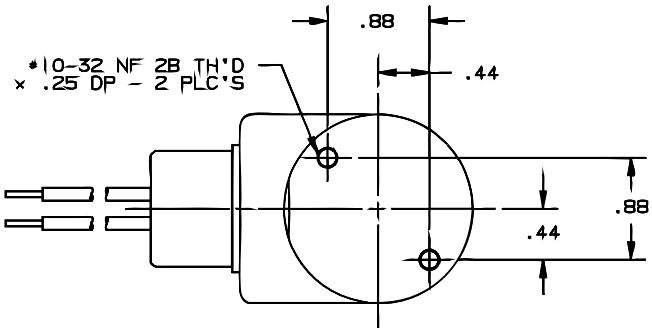

Valve Reference A13

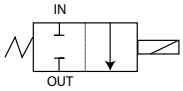

2-Way Normally Closed
7121KBN
Port Identification:
1-IN / 2-OUT

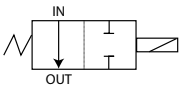

2-Way Normally Open
7122KBN
Port Identification:
1-IN / 2-OUT

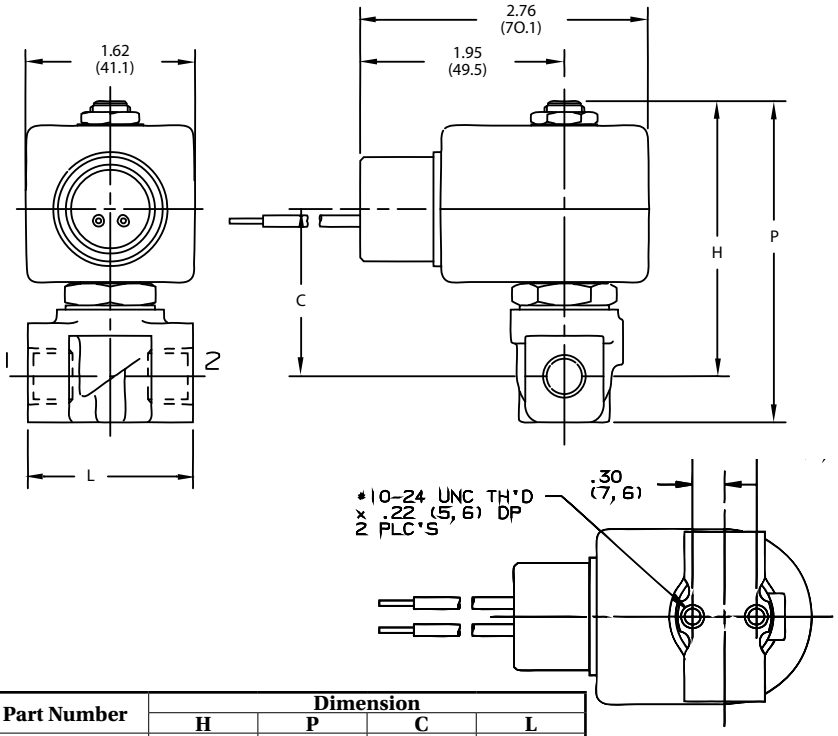

Part Number	Dimension			
	H	P	C	L
7121KBN1XXXX 7121KBN2XXXX 7122KBN1XXXX 7122KBN2XXXX	2.63	3.07	1.61	1.57
7121KBN3XXXX	2.57	3.08	1.55	1.97

Valve Reference A14

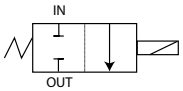

2-Way Normally Closed
Port Identification:
Flow arrow on body
indicates flow direction.
Ports are not marked.

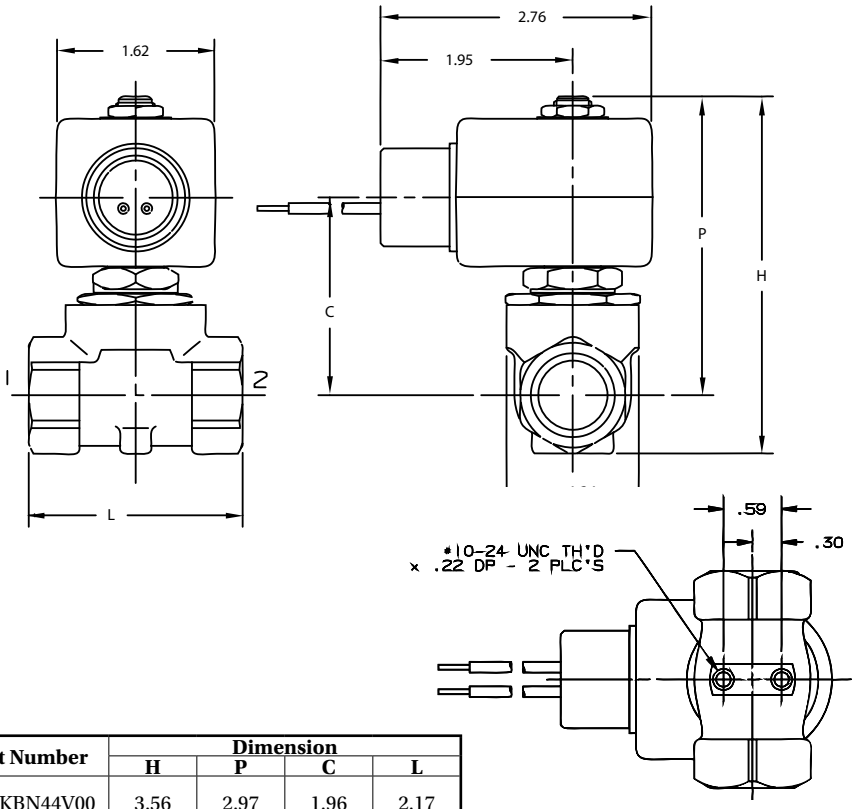

Part Number	Dimension			
	H	P	C	L
7121KBN44V00	3.56	2.97	1.96	2.17

Parker Hannifin Corporation
Fluid Control Division
1 800 825 8305 (1 800 Valve05)
www.parker.com/fcd

www.comoso.com

Valve Reference A15

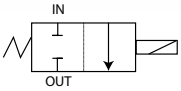

2-Way Normally Closed
Port Identification:
2-IN / 1-OUT

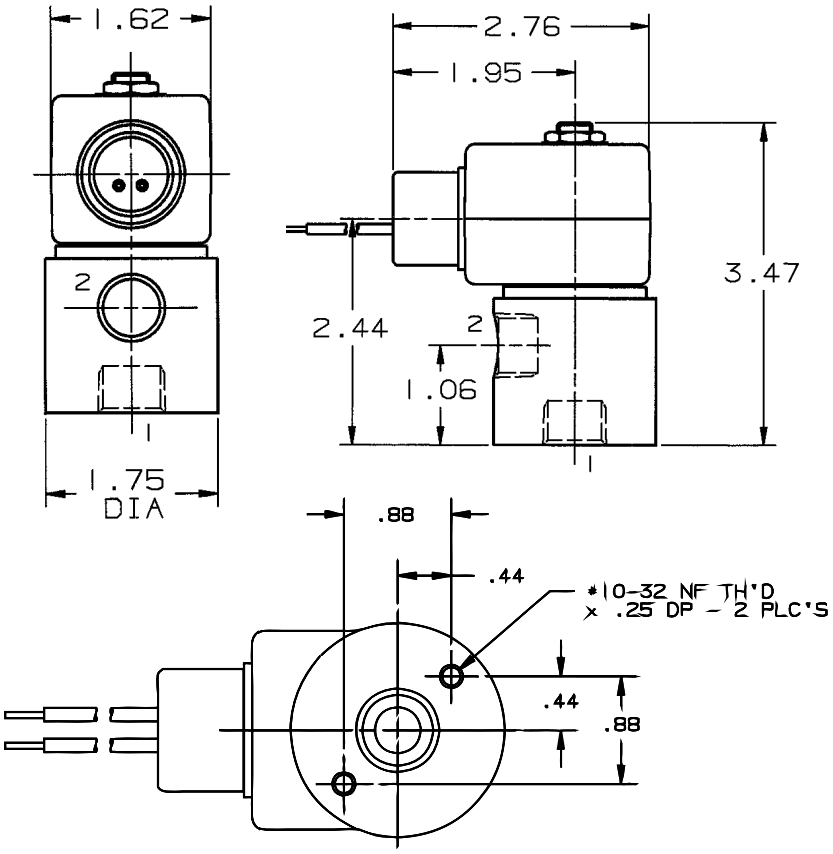

Valve Reference A16

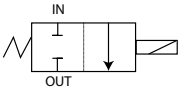

2-Way Normally Closed
Port Identification:
IN-IN / OUT-OUT

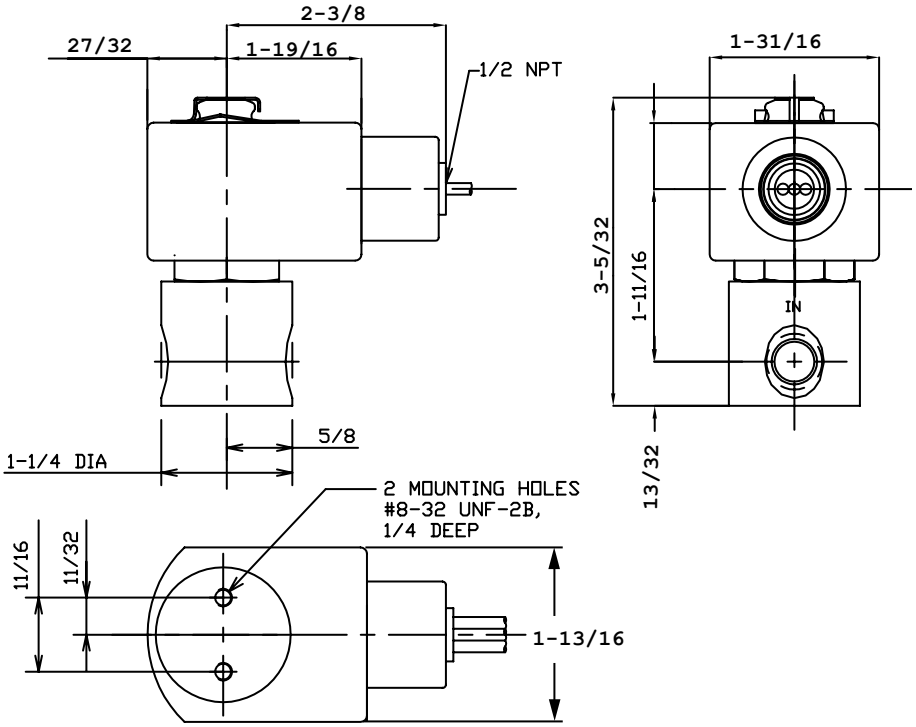

Valve Reference A17

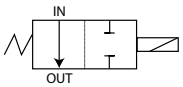

2-Way Normally Open
Port Identification:
IN-IN/OUT-OUT

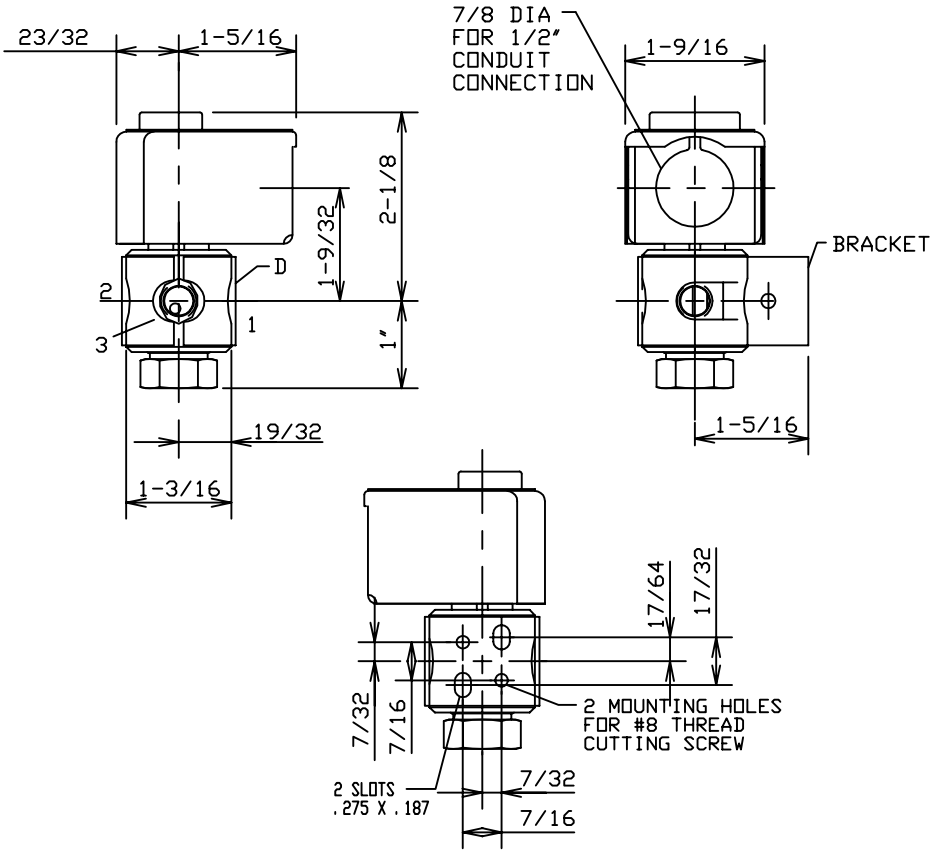

Valve Reference A18

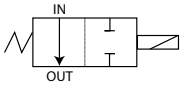

2-Way Normally Open
Port Identification:
IN-IN/OUT-OUT

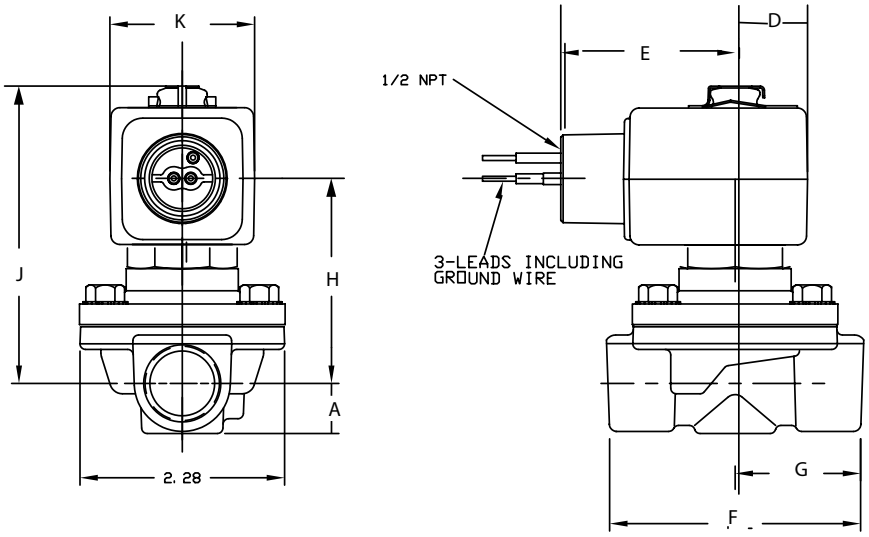

Dimensions							
A	D	E	F	G	H	J	K
9/16	7/8	1 - 15/16	2 - 13/16	1- 13/32	2- 1/8	3 - 9/32	1 - 13/16
11/16	7/8	1 - 15/16	2 - 29/32	1 - 15/32	2 - 7/32	3 - 3/8	1 - 13/16

Parker Hannifin Corporation
Fluid Control Division
1 800 825 8305 (1 800 Valve05)
www.parker.com/fcd

www.comoso.com

Valve Reference A19

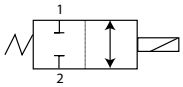

2-Way Bi-Directional
Port Identification:
Pressure can be applied
to either port.

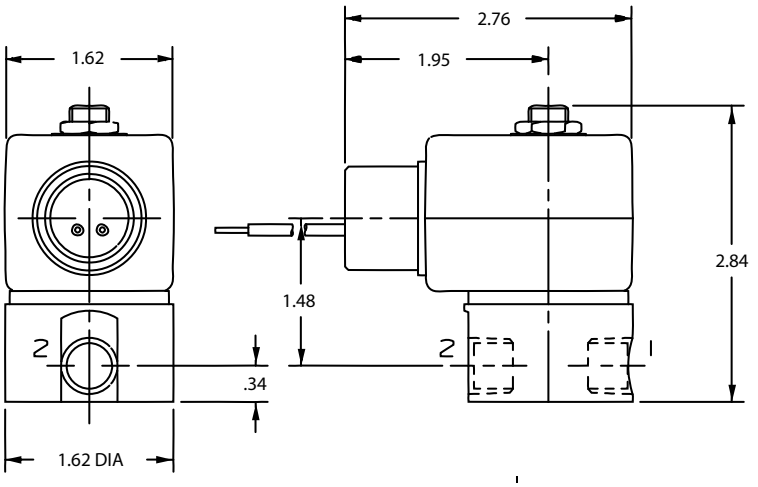

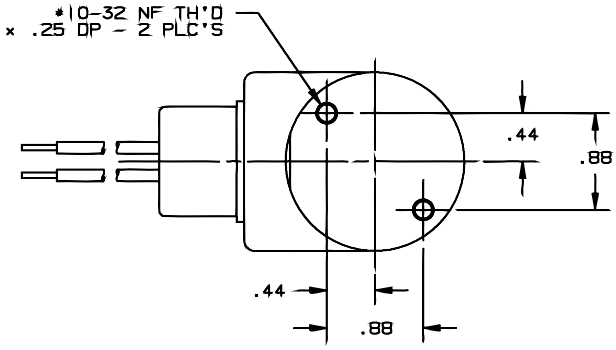

Valve Reference A20

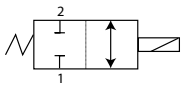

2-Way Normally Closed
Port Identification:
2 IN/1 OUT

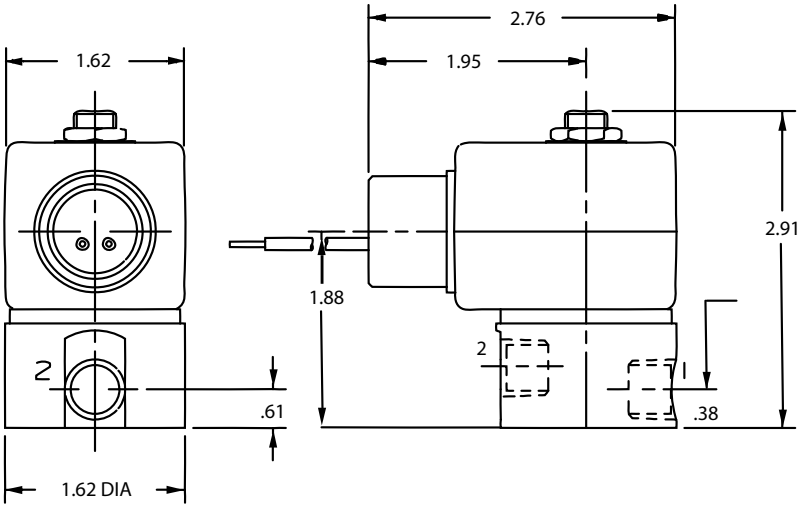

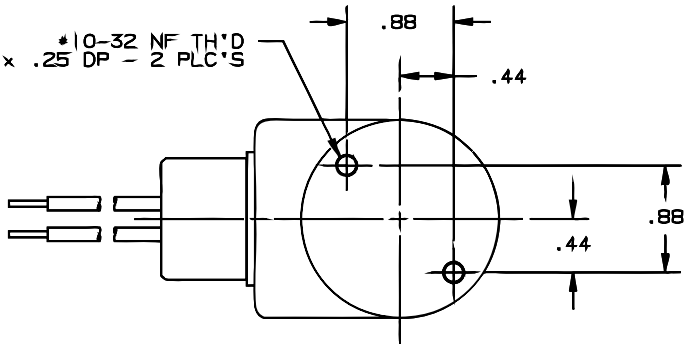

www.comoso.com

2-Way Direct Acting Materials of Construction**

Product*	Wattage	Type	Port Size	Body	Sleeve Tube	Sleeve Stop	Sleeve Flange	"Plunger Blank"	Plunger Spring	Shading Ring	Max. Ambient Temp.
02F20O1	6	2WNO	1/8	Brass	305SS	430FR	12L14 Plated	430FR	17-7PH	Copper	130°F
02F20O1	9.5, 10	2WNO	1/8	Brass	305SS	430FR	12L14 Plated	430FR	17-7PH	Copper	77°F
04F20C1	6, 11	2WNC	1/4	Brass	305SS	430FR	12L14 Plated	430FR	17-7PH	Copper	130°F
04F20C1	9.5, 10, 16	2WNC	1/4	Brass	305SS	430FR	12L14 Plated	430FR	17-7PH	Copper	77°F
04F20C2	6, 11	2WNC	1/4	Brass	305SS	430FR	12L14 Plated	430FR	17-7PH	Copper	130°F
04F20C2	9.5, 10, 16	2WNC	1/4	Brass	305SS	430FR	12L14 Plated	430FR	17-7PH	Copper	77°F
04F20O1	6, 11	2WNO	1/4	Brass	305SS	430FR	12L14 Plated	430FR	17-7PH	Copper	130°F
04F20O1	9.5, 10, 16	2WNO	1/4	Brass	305SS	430FR	12L14 Plated	430FR	17-7PH	Copper	77°F
04F20O2	6, 11	2WNC	1/4	Brass	305SS	430FR	12L14 Plated	430FR	17-7PH	Copper	130°F
04F20O2	9.5, 10, 16	2WNC	1/4	Brass	305SS	430FR	12L14 Plated	430FR	17-7PH	Copper	77°F
06F20C2	6, 11	2WNC	3/8	Brass	305SS	430FR	12L14 Plated	430FR	17-7PH	Copper	130°F
06F20C2	9.5, 10, 16	2WNC	3/8	Brass	305SS	430FR	12L14 Plated	430FR	17-7PH	Copper	77°F
08F20C2	6, 11	2WNC	1/2	Brass	305SS	430FR	12L14 Plated	430FR	17-7PH	Copper	130°F
08F20C2	9.5, 10, 16	2WNC	1/2	Brass	305SS	430FR	12L14 Plated	430FR	17-7PH	Copper	77°F
08F20O2	6, 11	2WNO	1/2	Brass	305SS	430FR	12L14 Plated	430FR	17-7PH	Copper	130°F
08F20O2	9.5, 10, 16	2WNO	1/2	Brass	305SS	430FR	12L14 Plated	430FR	17-7PH	Copper	77°F
12F20C2	6, 11	2WNC	3/4	Brass	305SS	430FR	12L14 Plated	430FR	17-7PH	Copper	130°F
12F20C2	9.5, 10, 16	2WNC	3/4	Brass	305SS	430FR	12L14 Plated	430FR	17-7PH	Copper	77°F
12F20O2	6, 11	2WNO	3/4	Brass	305SS	430FR	12L14 Plated	430FR	17-7PH	Copper	130°F
12F20O2	3, 9.5, 10, 16	2WNO	3/4	Brass	305SS	430FR	12L14 Plated	430FR	17-7PH	Copper	77°F

* Shows the first 7 digits of pressure vessel part number.
**Maximum ambient temperature shown is the rating when valve is operating at the maximum fluid temperature as shown in the product sections for each of the valves in this catalog

Parker Hannifin Corporation
Fluid Control Division
1 800 825 8305 (1 800 Valve05)
www.parker.com/fcd

www.comoso.com

2-Way Direct Acting Materials of Construction (Continued)**

Product*	Wattage	Type	Port Size	Body	Sleeve Tube	Sleeve Stop	Sleeve Flange	"Plunger Blank"	Plunger Spring	Shading Ring	Max. Ambient Temp.
71215SN	10	2WNC	1/8 - 3/8	430F	304SS	430FR	430F	430FR	18-8SS	Copper	150°F
71215SN	22	2WNC	1/8 - 3/8	430F	304SS	430FR	430F	430FR	18-8SS	Copper	77°F
71216SN	10	2WNC	1/8 - 1/4	430F	304SS	430FR	430F	430FR	18-8SS	Copper	150°F
71216SN	22	2WNC	1/8 - 1/4	430F	304SS	430FR	430F	430FR	18-8SS	Copper	77°F
7121KBN	10	2WNC	1/8 - 3/8	Brass	304SS	430FR	430F	430FR	18-8SS	Copper	150°F
7121KBN	22	2WNC	1/8 - 3/8	Brass	304SS	430FR	430F	430FR	18-8SS	Copper	77°F
71225SN	10	2WNO	1/8 - 1/4	430F	304SS	430FR	430F	430FR	18-8SS	Copper	150°F
71225SN	22	2WNO	1/8 - 1/4	430F	304SS	430FR	430F	430FR	18-8SS	Copper	77°F
7122KBN	10	2WNO	1/8 - 1/4	Brass	304SS	430FR	430F	430FR/4106	301SS	Copper	150°F
7122KBN	22	2WNO	1/8 - 1/4	Brass	304SS	430FR	430F	430FR/4106	301SS	Copper	77°F
71235SN	10	2WDP	1/4	430F	304SS	430FR	430F	430FR	18-8SS	Copper	150°F
71235SN	22	2WDP	1/4	430F	304SS	430FR	430F	430FR	18-8SS	Copper	77°F
71295SN	10	2WNO	1/8 - 1/4	430F	304SS	430FR	430F	430FR	18-8SS	Copper	150°F
71295SN	22	2WNO	1/8 - 1/4	430F	304SS	430FR	430F	430FR	18-8SS	Copper	77°F

* Shows the first 7 digits of pressure vessel part number.

** Maximum ambient temperature shown is the rating when valve is operating at the maximum fluid temperature as shown in the product sections for each of the valves in this catalog.

www.comoso.com

Notes

Parker Hannifin Corporation
Fluid Control Division
1 800 825 8305 (1 800 Valve05)
www.parker.com/fcd

www.comoso.com