A

Application

Series D31 hydraulic directional control valves are high performance, solenoid controlled, pilot operated, 2-stage 4-way valves. They are available in 2 or 3-position styles and are manifold mounted. These valves conform to NFPA's D05H, CETOP 5 and can also be manufactured to an NFPA DO5HE, CETOP 5H configuration.

Operation

Series D31 directional valves consist of a 5-chamber style main body, a case hardened sliding spool, and a pilot valve or pilot operators (hydraulic or pneumatic).

Features

- Easy access mounting bolts.
- 345 Bar (5000 PSI) pressure rating.
- Flows to 175 LPM (45 GPM) depending on spool.
- Choice of four operator styles.
- Rugged four land spools.
- Low pressure drop.
- Phosphate finish.
- Both NFPA and CETOP mounting styles available.

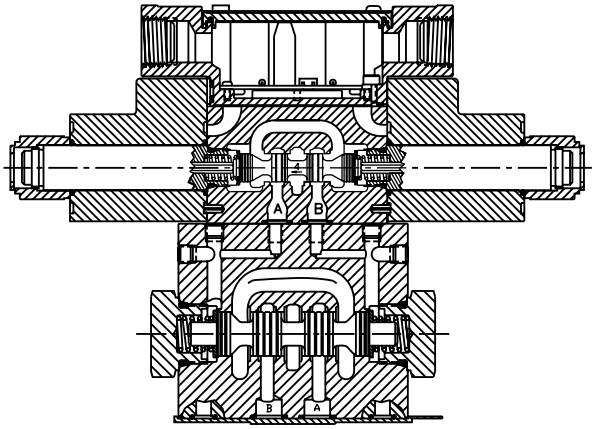

D31*W Solenoid Operated Plug-In Conduit Box

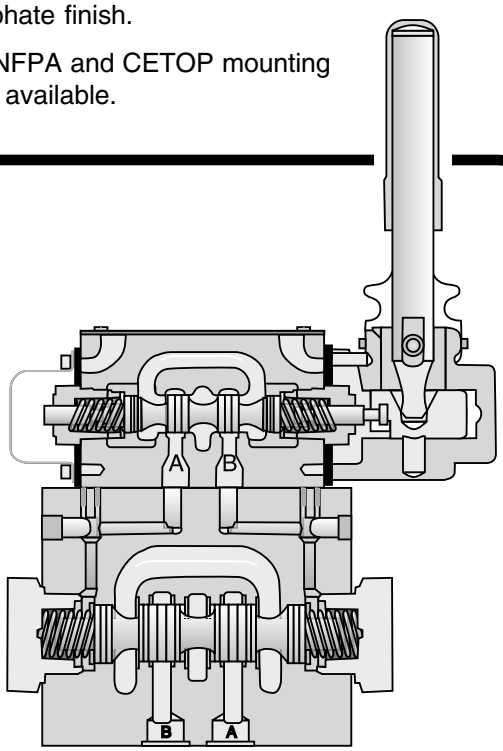

D31*L Lever Operated

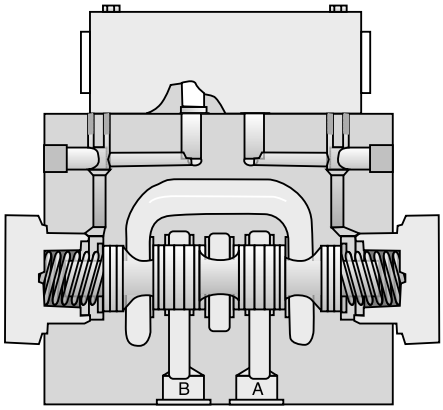

D3*P Oil Pilot Operated

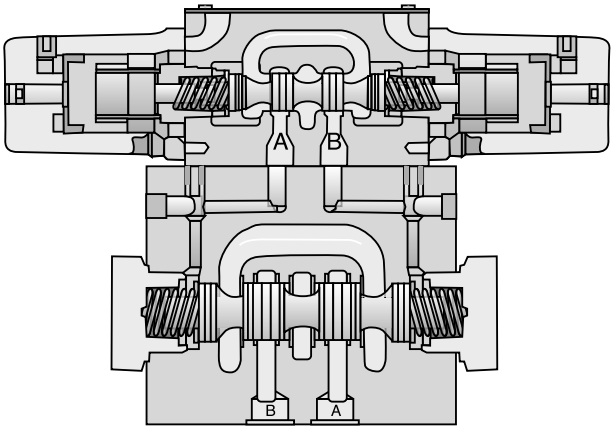

D31*A Air Pilot Operated

2502-A3.p65, dd

Parker Hannifin Corporation
Hydraulic Valve Division
Elyria, Ohio, USA

A

General Description

Series D31*W directional control valves are 5-chamber, pilot operated, solenoid controlled valves. The valves are suitable for manifold or subplate mounting.

Features

- **World design –** Available worldwide.
- **Mounting bolts below center line of spool –** Minimizes spool binding.
- **Five chamber style –** Eliminates pressure spikes in tubes, increasing valve life.
- **High pressure and flow ratings –** Increased performance options in a compact valve.

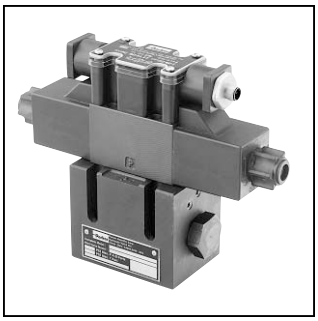

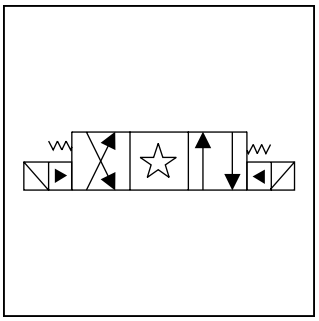

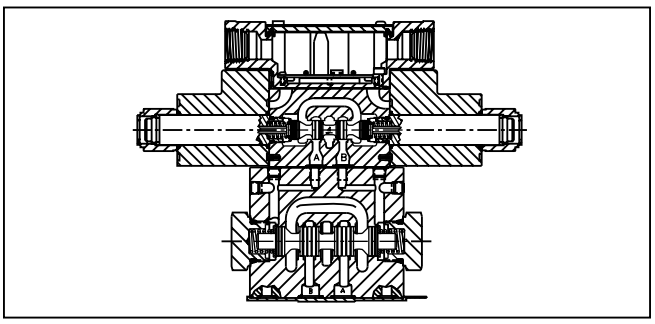

Specifications

Mounting Pattern	NFPA D05H, CETOP 5 NFPA D05HE, CETOP 5H
Max. Operating Pressure	345 Bar (5000 PSI) Standard CSA 207 Bar (3000 PSI)
Max. Tank Line Pressure	Internal Drain Model: 103 Bar (1500 PSI) AC Std. 207 Bar (3000 PSI) DC Std./AC Opt. External Drain Model: 207 Bar (3000 PSI) CSA 103 Bar (1500 PSI)
Max. Drain Pressure	103 Bar (1500 PSI) AC only 207 Bar (3000 PSI) DC Std./AC Opt. CSA 103 Bar (1500 PSI)
Min. Pilot Pressure	6.9 Bar (100 PSI)
Max. Pilot Pressure	345 Bar (5000 PSI) Standard CSA 207 Bar (3000 PSI)
Nominal Flow	76 Liters/Min (20 GPM)
Maximum Flow	See Switching Limit Charts

Response Time

Response time (milliseconds)
at 345 Bar (5000 PSI) is 76 LPM (20 GPM)

Solenoid Type	Pilot Pressure	Pull-In	Drop-Out
DC	500	40	50
	1000	36	50
	2000	34	50
AC	500	20	33
	1000	18	33
	2000	13	33

Switching Limit Charts

For Styles B, C, E, H and K
D Style – external drain only (For internal drain see note below)

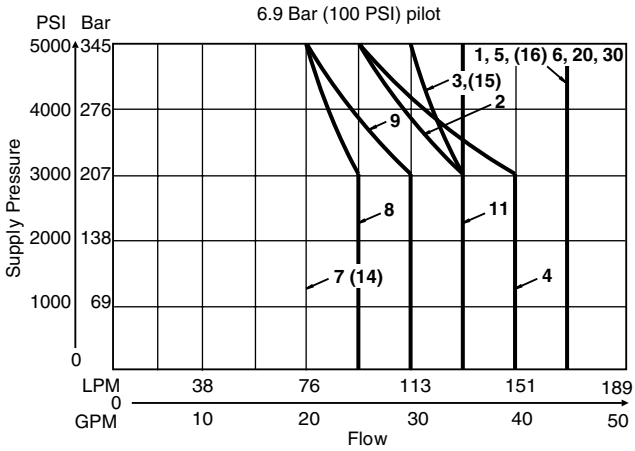

Note: Internal Drain
1, 4 spools – 113 LPM (30 GPM) max., 7 spool – per curve
All others – 95 LPM (25 GPM) max.

For Styles F and M – external drain only
(For internal drain see note below)

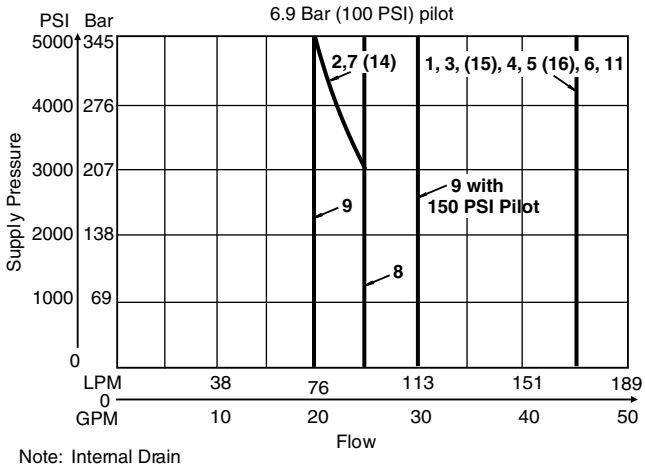

Note: Internal Drain
1, 4 spools – 113 LPM (30 GPM) max., 2, 9 & 14 spools – per curve
All others – 95 LPM (25 GPM) max.

2502-A3.p65, dd

Parker Hannifin Corporation
Hydraulic Valve Division
Elyria, Ohio, USA

A

D							
Directional Control Valve	Basic Valve	Actuator	Spool	Style	Pilot Supply and Drain	Seal	Solenoid Voltage

Code	Description
31D	NFPA D05HE, CETOP 5H, DIN NG10, D03 Pilot, ISO Port
31V	**NFPA D05H, CETOP 5, D03 Pilot, NFPA Port**

Code	Description
W#	**Solenoid, Wet Pin, Screw-in**
HW#	**Reversed Wiring**

Valve schematic symbols are per NFPA/ANSI standards, providing flow P to A when energizing solenoid A. Note operators reverse sides for #008 and #009 spools. See installation information for details. To configure per DIN standards (A coil over A port, B coil over B port) code valves as D31VHW***.

Code	Description
1*	**Internal Pilot, External Drain**
2*	**External Pilot, External Drain**
4#	**Internal Pilot, Internal Drain**
5	**External Pilot, Internal Drain**

* F and M style available only with external drain.
# Not available with 002, 007, 008, 009 or 014 spools.

Code	Description
N	**Nitrile**
V	**Fluorocarbon**

Code	Description
A**	24/50 VAC
D	120 VDC
G	198 VDC
J	**24 VDC**
K	**12 VDC**
N***	220/50 VAC
P***	110/50 VAC
Q**	100/60 VAC
R	24/60 VAC
T	**240/60 - 220/50 VAC**
U	98 VDC
Y	**120/60 - 110/50 VAC**
Z	250 VDC

** High watt only.
*** Explosion proof only.

Code	Symbol	Code	Symbol
001	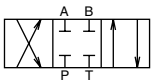	011	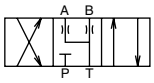
002	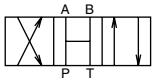	012	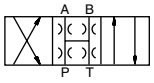
003	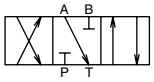	014	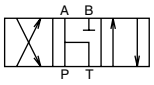
004	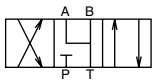	015	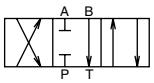
005	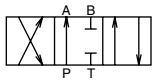	016	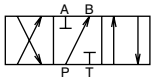
006	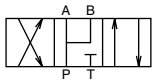	**020***	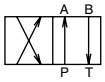
007	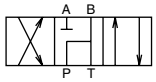	**030****	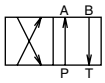
008* **009****	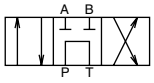	**081**	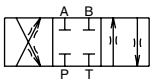
010	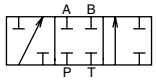	**082**	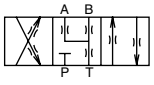

* 008, 020 & 026 spool have closed crossover.
** 009 & 030 spool have open crossover.

Code	Description	Symbol
B*	**Single solenoid, 2 position, spring offset. P to A and B to T in offset position.**	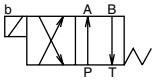
C	**Double solenoid, 3 position, spring centered.**	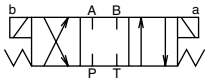
D*	**Double solenoid, 2 position, detent.**	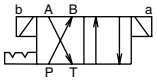
E*	Single solenoid, 2 position, spring centered. P to B and A to T when energized.	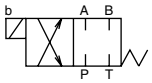
F†	Single solenoid, 2 position, spring offset, energized to center. Spacer on A side. P to A and B to T in offset position.	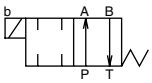
H*	**Single solenoid, 2 position, spring offset. P to B and A to T in offset position.**	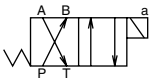
K	Single solenoid, 2 position, spring centered. P to A and B to T when energized.	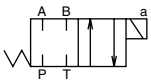
M†	Single solenoid, 2 position, spring offset, energized to center. Spacer on B side. P to B and A to T in offset position.	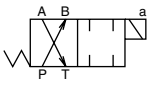

* 020 and 030 spools only.
† High watt only.

Bold: Designates Tier I products and options.

Non-Bold: Designates Tier II products and options. These products will have longer lead times.

2502-A3.p65, dd

Parker Hannifin Corporation
Hydraulic Valve Division
Elyria, Ohio, USA

Solenoid Connection | Coil Options | Tube Options | Manual Override Options | Electrical Options | Shift Response and Indication | Approvals | Valve Variations | Design Series

NOTE: Not required when ordering.

Code	Description
C	**Conduit Box**
D†	Metric Plug (M12X1), DESINA
E*	Explosion Proof
G	**Plug-in**
J†*	Deutsch (DT06-2S)
M†*	Metri-Pack (150)
P	**DIN with Plug**
S†*	Double Spade
W*	**DIN without Plug**

* Not available with lights.
† DC only.

Code	Description
Omit	**Standard**
P*	Extended with Boot
T*	No Override
W*	Waterproof Protection

* Manual override options not available on explosion proof valves.

Code	Description
Omit	**Low Pressure, AC only 103.5 Bar (1500 PSI)**
H	**High Pressure, AC only 207 Bar (3000 PSI)**
G	**Standard Pressure, DC/AC Rectified 207 Bar (3000 PSI)**

Code	Description
Omit	**High Watt**
D*	Explosion Proof, EEXD ATEX
E*	Explosion Proof, EEXME ATEX
F**	Low Watt
C†	CSA Hazardous Location
L***	8 Watt
O*	Explosion Proof, MSHA
U*	Explosion Proof, UL/CSA

* Not available with lights.
** AC only.
*** DC and AC Rectified only.
† Applicable to conduit box and plug-in style only.

Code	Description
Omit	**No Options**
J*	Diode Surge Suppressor
B†	Rectified Coil

* DC only; not applicable with DIN plug with lights.
† DC tube standard.

Code	Description
Omit	**Standard Valve**
3*†	CSA USA (UL 429)
4*	**CSA Canada**

* Not available with AC high pressure tube.
† B, C, H styles only. J, K, Y, U voltages only. C, G, W sol. connections only.

Code	Description
Omit	**Standard Response**
I3*	Monitor Switch Direct Op. End Stroke
I6*	Monitor Switch Direct Op. Start Stroke

* Not available on F or M styles. Spools 8, 9, 81 & 82 not available.
Not CE or CSA approved.

See next page for Valve Variations

Mounting Bolt Kits

UNC Bolt Kits for use with D31*W Directional Control Valves & Manapak/Cartpak

		Number of Manapaks/Cartpaks @ 2.00" (50mm) thickness			
		0	**1**	**2**	**3**
D31*W	Standard:	BK98 1.62"	BK141 3.50"	BK142 5.50"	BK143 7.50"
	Metric:	BKM98 40mm	BKM141 90mm	BKM142 140mm	BKM143 190mm

NOTE: All bolts are SAE grade 8. Standard bolts are 1/4-20 UNCA thread. Metric bolts are M6-1.0 thread. Torque to 16 Nm (12 ft-lbs).

Valve Weight:
Double Solenoid 5.4 kg (12.0 lbs.)
Standard Bolt Kit: BK98
Metric Bolt Kit: BKM98

Bold: Designates Tier I products and options.

Non-Bold: Designates Tier II products and options. These products will have longer lead times.

A

Valve Variations

Code	Description	D31*W	D61*W	D81*W	D101*W
5	**Signal Lights**				
6	**Manaplug – Brad Harrison Mini**				
56	**Manaplug (Mini) with Lights**				
7A	Manaplug – Brad Harrison (12x1) Micro				
7B	Manaplug (Micro) with Lights (D1 only)				
20	**Fast Response**				
1A	**Manaplug (Mini) Single Sol. 5-pin**				
1B	Manaplug (Micro) Single Sol. 5-pin				
1C	**Manaplug (Mini) Single Sol. 5-pin, with Lights**				
1D	Manaplug (Micro) Single Sol. 5-pin, with Lights				
1E	Manaplug (Mini) Single Sol. 5-pin, with Stroke Adjust “A” & “B” End				
1F	Manaplug (Micro) Single Sol. 5-pin, with Stroke Adjust “A” & “B” End				
1G	Manaplug (Mini) Single Sol. 5-pin, with Stroke Adjust “A” & “B” End and Lights				
1H	Manaplug (Micro) Single Sol. 5-pin, with Stroke Adjust “A” & “B” End and Lights				
1M	Manaplug Opposite of Normal				
1P	Painted Body				
3A	**Pilot Choke Meter Out**				
3B	**Pilot Choke Meter In**				
3C	**Pilot Pressure Reducer**				
3D	Stroke Adjust “B” End				
3E	Stroke Adjust “A” End				
3F	Stroke Adjust “A” & “B” End				
3G	**Pilot Choke Meter Out with Lights**				
3H	**Pilot Choke Meter In with Lights**				
3J	Pilot Pressure Reducer with Lights				
3K	Pilot Choke Meter Out with Stroke Adjust “A” & “B” End				
3L	Pilot Choke Meter Out, Stroke Adjust “A” & “B” End with Lights and Manaplug (Mini)				
3M	Pilot Choke Meter Out, Pilot Pressure Reducer, Stroke Adjust “A” & “B” End				
3R	Pilot Choke Meter Out and Pilot Pressure Reducer				
3S	Pilot Choke Meter Out with Lights and Manaplug (Mini)				
3W	Manaplug (Mini) 5-pin with Stroke Adjust “A” & “B” End and Lights				
4B	Protection Cap for Monitor Switch				
4D*	Twist & Lock Override (Old 5426)				
4E*	Push Manual Override (Old x5450)				

gray = available; white= not available

*DC/AC rectified only. Not available with explosion proof.

A

Solenoid Ratings

Insulation System	Class F
Allowable Deviation from rated voltage	-10% to +15% for DC and AC rectified coils -5% to +5% for AC Coils
Armature	Wet pin type
CSA File Number	LR60407
Environmental Capability	DC Solenoids meet NEMA 4 and IP67 when properly wired and installed. Contact HVD for AC coil applications.

Explosion Proof Solenoid Ratings*

UL & CSA (EU)	Class I, Div 1 & 2, Groups C & D Class II, Div 1 & 2, Groups E, F & G As defined by the NEC
MSHA (EO)	Complies with 30CFR, Part 18
ATEX (ED)	Complies with ATEX requirements for: Exd, Group IIB; EN50014: 1999+ Amds. 1 & 2, EN50018: 2000
CSA Hazardous Location	Class II, Div 1 & 2, Groups E, F & G

* Allowable Voltage Deviation ±10%.
Note that Explosion Proof AC coils are single frequency only.

Code		Voltage	In Rush Amps Amperage	In Rush Amps D31VW VA @ 3MM	Holding Amps D31VW	Watts D31VW	Resistance D31VW
Voltage Code	**Power Code**						
A		24/50 VAC, High Watt	7.00 Amps	168 VA	2.65 Amps	28 W	1.67 ohms
D	**L**	120 VDC	N/A	N/A	0.09 Amps	10 W	1584.00 ohms
			N/A	N/A	0.26 Amps	30 W	528.00 ohms
G	**L**	198 VDC	N/A	N/A	0.05 Amps	10 W	3920.40 ohms
			N/A	N/A	0.15 Amps	30 W	1306.80 ohms
J	**L**	24 VDC	N/A	N/A	0.44 Amps	10 W	51.89 ohms
			N/A	N/A	1.32 Amps	30 W	17.27 ohms
K	**L**	12 VDC	N/A	N/A	0.88 Amps	10 W	12.97 ohms
			N/A	N/A	2.64 Amps	30 W	4.32 ohms
L	**L**	6 VDC	N/A	N/A	1.67 Amps	10 W	3.59 ohms
			N/A	N/A	5.00 Amps	30 W	1.20 ohms
Q		100 VAC / 60 Hz	1.7 Apms	170 VA	0.56 Amps	24 W	26.0 ohms
QD		100 VAC / 60 Hz	0.41 Amps	135 VA	0.41 Amps	18 W	31.2 ohms
QD		100 VAC / 50 Hz	0.57 Amps	150 VA	0.57 Amps	24 W	31.2 ohms
R		24/60 VAC, High Watt	8.00 Amps	192 VA	2.70 Amps	27 W	1.40 ohms
	F	24/60 VAC, Low Watt	6.67 Amps	160 VA	2.20 Amps	23 W	1.52 ohms
T		240/60 VAC, High Watt	0.77 Amps	185 VA	0.26 Amps	25 W	134.50 ohms
		220/50 VAC, High Watt	0.82 Amps	180 VA	0.31 Amps	27 W	134.50 ohms
	F	240/60 VAC, Low Watt	0.70 Amps	168 VA	0.22 Amps	21 W	145.00 ohms
	F	220/50 VAC, Low Watt	0.75 Amps	165 VA	0.26 Amps	23 W	145.00 ohms
U	**L**	98 VDC	N/A	N/A	0.10 Amps	10 W	960.00 ohms
Y		120/60 VAC, High Watt	1.55 Amps	186 VA	0.49 Amps	25 W	33.70 ohms
		110/50 VAC, High Watt	1.65 Amps	182 VA	0.58 Amps	27 W	33.70 ohms
	F	120/60 VAC, Low Watt	1.40 Amps	168 VA	0.42 Amps	21 W	36.50 ohms
	F	110/50 VAC, Low Watt	1.50 Amps	165 VA	0.50 Amps	23 W	36.50 ohms
Z	**L**	250 VDC	N/A	N/A	0.04 Amps	10 W	6875.00 ohms
			N/A	N/A	0.13 Amps	30 W	1889.64 ohms
Explosion Proof Solenoids							
R		24/60 VAC	7.63 Amps	183 VA	2.85 Amps	27 W	1.99 ohms
T		240/60 VAC	0.76 Amps	183 VA	0.29 Amps	27 W	1.34 ohms
N		220/50 VAC	0.77 Amps	169 VA	0.31 Amps	27 W	1.38 ohms
Y		120/60 VAC	1.60 Amps	192 VA	0.58 Amps	27 W	33.50 ohms
P		110/50 VAC	1.47 Amps	162 VA	0.57 Amps	27 W	34.70 ohms
Q		100/60 VAC	1.90 Amps	192 VA	0.70 Amps	27 W	38.60 ohms
K		12 VDC	N/A	N/A	2.75 Amps	33 W	4.36 ohms
J		24 VDC	N/A	N/A	1.38 Amps	33 W	17.33 ohms
D		120 VDC	N/A	N/A	0.28 Amps	33 W	420.92 ohms
Z		250 VDC	N/A	N/A	0.13 Amps	33 W	1952.66 ohms

A

D31*W Series Pressure Drop vs. Flow

The chart below provides the flow vs. pressure drop curve reference for the D31VW Series valves by spool type.

Example:
Find the pressure drop at 76 LPM (20 GPM) for a D31VW with a number 1 spool. To the right of spool number 1, locate the number 3 in the P-A column, and 2 in the B-T column.

Using the graph at the bottom, locate curves 2 and 3 and read the pressure drop values. Total pressure drop through the valve is the sum of the two values.

Note: Pressure drops should be checked for all flow paths, especially when using non-symmetrical spools 003, 005, 007, 014, 015 and 016) and unbalanced actuators.

D31*W Pressure Drop Reference Chart

Spool No.	Curve Number										
	Shifted				Center Condition						
	P-A	P-B	B-T	A-T	(P-T)	(B-A)	(A-B)	(P-A)	(P-B)	(A-T)	(B-T)
001	3	3	2	1	-	-	-	-	-	-	-
002	3	3	1	1	3	3	3	4	4	1	1
003	3	3	1	1	-	-	-	-	-	3	-
004	3	3	1	1	-	-	-	-	-	1	1
005	3	3	1	1	-	-	-	5	-	-	-
006	3	3	1	1	-	5	7	6	5	-	-
007	4	2	1	1	4	-	-	-	3	-	2
009	3	3	1	1	7	-	-	-	-	-	-
010	3	2	-	-	-	-	-	-	-	-	-
011	3	2	1	1	-	-	-	-	-	8	8
014	2	4	1	1	4	-	-	4	-	2	-
015	3	2	4	1	-	-	-	-	-	-	4
016	5	2	1	1	-	-	-	-	5	-	-
020	5	4		2	2	-	-	-	-	-	-
030	4	3		1	1	-	-	-	-	-	-

Viscosity Correction Factor

Viscosity (SSU)	75	150	200	250	300	350	400
% of ΔP (Approx.)	93	111	119	126	132	137	141

Curves were generated using 110 SSU hydraulic oil.
For any other viscosity, pressure drop will change per chart.

Pressure Drop Chart

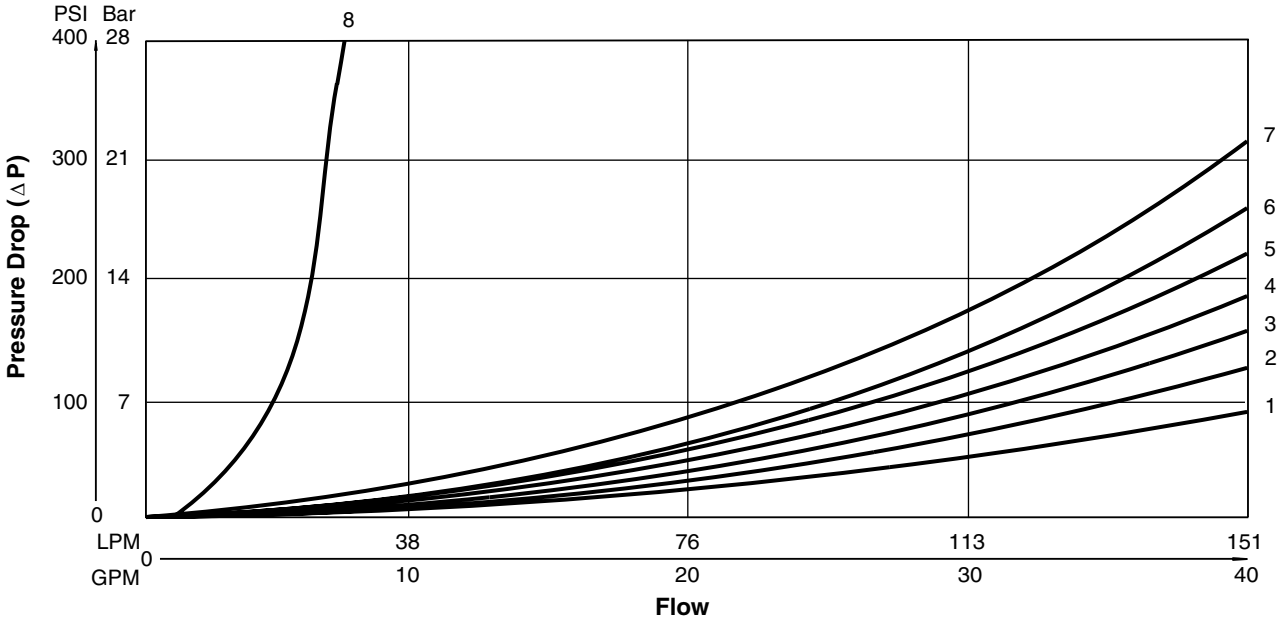

Inch equivalents for millimeter dimensions are shown in (**)

Conduit Box, Double AC Solenoid

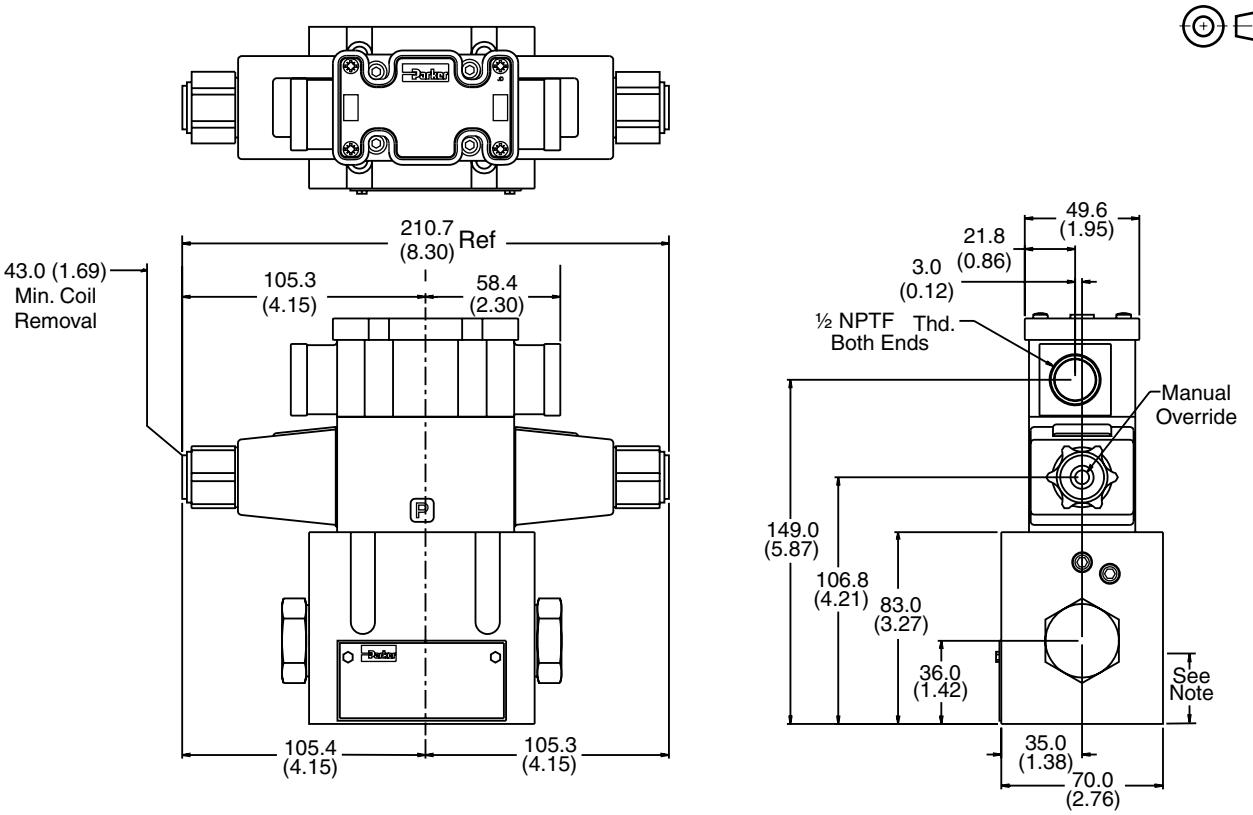

Note: 30.0mm (1.18") from bottom of bolt hole counterbore to bottom of valve.

Conduit Box and Stroke Adjust, Double AC Solenoid

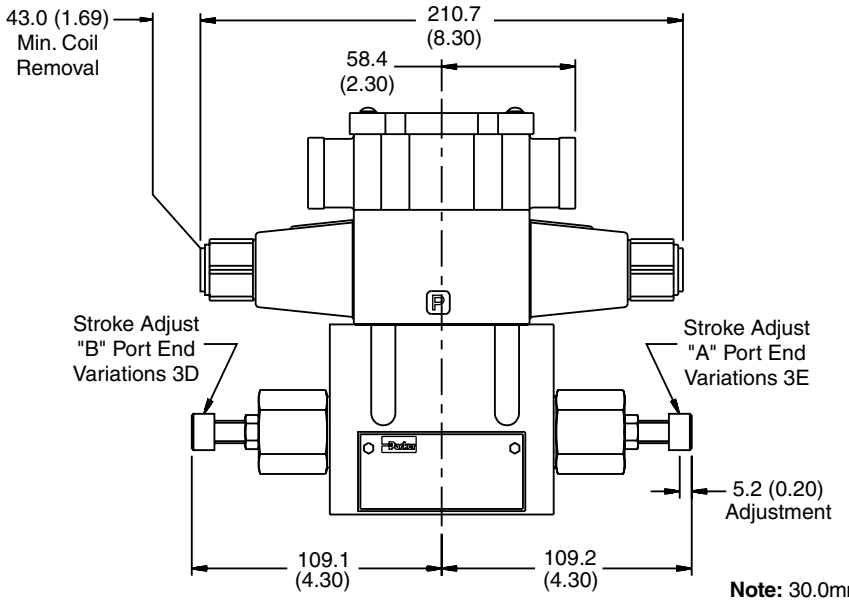

Note: 30.0mm (1.18") from bottom of bolt hole counterbore to bottom of valve.

2502-A3.p65, dd

Parker Hannifin Corporation
Hydraulic Valve Division
Elyria, Ohio, USA

Inch equivalents for millimeter dimensions are shown in (**)

A

Conduit Box and Pilot Choke Control, Double AC Solenoid

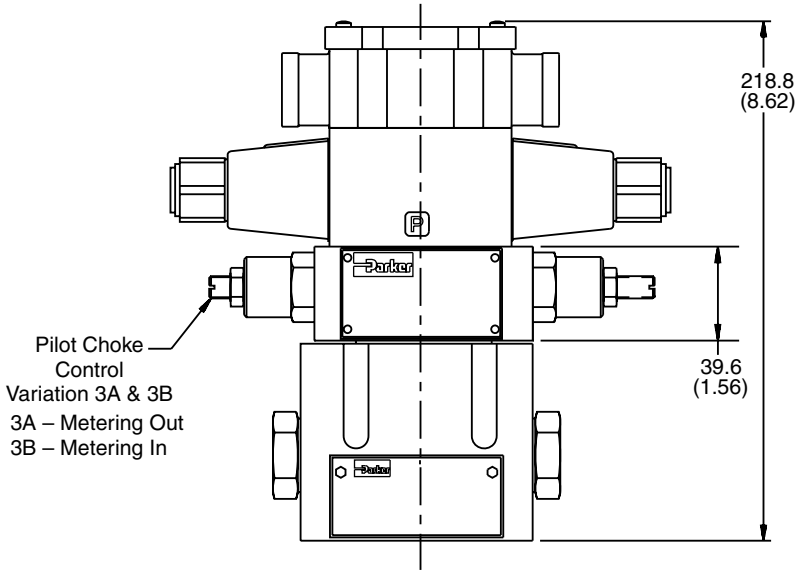

Note: 30.0mm (1.18") from bottom of bolt hole counterbore to bottom of valve.

Conduit Box, Single AC Solenoid

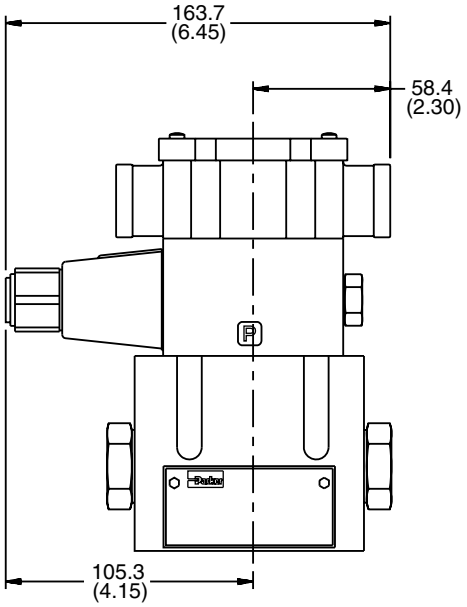

Note: 30.0mm (1.18") from bottom of bolt hole counterbore to bottom of valve.

Inch equivalents for millimeter dimensions are shown in (**)

Hirschmann and Stroke Adjust, Double DC Solenoid

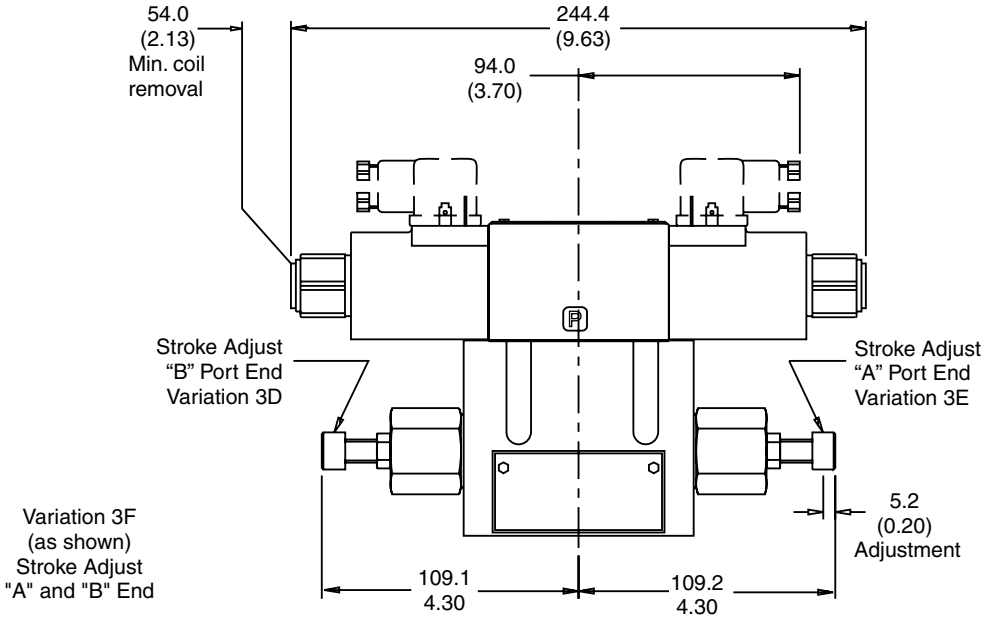

Note: 30.0mm (1.18") from bottom of bolt hole counterbore to bottom of valve.

Hirschmann and Pilot Choke Control, Double DC Solenoid

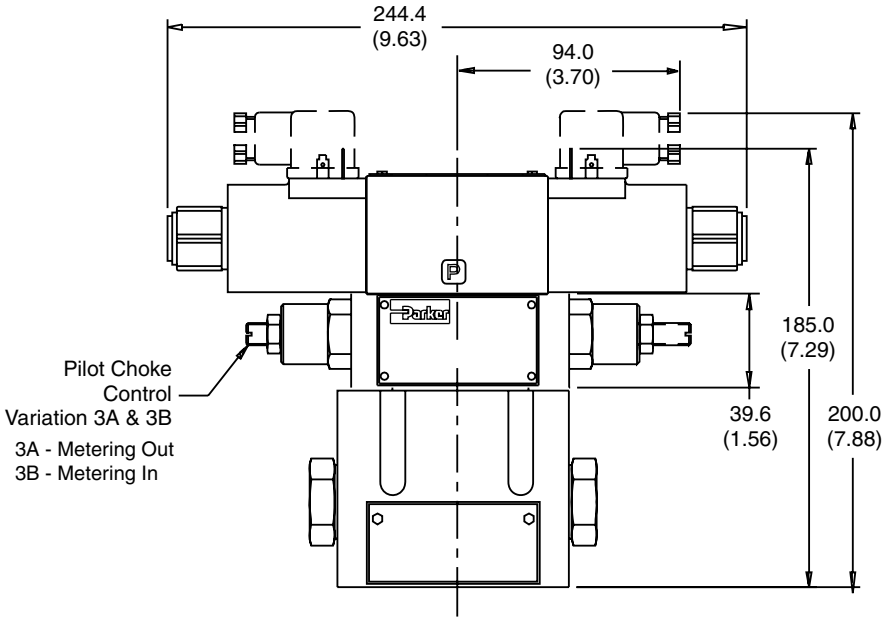

Note: 30.0mm (1.18") from bottom of bolt hole counterbore to bottom of valve.

Inch equivalents for millimeter dimensions are shown in (**)

A

Explosion Proof U.L. and C.S.A. Approved, Double Solenoid

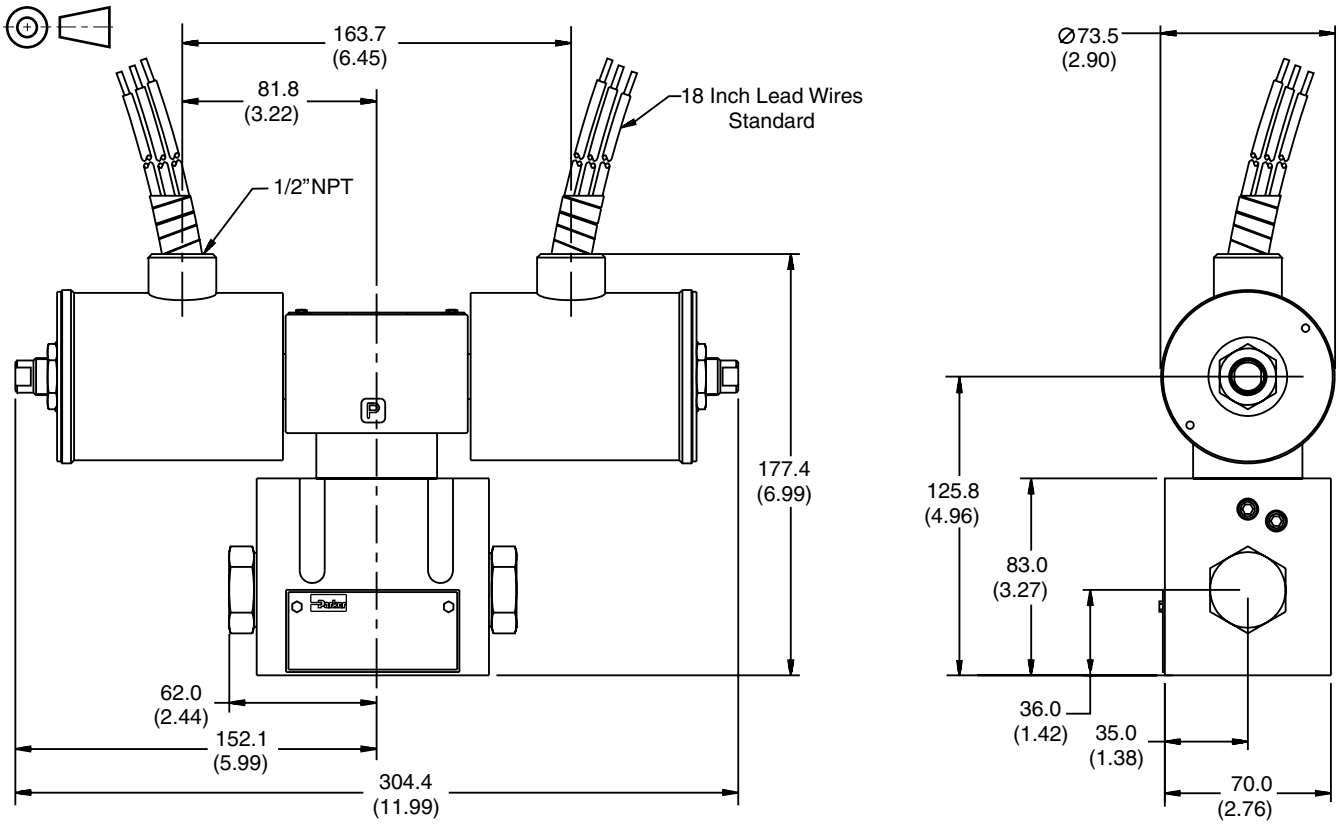

ATEX, Single Solenoid

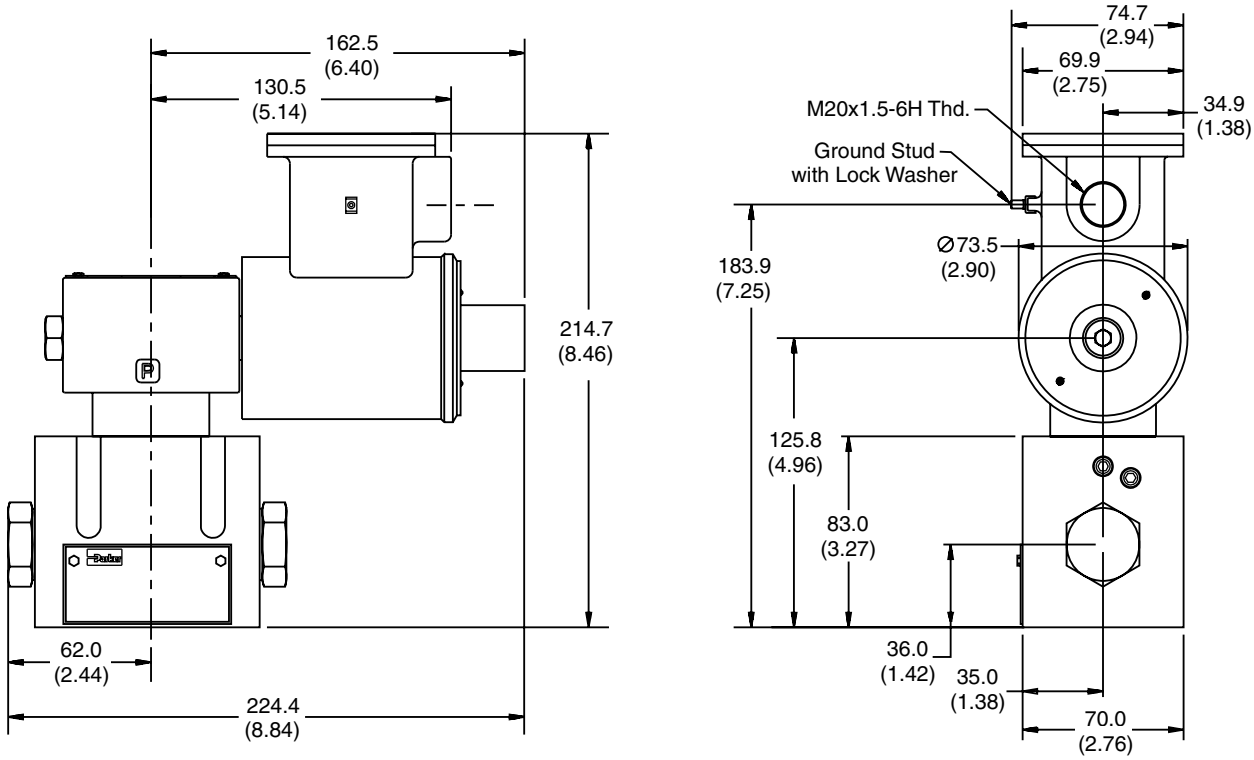

2502-A3.p65, dd

Parker Hannifin Corporation
Hydraulic Valve Division
Elyria, Ohio, USA

A

Plug-in Conduit Box Double DC Solenoid

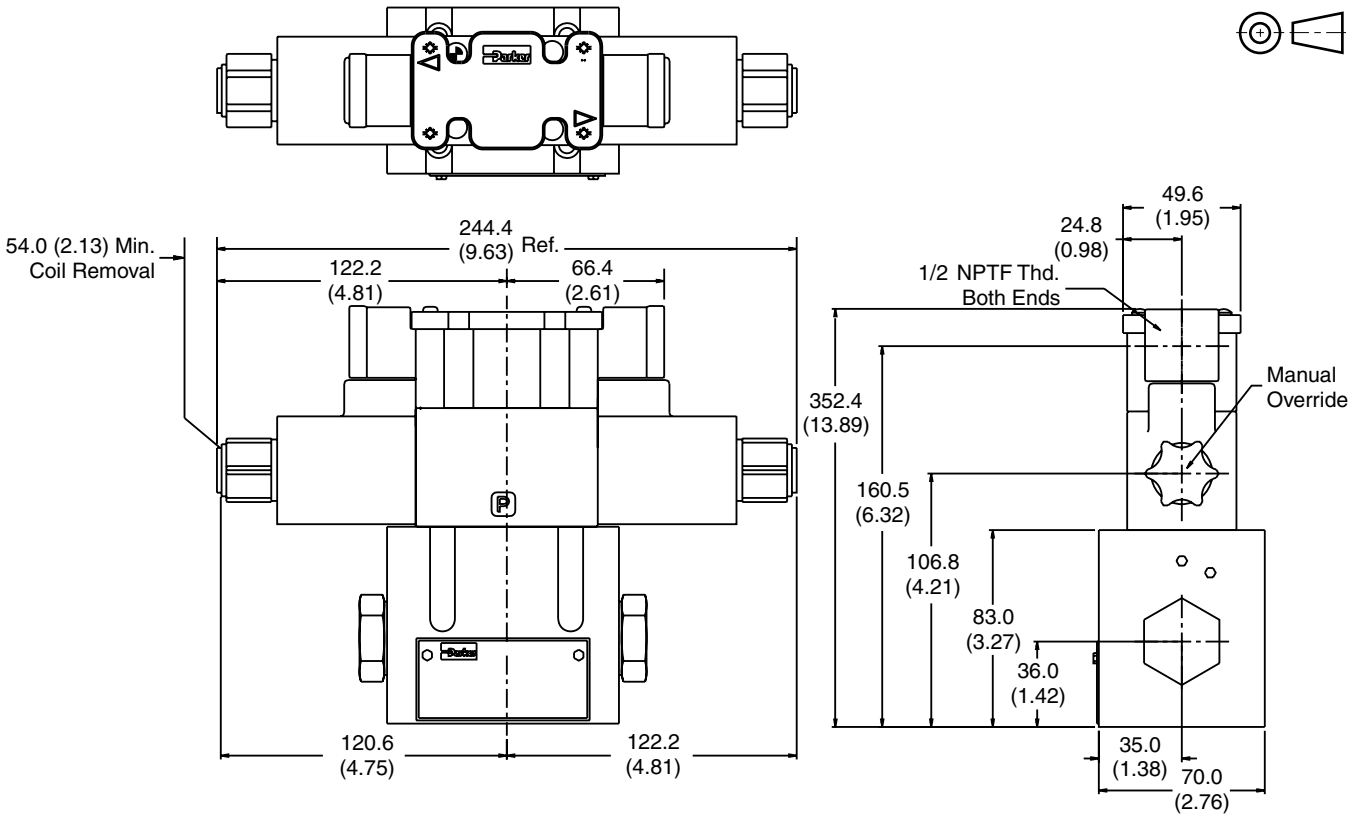

Plug-in Conduit Box, Single DC Solenoid

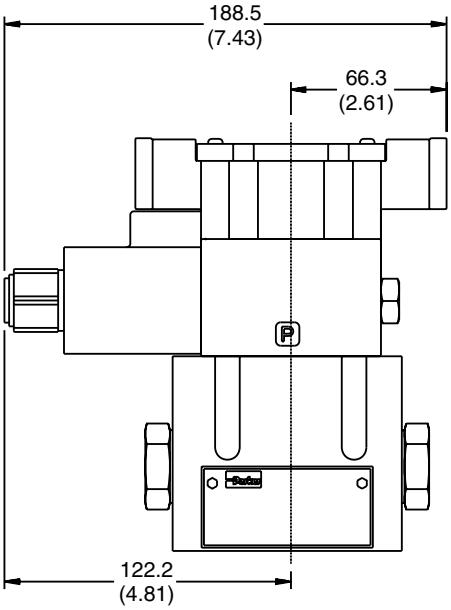

2502-A3.p65, dd

Parker Hannifin Corporation
Hydraulic Valve Division
Elyria, Ohio, USA

Inch equivalents for millimeter dimensions are shown in (**)

A

Plug-in Conduit Box, Double DC Solenoid with Variation I3 (Monitor Switch)

Double Solenoid. With solenoid "A" energized, flow path is P→A and B→T. When solenoid "B" is energized, flow path is P→B and A→T. The center condition on a spring-centered valve exists when both coils are de-energized, or during a complete shift, as the spool passes through center.

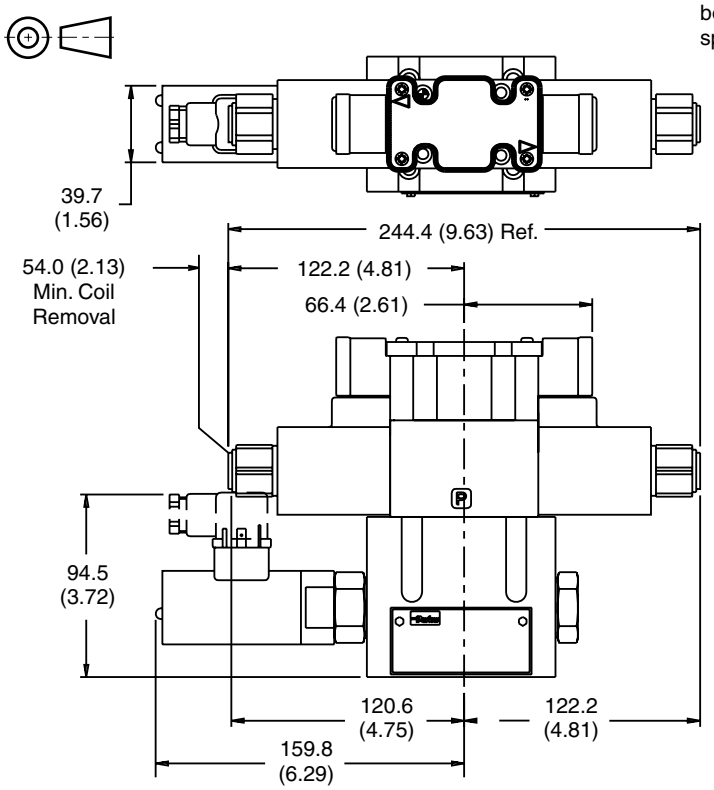

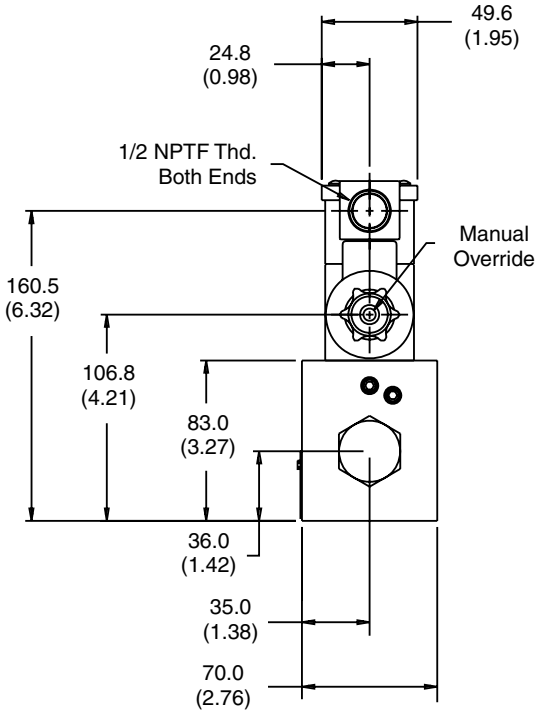

Monitor Switch
(valve variation I3 and I6)

This feature provides for electrical confirmation of the spool shift. This can be used in safety circuits, to assure proper sequencing, etc.

Switch Data

Pin 1 and Pin 3 have outputs equal to the input. When the monitor switch has the output to Pin 1, Pin 3 will have an output of zero, and vice-versa. When the valve is switched, Pin 1 and Pin 3 will switch outputs.

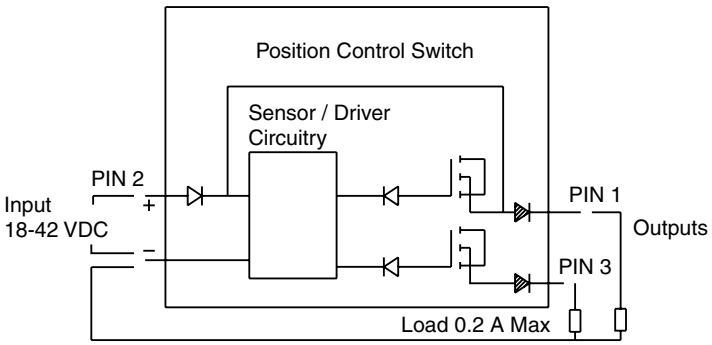

A

Manaplug (Options 6, 56, 1A & 1C)

Interface – Brad Harrison Plug
– 3-Pin for Single Solenoid
– 5-Pin for Double Solenoid

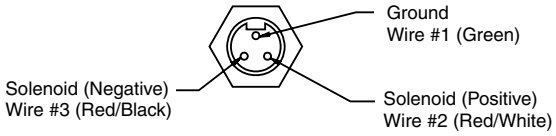

3-Pin Manaplug (Mini) with Lights
Single Solenoid Valves – Installed Opposite Side of Solenoid

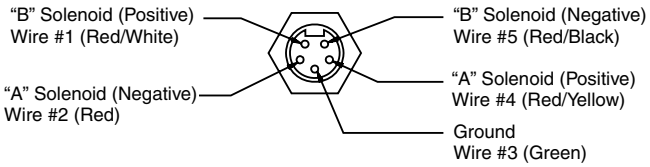

5-Pin Manaplug (Mini) with Lights
Single Solenoid Valves – Installed Opposite Side of Solenoid
Double Solenoid Valves – Installed Over "A" Solenoid
("A" and "B" Solenoids Reversed for #8 and #9 Spools)

Micro Connector Options (7A, 7B, 1B & 1D)

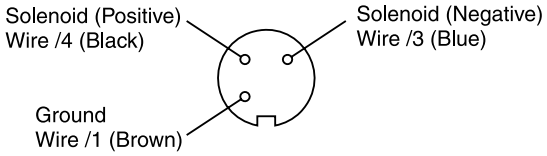

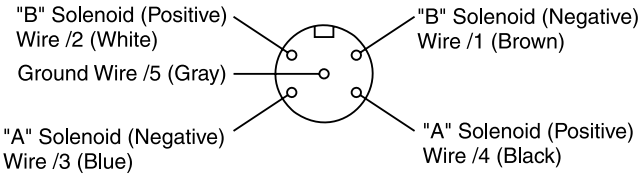

Pins are as seen on valve (male pin connectors).

Manaplug – Electrical Mini Plug

EP336-30	3 Pin Plug
EP316-30	5 Pin Plug (Double Solenoid)
EP31A-30	5 Pin Plug (Single Solenoid)

Manaplug – Electrical Micro Plug

EP337-30	3 Pin Plug
EP317-30	5 Pin Plug (Double Solenoid)
EP31B-30	5 Pin Plug (Single Solenoid)

Conduit Box (Standard/Plug-In; Option G)

Meets Nema 4/IP67

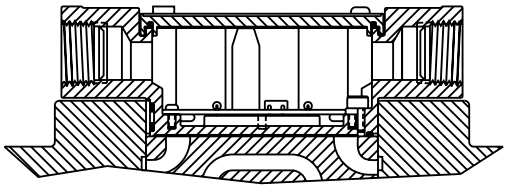

Signal Lights (Option 5)

– LED Interface

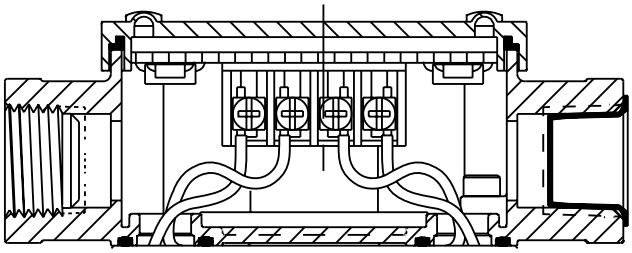

Hirschmann Plug with Lights (Option P5)

ISO 4400/DIN 43650 Form "A"

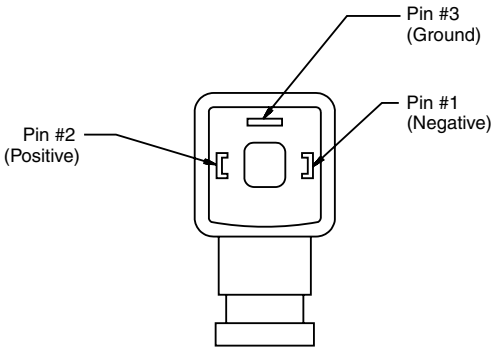

Face View of Plug

DESINA Connector (Option D)

M12 pin assignment
Standard

1 = Not used
2 = Not used
3 = 0V
4 = Signal (24 V)
5 = Earth Ground

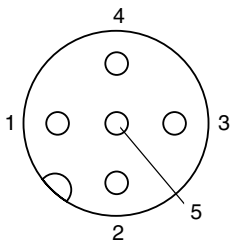

DESINA – design
Pin 1 and 2
connected

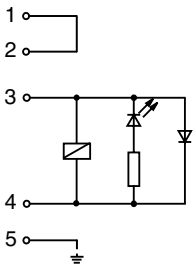

Pins are as seen on valve (male pin connectors).

2502-A3.p65, dd

Parker Hannifin Corporation
Hydraulic Valve Division
Elyria, Ohio, USA

A

FOR MAXIMUM VALVE RELIABILITY, ADHERE TO THE FOLLOWING INSTALLATION INFORMATION.

The following is important installation information which applies to all directional control valves described in this catalog.

Mounting Position

Detent – Horizontal
Spring Offset – Unrestricted
Spring Centered – Unrestricted

Fluid Recommendations

Premium quality hydraulic oil with a viscosity range between 32-54 cst. (150-250 SSU) At 38°C (100°F) is recommended. The absolute operating viscosity range is from 16-220 cst. (80-1000 SSU). Oil should have maximum anti-wear properties and rust and oxidation treatment.

Fluids and Seals

Valves using synthetic, fire-resistant fluids require special seals. When phosphate esters or its blends are used, FLUOROCARBON seals are required. Water-glycol, water-in-oil emulsions and petroleum oil may be used with STANDARD seals.

Filtration

For maximum valve and system component life, the system should be protected from contamination at a level not to exceed 125 particles greater than 10 microns per milliliter of fluid (SAE class 4/ISO 16/13).

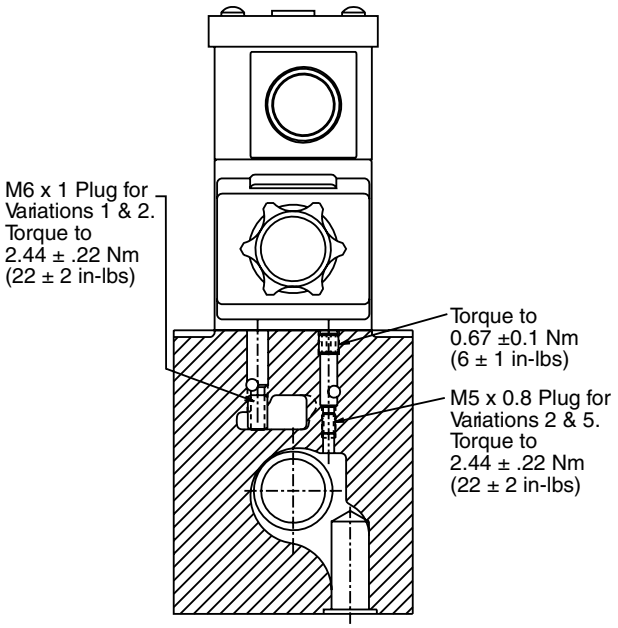

Silting

Silting can cause any sliding spool valve to stick and not spring return if held under pressure for long periods of time. The valve should be cycled periodically to prevent sticking.

Special Installations

Consult your Parker representative for any application requiring the following:

- Pressure above rating.
- Fluid other than those specified.
- Oil temperature above 71.1°C (160°F).
- Flow path other than normal.

Mounting Patterns

Series	NFPA	Size
D31V*, D3P	D05H, CETOP 5	3/8"
D31D*, D3DP	D05HE, CETOP 5H	3/8"

Torque Specifications

The recommended torque values for the bolts which mount the valve to the manifold or subplate are as follows: 16.3 Nm (12 ft-lb).

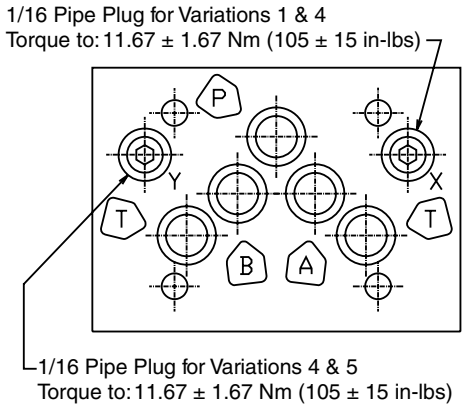

NFPA D05HE, CETOP 5H Pattern D31DW

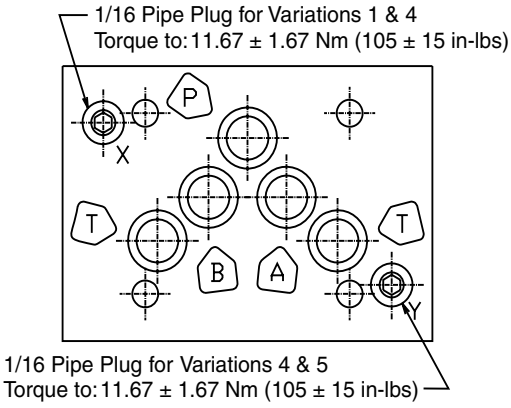

NFPA D05H, CETOP 5 Pattern D31VW

2502-A3.p65, dd

Parker Hannifin Corporation
Hydraulic Valve Division
Elyria, Ohio, USA

A

SERIES D31*W, D31*A, D31*L PILOT OPERATED, DIRECTIONAL CONTROL VALVES

Tank and Drain Line Surges

If several valves are piped with a common tank or drain line, flow surges in the line may cause an unexpected spool shift. No spring style valves are most susceptible to this. Separate tank and drain lines should be piped in installations where line surges are expected.

Electrical Failure or Loss of Pilot Pressure (D31*A)

Should electric power fail or loss of pilot pressure occur, spring offset and spring centered valves will shift to the spring held position. Detented valves will stay in the last position held before power failure. If main flow does not fail or stop at the same time power fails, machine actuators may continue to function in an undesirable manner or sequence.

Electrical Characteristics (Detented Spool)

Only a momentary energizing of the solenoid is necessary to shift and hold a detented spool. Minimum duration of the signal is 0.1 seconds for DC voltages. For AC voltages the response time is 0.06 seconds. Spool position will be held provided the spool centerline is in a horizontal plane, and not shock or vibration is present to displace the spool.

Pilot/Drain Characteristics

Pilot Pressure: 6.9 to 345 Bar (100 to 5000 PSI)

External: An oil source sufficient to maintain minimum pilot pressure must be connected to the "X" port of the main body. When using the external pilot variation, an M5 x 0.8 x 6mm long set screw must be present in the main body pilot passage. (For details see Dimension pages.) This plug will be furnished in valves ordered with pilot code 2 or 5.

Internal: Flow is internally ported from the pressure port of the main valve body to the "P" port of the pilot valve. The pressure developed at the "P" port of the pilot valve must be 100 PSI (6.9 Bar) minimum at all times.

If the valve center condition allows flow from pressure to tank, 100 PSI (6.9 Bar) back pressure must be developed in the tank line to ensure sufficient pilot force at "P". The "X" port in subplate must be plugged when using internal pilot variation (1/16 NPT).

Pilot Valve Drain:
Maximum pressure 102 Bar (1500 PSI), 207 Bar (3000 PSI) optional.

External: When using an external drain, an M6 x 1 x 10mm long set screw must be present in the main body drain passage. (For details see Dimension pages.) This plug will be furnished in valves ordered with drain code 1 or 2.

Drain flow from the pilot valve is at the "Y" port of the main body and must be piped directly to tank. Maximum drain line pressure is 102 Bar (1500 PSI), 207 Bar (3000 PSI) optional. Any drain line back pressure is additive to the pilot pressure requirement.

Internal: Drain flow from the pilot valve is internally connected to the main valve tank port. Tank and drain pressure are then identical so tank line pressure should not exceed 102 Bar (1500 PSI), 207 Bar (3000 PSI) optional. Any tank line back pressure is also additive to the pilot pressure requirement. If flow surges (a cause of pressure surges) are anticipated in the tank line, an external drain variation is recommended. The "Y" port in subplate must be plugged when using internal drain variations.

D31*W, D31*A, D31*L Flow Paths

Style Code	Description	No Solenoid/Operator Energized	Solenoid/Operator A Energized	Solenoid/Operator B Energized
B	Spring Offset	P→A and B→T	—	P→B and A→T
C	Spring Centered	Centered	P→A and B→T	P→B and A→T
D	Detented	Last Position Held	P→A and B→T	P→B and A→T
E	Spring Centered	Centered	—	P→B and A→T
F†	Spring Offset, Shift to Center	P→A and B→T	—	Centered
H	Spring Offset	P→B and A→T	P→A and B→T	—
K	Spring Centered	Centered	P→A and B→T	—
M†	Spring Offset, Shift to Center	P→B and A→T	Centered	—

† D31*W only.

2502-A3.p65, dd

Parker Hannifin Corporation
Hydraulic Valve Division
Elyria, Ohio, USA

A

SERIES D3P, D3DP PILOT OPERATED DIRECTIONAL CONTROL VALVES

Tank and Drain Line Surges

If several valves are piped with a common tank or drain line, flow surges in the line may cause an unexpected spool shift. Separate tank and drain lines should be piped in installations where line surges are expected.

Loss of Pilot Pressure

Should oil pilot pressure fail, spring offset and spring centered valves will shift to the spring held position. Detented valves will stay in the last position held before power failure. If main flow does not fail or stop at the same time power fails, machine actuators may continue to function in an undesirable manner or sequence.

Mounting Pattern

D3P valves may be mounted on a standard D05 pattern subplate or manifold only if the “X” and “Y” ports are externally connected to the pilot block on top of the main body. All other mounting styles require a D05H or D05HE pattern which incorporates ports for the “X” and “Y” pilot and drain passages. Location of these ports can be found on the Recommended Mounting Surface pages in this section.

Pilot Drain Characteristics

Pilot Pressure: 6.9 to 345 Bar (100 to 5000 PSI)

Direct pilot operated valves use the “X” and “Y” ports to supply pilot oil directly to the ends of the spool, providing spool shifting force. A block mounted on top of the valve body is internally cored to make the necessary connections. Thus when “X” is pressurized, “Y” is used as a drain; and when “Y” is pressurized, “X” becomes the drain.

Any back pressure in these lines when they are being used as a drain is additive to the pilot pressure requirement.

Internal Drain: On spring offset models, only the “X” port is pressurized, as the spring returns the spool to its at rest position. On these models, “Y” may be internally drained through the main tank passage in the valve.

D3P Flow Path/Pilot Pressure

Style Code	Description	“X” & “Y” De-Pressurized	“X” Port Pressurized	“Y” Port Pressurized	Special Notes	Recommended Control Valve For Pilot Oil
B	Two Position Spring Offset	P→A, B→T	P→A, B→T	P→B, A→T	“X” Port may be pressurized to assist spring in returning spool to offset position (ext. only)	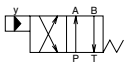
C	Three Position Spring Centered	Center	P→A, B→T	P→B, A→T	Flow paths will be reversed on valves with tandem center (8) spools	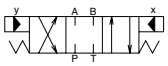
H	Two-Position Spring Offset	P→B, A→T	P→A, B→T	P→B, A→T	“Y” Port may be pressurized to assist spring in returning spool to offset position	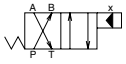

A

Series D31VW, D31VA, D31VL, D3P Subplate Mounting NFPA D05H, CETOP 5

Recommended Mounting Surface

Surface must be flat within .102 mm (0.0004 inch) T.I.R and smooth within 812.8 micro-meters (32 micro-inch). Torque bolts to 16.3 Nm (12 ft-lbs).

For maximum valve reliability, adhere to the following installation information.

Mounting Position

Valve Type	Mounting Position
Detent (Solenoid)	Horizontal
Spring Offset	Unrestricted
Spring Centered	Unrestricted

Mounting Pattern

Inch equivalents for millimeter dimensions are shown in (**)

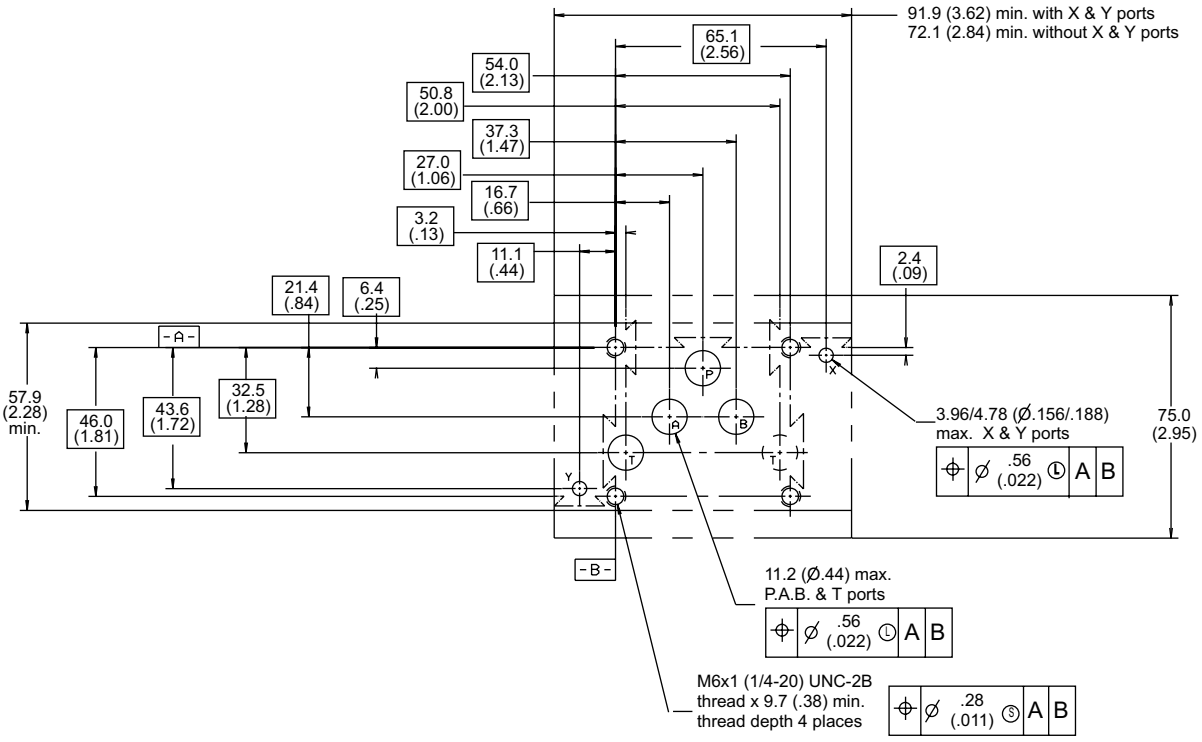

2502-A3.p65, dd

Parker Hannifin Corporation
Hydraulic Valve Division
Elyria, Ohio, USA

A

Series D31DW, D31DA, D31DL, D3DP
Subplate Mounting
NFPA D05HE, CETOP 5H

Recommended Mounting Surface

Surface must be flat within .102 mm (0.0004 inch) T.I.R. and smooth within 812.8 micro-meters (32 micro-inch). Torque bolts to 16.3 Nm (12 ft-lbs).

For maximum valve reliability, adhere to the following installation information.

Mounting Position

Valve Type	Mounting Position
Detent (Solenoid)	Horizontal
Spring Offset	Unrestricted
Spring Centered	Unrestricted

Mounting Pattern

Inch equivalents for millimeter dimensions are shown in (**)