Light Duty Aluminum

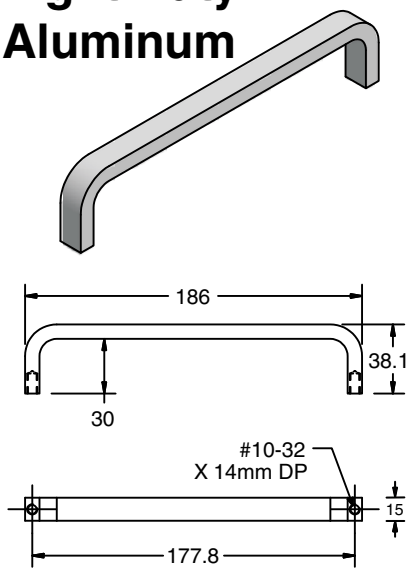

25-110-2

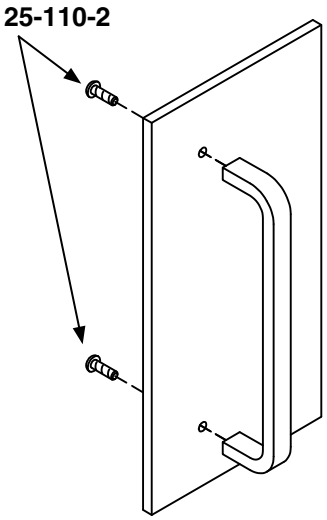

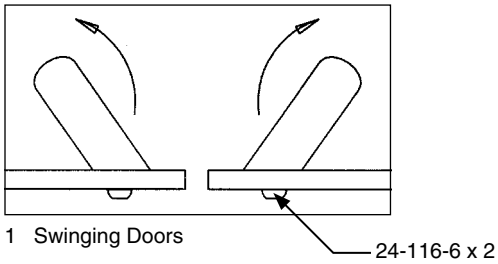

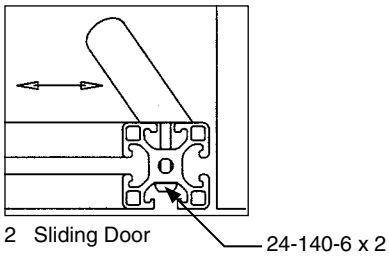

23-030

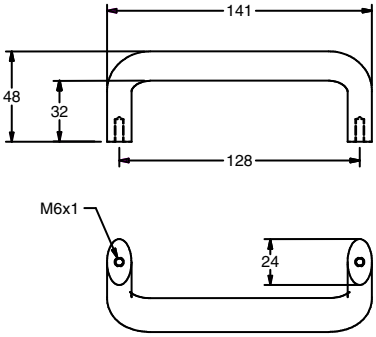

23-034

Application

Handle for light duty doors

Technical Data

23-030: Aluminum, Clear Anodized
23-034: Aluminum, Black Powdercoat

Recommended Fastening Hardware (Order Separately)

Part #	Screws	Application
23-030	(2) 25-110-2	Panel Mount
23-034	(2) 24-116-6	Panel Mount (picture #1)
	(2) 24-140-6	Profile Mount (picture #2)

Ordering Information

Description	Unit	Weight	Part #
Light Duty Aluminum Handle	Each	85 g	23-030
Light Duty Aluminum Angled Handle	Each	11 g	23-034

Parker Hannifin Corporation
Industrial Profile Systems
Wadsworth, Ohio USA

www.comoso.com