# RC Series

## Rodless Air Cylinder

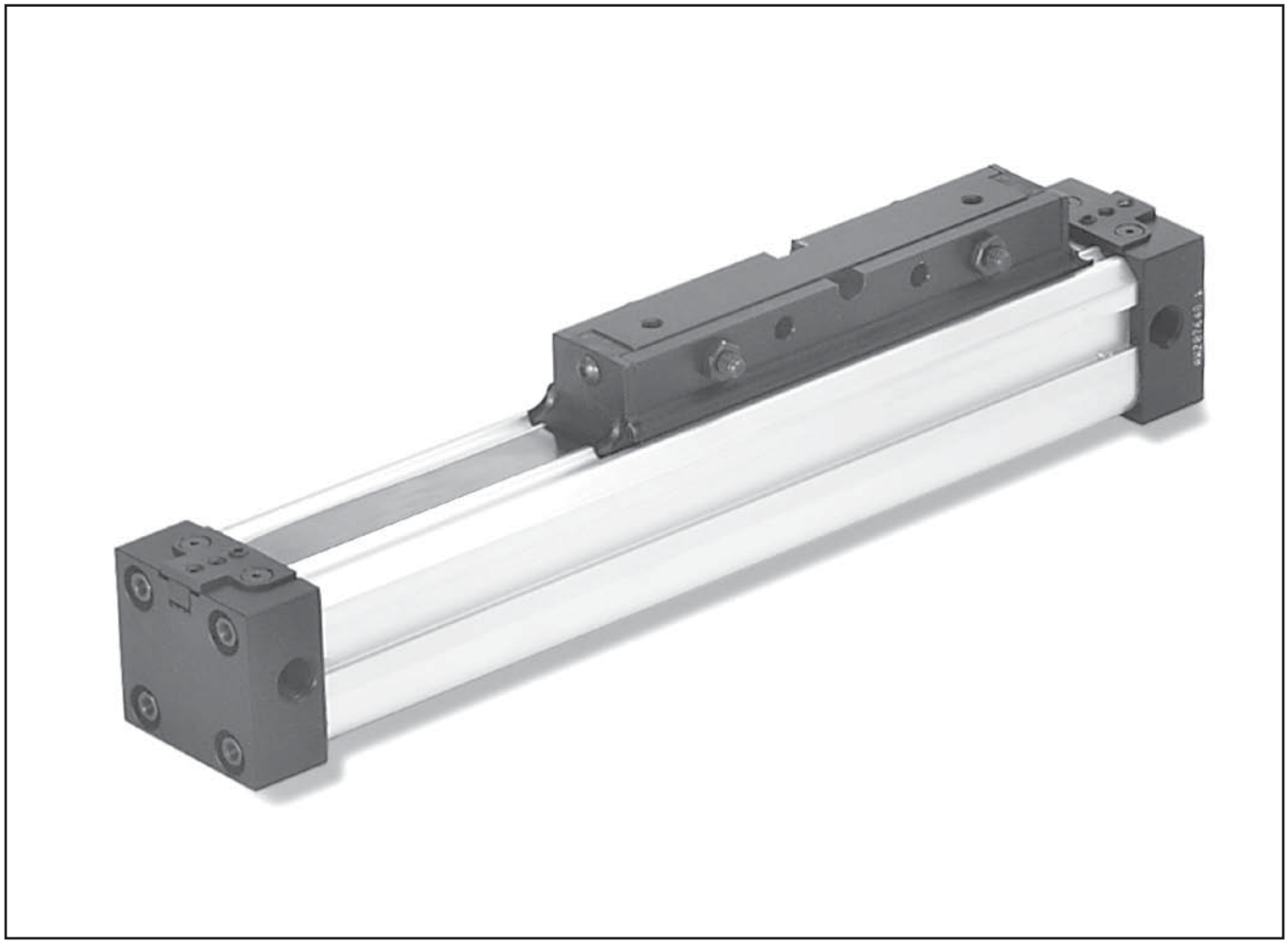



**Contents**





800.696.6165
www.comoso.com
**Parker Hannifin Corporation**
Parker-Origa
Glendale Heights, Illinois
www.parker.com/pneu/rodless

**Band Wipers:** The wiper cleans and reseats the upper band, keeping dirt and contaminants from the sealing area of the cylinder. The wiper assembly also cleans the path of the Delrin® support rods ensuring the piston carriage travels smoothly.

**Bearing Strips**
Located on the side of the piston carriage, the bearing strips slide along the slot in the cylinder tube. They reduce the effects of side loads on piston wear and cylinder life.

**Retained Cushion Adjusting Screws**
The captive screw increases safety during machine operation and maintenance. It cannot be accidentally backed out too far—cushion adjustment screw "blowout" is prevented.

**Piston Carriage Supports**
Delrin® rods support and guide carriage loads (not available in 25mm bore). This unique design transfers the loading from the piston to the support rods and increases seal life. The negative effects of moderate side loading are minimized.

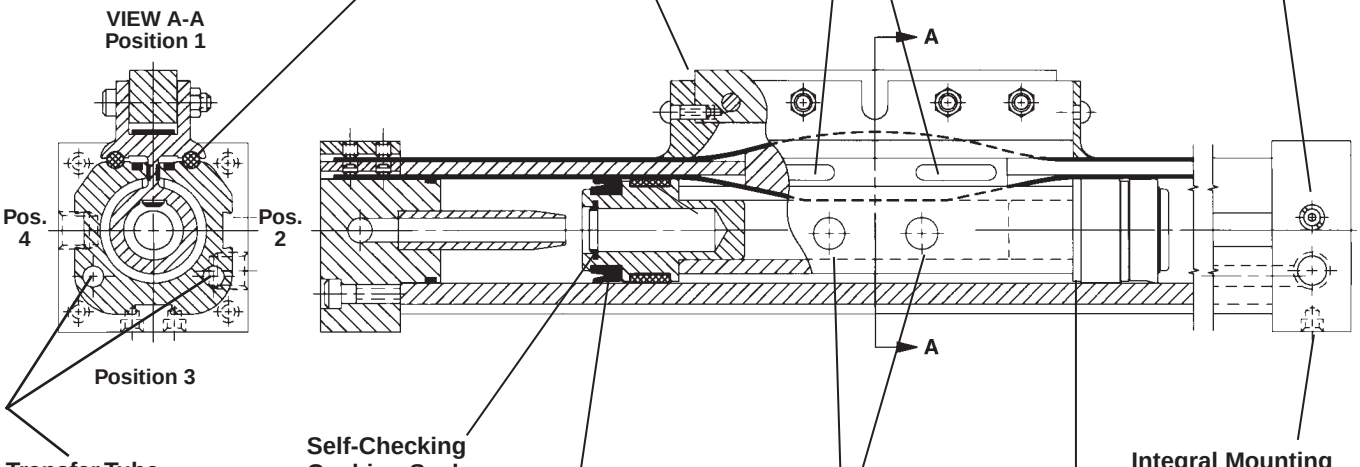


**Transfer Tube**
The standard RC Series cylinder features a transfer tube which allows air to be directed to both sides of the piston from one end of the cylinder. Long tubing or hose runs can be eliminated. When double-porting is required for faster piston travel, an optional end cap design is available.

**Self-Checking Cushion Seals**
Adjustable cushions, supplied as standard, decelerate piston smoothly at end of stroke.

**Piston Seals**
Cylinder can be operated without the addition of lubrication. Seals ride a thin film of Teflon® impregnated lubricant for smoother piston travel and extended seal life.

**Magnetic Piston**
An optional magnetic piston, with reed or solid state sensors, provides piston position sensing. The sensor assembly is dovetail mounted; offering many sensor locations for desired feedback without the expensive and cumbersome, add-on track mounted sensors.

**Integral Mounting Holes**
Two tapped holes on the bottom surface and four tapped holes on the face of each end cap add to mounting possibilities. The cylinder can be installed without the addition of any accessories. If needed, the optional foot mounts can be used.

**Nylon Piston Wear Bands**
Nylon piston bearings increase cylinder life and load bearing capacity by the elimination of metal-to-metal contact. Friction resistance characteristics are also enhanced.





**Parker Hannifin Corporation**
Parker-Origa
Glendale Heights, Illinois
www.parker.com/pneu/rodless

## Model Code

| 40 | C | F | | | | | RC | D | U | M | | C | 20.000 |
|---|---|---|---|---|---|---|---|---|---|---|---|---|---|

Combination Mounting

**Bore (mm)**
- 25
- 32
- 40
- 50
- 63

**Cushion End A**
- **C** Standard

**Mounting Style**
- **F** Cylinder Only
- **FM** Cylinder with Foot Mount

**Mounting Modifications**
- **Blank** Standard
- **D** Double Porting Configuration

**Combination Mounting**
- **Blank** None
- **C** Intermediate Supports

**Combination Mounting Quantity/Location**
- **Blank** No Combination Mounting

If required:
1st Digit = Quantity (**1-9**).
2nd Digit = Location
- **3** Standard Carriage, Position 3
- **2** Inverted Carriage, Position 2
- **4** Inverted Carriage, Position 4

**Piston Carriage Mount**

**Standard Carriage**
- **D** Basic Mount
- **N** Basic Mount, Double Carriage
- **T** Flange Mount
- **E** Flange Mount, Double Carriage
- **A** Swivel Mount

**Inverted Carriage**
- **J**† Basic Mount
- **B**† Basic Mount, Double Carriage
- **L***† Flange Mount
- **K***† Flange Mount, Double Carriage
- **G***† Swivel Mount

* Not available in 25mm & 32mm Bore.
† Not available in 50mm & 63mm Bore.

**Ports**
- **U** NPTF

**Magnetic Piston**
- **Blank** Standard
- **M** Magnetic Piston

**Special Modifications**
Specify "S" if special modifications required.
List in clear text.

**Cushion End B**
- **C** Standard

**Stroke**
Specify in inches.

For sensor specifications and part numbers, please refer to the Electronic Sensors section.





**Parker Hannifin Corporation**
Parker-Origa
Glendale Heights, Illinois
www.parker.com/pneu/rodless

## Specifications

- Anodized Aluminum
  End Caps, Body, Piston Carriage
- Stainless Steel Sealing Band
- Buna-N Piston Seals
- Retained Adjustable Cushions
- Integral Mounting Holes
- Transfer Port (optional)
- Nominal Pressure Rating 115 PSI
- Standard Operating Temperature -10°F to 165°F
- Strokes Available Up to 24 ft.
- Standard Fluid: Filtered, Lubricated or Non-Lubricated Air

## Weights

| Bore | Base Weight (lb) by Mounting Style | | | | | | | Weight per Inch Stroke (lb) |
|---|---|---|---|---|---|---|---|---|
| | D,T,A | N,E | J | B | L | K | G | |
| **25mm** | 2.5 | 3.7 | 3.1 | 4.8 | N/A | N/A | N/A | 0.20 |
| **32mm** | 5.4 | 7.8 | 6.4 | 9.8 | N/A | N/A | N/A | 0.25 |
| **40mm** | 7.5 | 11.4 | 9.3 | 15.2 | 9.3 | 15.2 | 9.3 | 0.30 |
| **50mm** | 11.1 | 15.6 | 14.1 | 21.6 | 14.1 | 21.6 | 14.1 | 0.48 |
| **63mm** | 19.8 | 27.4 | 23.6 | 35.0 | 23.6 | 35.0 | 23.6 | 0.65 |

## Force Data

To determine the thrust available from your RC Series cylinder, enter the graph along the base at the pressure to be supplied at the inlet of the cylinder. Project vertically to the appropriate thrust line. The corresponding value on the left axis is the available force from the cylinder. Static thrust values indicate the force available when the cylinder is not in motion.

(**Note:** Rodless cylinders are not recommended for load holding applications. If used in this type of application a continuous pressure supply must be maintained).

Dynamic thrust values indicate the maximum recommended load capacity for a cylinder in motion. In a dynamic condition, there is pressure on the back side of the piston (dependent upon the plumbing and valving used in the system) which must be overcome in addition to moving a load. These factors, coupled with the compressibility of air and cylinder friction, result in dynamic thrust being a percentage of static thrust. This graph assumes average conditions relative to air line sizes, system layout, component sizes, friction, etc. The resulting dynamic thrust is approximately 50% of corresponding static values.

G

### Force at Various Pressures
**Thrust Developed (25 mm Bore)**

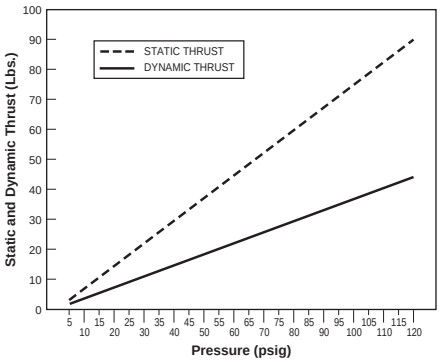


### Force at Various Pressures
**Thrust Developed (32 mm Bore)**

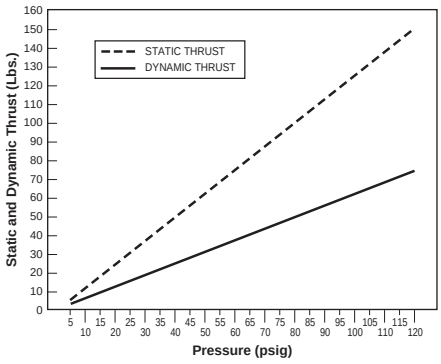


### Force at Various Pressures
**Thrust Developed (40 mm Bore)**

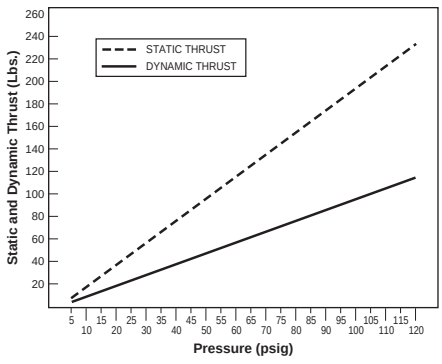


### Force at Various Pressures
**Thrust Developed (50 mm Bore)**

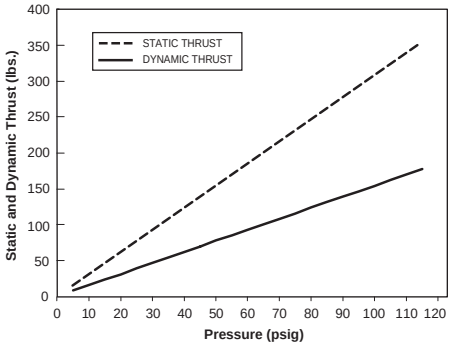


### Force at Various Pressures
**Thrust Developed (63 mm Bore)**

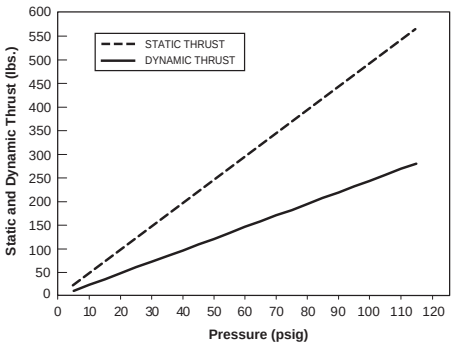






**Parker Hannifin Corporation**
Parker-Origa
Glendale Heights, Illinois
www.parker.com/pneu/rodless

C347

Application of Parker RC Series Cylinders requires that external loading forces be considered. Exceeding design stresses by overloading the cylinders may affect the construction integrity and operation of the cylinder. Shown below are various loading characteristics inherent to rodless cylinder applications and RC Series load capacities. Load and Moment Data apply to both standard and inverted piston carriage construction. Each application should be within the limits for the appropriate bore size. Exceeding these boundaries can result in premature cylinder wear and/or failure of the cylinder.

**⚠ CAUTION**

The force of deceleration, especially if a large mass is attached to the carriage, should be considered when calculating loads to be carried by the rodless cylinder. A large mass, in conjunction with a high deceleration force, can cause damage to the cylinder and/or the loss of control of the load. Either can result in equipment damage and danger to nearby personnel.

High deceleration forces may occur, but are not limited to the initial set-up of a machine. To minimize the potential danger, the following steps are suggested in addition to normal set-up procedures.

A. The rodless cylinder should be plumbed with flow controls in a "meter out" mode.
B. 1. Open the cushion needle valve adjustment screw 1/4 of a turn from completely closed.
   2. Open the flow control valves 1/2 of a turn from completely closed.
C. Cycle the cylinder.
D. To adjust the speed of the cylinder, slowly open the flow control valves. To adjust the cushion, slowly adjust the cushion needle valve screw.
E. Repeat the procedure until the required piston velocity and cushion performance is achieved.

## Maximum Load – L

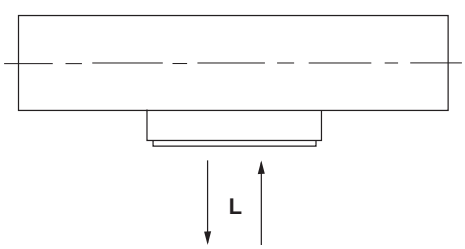


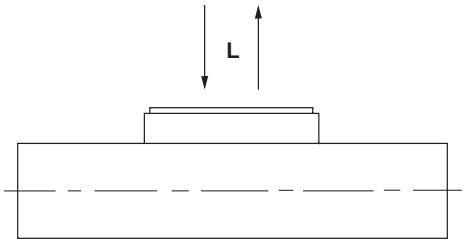


## Maximum Bending Moment – M

**M = F x r**

**Standard Carriage Mount**

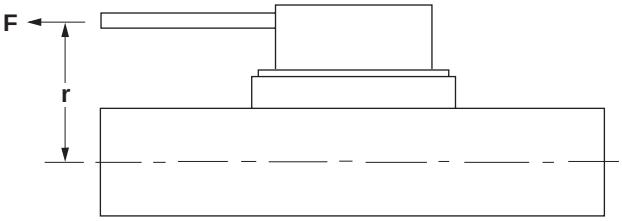


**Inverted Carriage Mount**

**M=F x r**

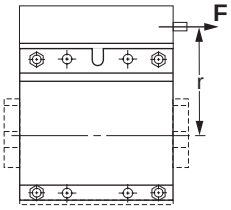


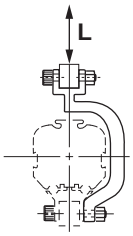


## Maximum Bending Moment – $M_S$

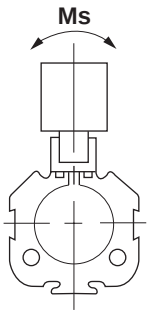


***Intermediate Mount Inverted Carriage**

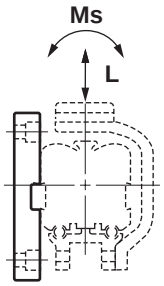


***NOTE:** Intermediate Mount Inverted Piston Load and Moment Data (see preceding page).

## Maximum Torsional Moment – $M_V$

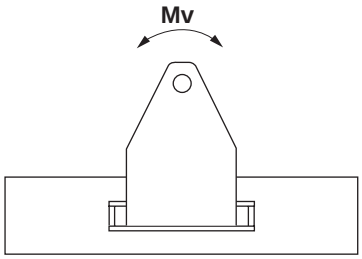


**Top View**

| Bore Size | Maximum Bending Moment | | | | | Maximum Torsion Stress | | Max Load (L) | |
|---|---|---|---|---|---|---|---|---|---|
| | Standard Carriage | | Double Carriage | | Inverted Carriage | Standard Carriage | Double Carriage | Standard/Double | Inverted |
| | M lbs-ft | $M_S$ lbs-ft | M lbs-ft | $M_S$ lbs-ft | M lbs-ft | $M_V$ lbs-ft | $M_V$ lbs-ft | lbs | lbs |
| **25** | 5.5 | .38 | 14 | 0.8 | 5.5 | 1.2 | 1.9 | 33 | 9 |
| **32** | 13.3 | 1.5 | 30 | 3 | 13.3 | 5 | 25 | 58 | 29 |
| **40** | 22 | 1.5 | 50 | 3 | 22 | 5 | 15 | 85 | 33 |
| **50** | 43 | 4 | 85 | 8 | 42.5 | 13 | 61 | 135 | 72 |
| **63** | 74 | 4.8 | 148 | 9.5 | 74 | 14.5 | 67 | 185 | 96 |





Parker Hannifin Corporation
Parker-Origa
Glendale Heights, Illinois
www.parker.com/pneu/rodless

## Cushion Data

Check the graph at right to determine whether a cylinder will adequately stop a load without damage to the cylinder. To determine the weight of the load and the maximum speed of the piston carriage, enter the graph at the base and project vertically to the required speed. This point of intersection should fall below the appropriate back pressure line.

### Cushion Data
**Kinetic Energy Graph (25 mm Bore)**

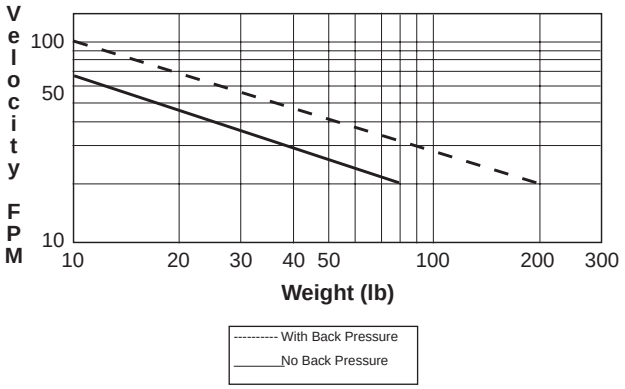


### Cushion Data
**Kinetic Energy Graph (32 mm Bore)**

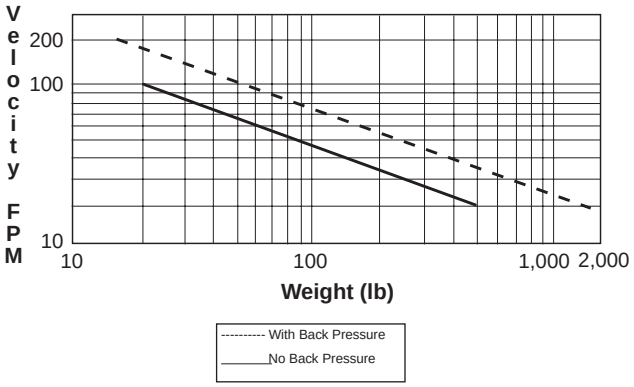


### Cushion Data
**Kinetic Energy Graph (40 mm Bore)**

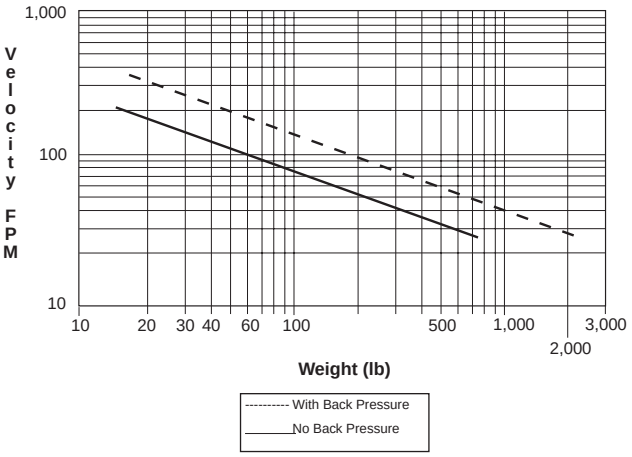


### Cushion Data
**Kinetic Energy Graph (50 mm Bore)**

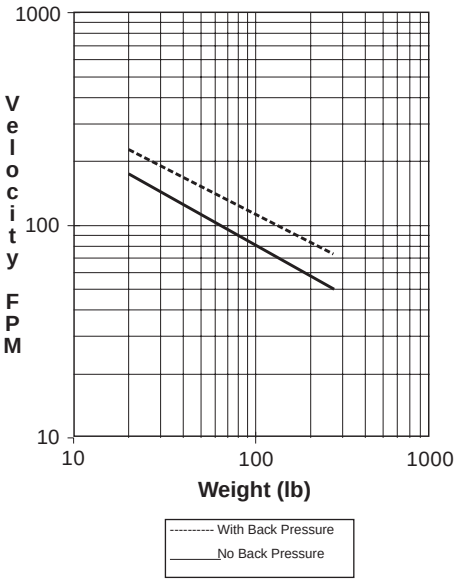


### Cushion Data
**Kinetic Energy Graph (63 mm Bore)**

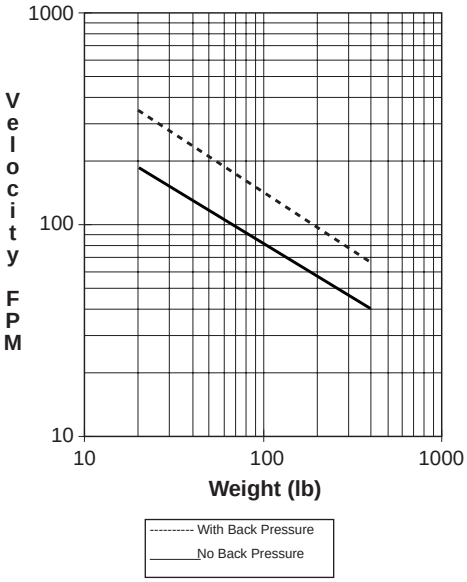


G





**Parker Hannifin Corporation**
Parker-Origa
Glendale Heights, Illinois
www.parker.com/pneu/rodless

C347

## Porting Configurations

The RC Series cylinder is available in two porting/end cap configurations. In the standard configuration, End A is at your left when looking at the cylinder and viewing both ports. Looking at the face of the cap on End A with the tube slot at the top, position 1 is on top, with 2, 3, and 4 continuing in a clockwise direction. With the standard porting configuration, air can be directed to and exhausted from the "End A" side of the piston by using port #2 on "End A". Air can be directed to and exhausted from the "End B" side of the piston by using either or both ports #2 on "End B" or #4 on "End A".

| Bore | Main | Transfer |
|---|---|---|
| **25mm** | 1/8" NPTF | 1/8" NPTF |
| **32mm** | 1/4" NPTF | 1/8" NPTF |
| **40mm** | 1/4" NPTF | 1/4" NPTF |
| **50mm** | 3/8" NPTF | 1/4" NPTF |
| **63mm** | 3/8" NPTF | 3/8" NPTF |

**Top View**

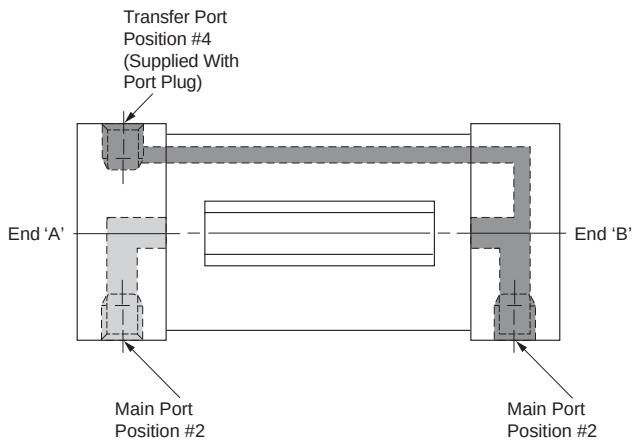


**Standard Porting Cylinder Configuration**

**Top View**

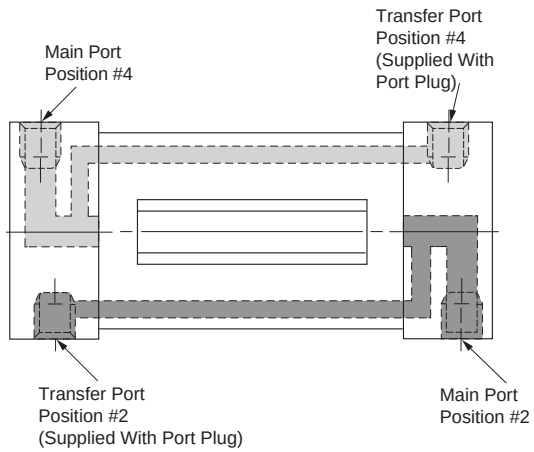


**Double Porting Cylinder Configuration**

The double porting configuration has the same end caps on both sides. With the double porting configuration, *each* side of the piston can be fed and exhausted by two ports as explained in the example above describing the "End B" side of the piston. Main pressure ports are located on opposite sides of the cylinder.

## Cylinder Selection

### How to Select Your Parker RC Series Cylinder

1. Consult Force Chart to determine the bore required.
2. Cushions are standard on the RC Series cylinder. Check the cushion data chart to verify that the cushions are sufficient to decelerate the load. If not, external means of deceleration must be considered.
3. Choose the cylinder mounting style and piston carriage.
4. For cylinders requiring sensors, configure sensor code for sensors required.
5. Determine if intermediate supports are necessary. For cylinders with the standard piston carriage, intermediate supports will be supplied in position #3 only. If the inverted piston carriage is used, select position #2 or position #4. Other intermediate support positions are available as a special order.
6. Consult the porting configuration diagrams for an illustration of available flow characteristics. Choose between the standard porting and the double porting configuration.







**Parker Hannifin Corporation**
Parker-Origa
Glendale Heights, Illinois
www.parker.com/pneu/rodless

## Placing of Supports

A main advantage of the Parker RC Series air cylinder is its ability to act as its own support member as it spans the length of the carriage travel. The cylinder body does not require support over its entire stroke.

In the example below, a cylinder with an end to end dimension of “d”, and with a load “L” can span a distance of “d” with no intermediate support required. If the stroke of the cylinder is in excess of distance “d” or if Load “L” increases even if “d” remains constant, an intermediate support member must be placed so that the distance “d” is not exceeded for the corresponding Load (L).

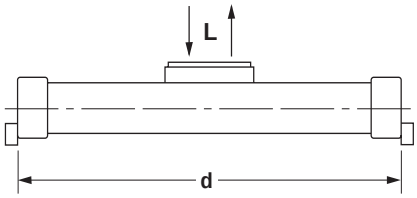


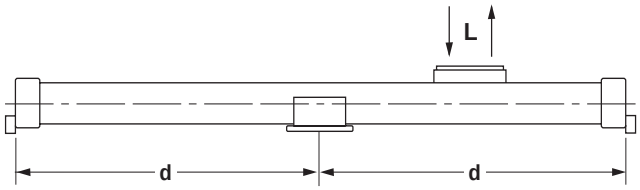


Parker RC Series cylinders can be fitted with intermediate supports that attach to dovetail mounts along the side of the cylinder. Consult the charts below to determine if intermediate supports are required on your cylinder. Points along the curve indicate the maximum distance allowed between supports for a corresponding load (L).

Intermediate supports are designed for use with the orientation shown below. For an application with any other orientation, consult factory.

G

### Intermediate Support
**Loading Conditions (25 mm Bore)**

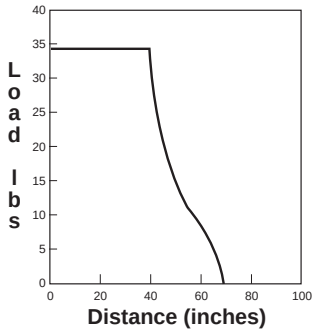


### Intermediate Support
**Loading Conditions (32 mm Bore)**

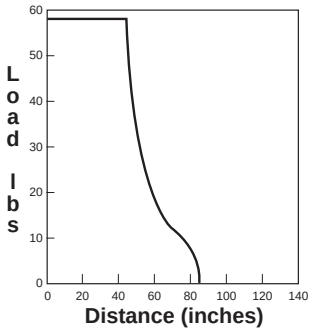


### Intermediate Support
**Loading Conditions (40 mm Bore)**

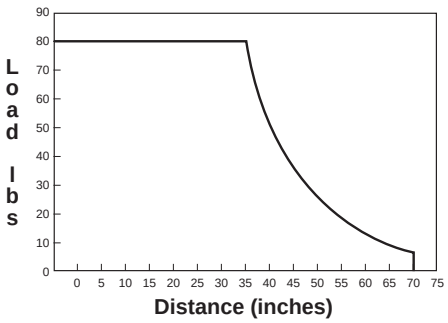


### Intermediate Support
**Loading Conditions (50 mm Bore)**

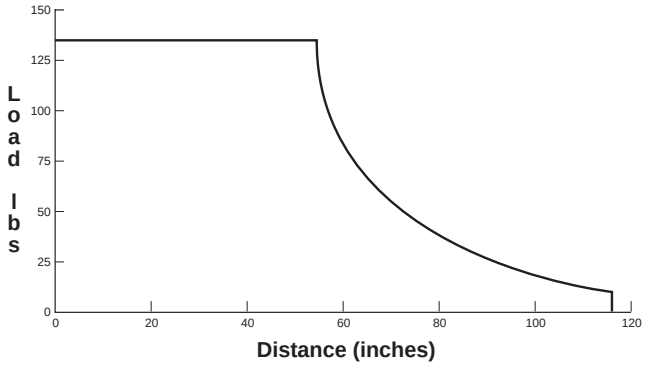


### Intermediate Support
**Loading Conditions (63 mm Bore)**




**Parker Hannifin Corporation**
Parker-Origa
Glendale Heights, Illinois
www.parker.com/pneu/rodless

## Intermediate Support

### 25mm & 32mm Bore Size

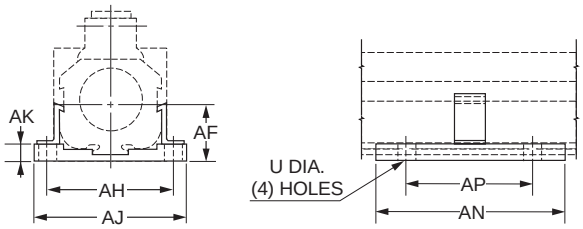


### 40mm, 50mm & 63mm Bore Size

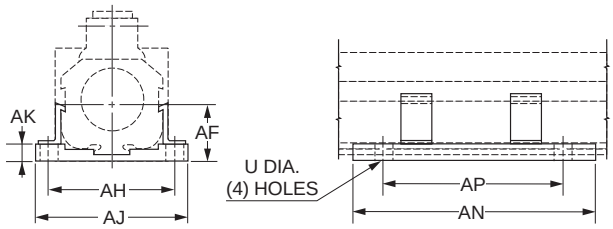


| Bore | Unit | AF | AH | AJ | AK | AN | AP | U |
|---|---|---|---|---|---|---|---|---|
| 25mm | in. | 0.94 | 2.38 | 3.00 | 0.24 | 2.00 | 1.25 | 0.22 |
| | mm | 23.9 | 60.5 | 76.2 | 6.10 | 50.8 | 31.8 | 5.59 |
| 32mm | in. | 1.43 | 2.69 | 3.38 | 0.46 | 2.50 | 1.75 | 0.22 |
| | mm | 36.3 | 68.3 | 85.9 | 11.7 | 63.5 | 44.5 | 5.59 |
| 40mm | in. | 1.50 | 3.12 | 3.87 | 0.43 | 6.30 | 4.75 | 0.35 |
| | mm | 38 | 80 | 98 | 11 | 160 | 121 | 9 |
| 50mm | in. | 2.01 | 3.63 | 4.38 | 0.57 | 6.25 | 4.75 | 0.35 |
| | mm | 51.1 | 92.2 | 111.3 | 14.5 | 158.8 | 120.7 | 8.9 |
| 63mm | in. | 2.24 | 4.38 | 5.13 | 0.53 | 6.25 | 4.75 | 0.35 |
| | mm | 56.9 | 111.3 | 130.3 | 13.5 | 158.8 | 120.7 | 8.9 |

## Intermediate Supports Inverted Carriage Mounts

### 40mm, 50mm & 63mm Bore Size

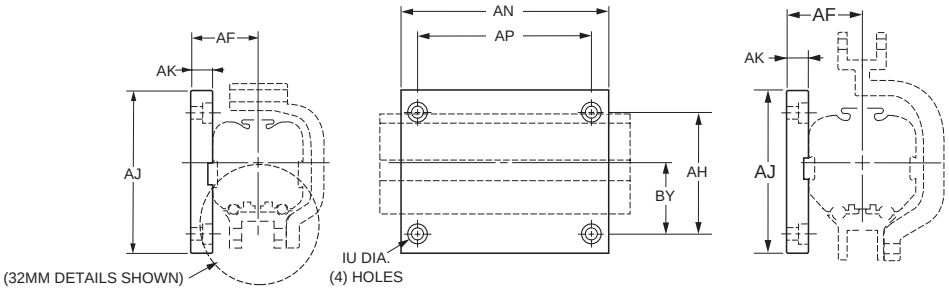


| Bore | Unit | AF | AH | AJ | AK | AN | AP | BY | IU |
|---|---|---|---|---|---|---|---|---|---|
| 25mm | in. | 1.44 | 2.38 | 3.13 | 0.50 | 3.00 | 2.25 | 1.34 | 0.28 |
| | mm | 36.6 | 60.5 | 79.5 | 12.7 | 76.2 | 57.15 | 34 | 7.1 |
| 32mm | in. | 1.55 | 2.88 | 3.75 | 0.50 | 5.00 | 4.25 | 1.65 | 0.28 |
| | mm | 39.37 | 73.2 | 95.25 | 12.7 | 127 | 107.95 | 41.91 | 7.1 |
| 40mm | in. | 1.80 | 2.88 | 3.75 | 0.50 | 5.00 | 4.25 | 1.54 | 0.28 |
| | mm | 45.72 | 73.2 | 95.25 | 12.7 | 127 | 107.95 | 39.1 | 7.1 |
| 50mm | in. | 2.01 | 3.75 | 4.75 | 0.5 | 5.13 | 4.25 | 1.86 | 0.35 |
| | mm | 51.1 | 95.3 | 120.6 | 12.7 | 130.3 | 107.9 | 47.2 | 8.9 |
| 63mm | in. | 2.38 | 4.13 | 5.38 | 0.50 | 5.13 | 4.25 | 2.14 | 0.35 |
| | mm | 60.45 | 104.9 | 136.7 | 12.7 | 130.3 | 107.9 | 54.4 | 8.9 |

### Load & Moment Data for Intermediate Mount (Inverted Piston)*

| Bore | Maximum Bending Moment Ms (ft-lbs) | Load (lbs) |
|---|---|---|
| 25mm | 0.38 | 33 |
| 32mm | 1.5 | 58 |
| 40mm | 1.5 | 85 |
| 50mm | 4 | 108 |
| 63mm | 4.8 | 108 |

*See following page.







**Parker Hannifin Corporation**
Parker-Origa
Glendale Heights, Illinois
www.parker.com/pneu/rodless

## Basic Mount – Style D

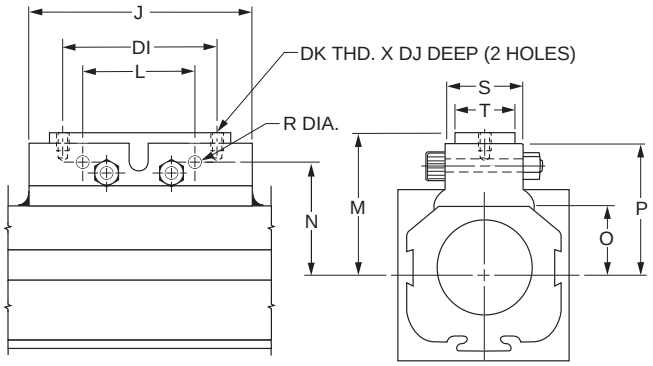


See Table 1 for dimensions

## Basic Mount Double Carriage – Style N

C347

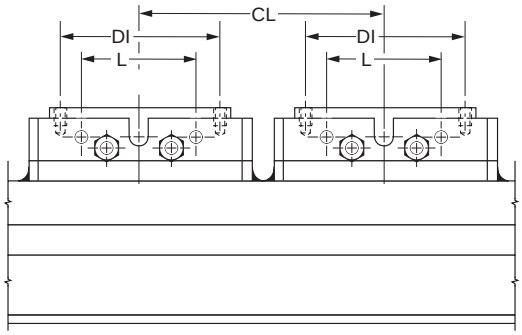


## Flange Mount – Style T

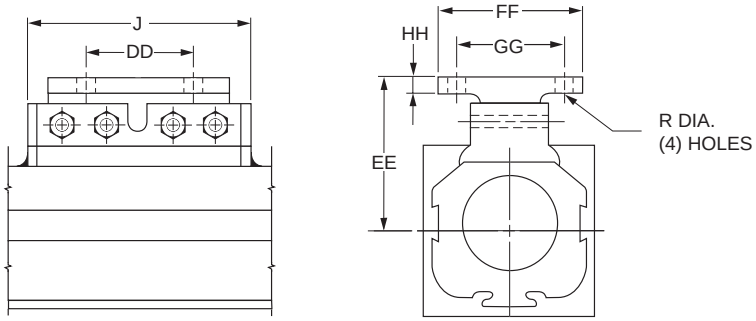


See Table 1 for dimensions

## Flange Mount Double Carriage – Style E

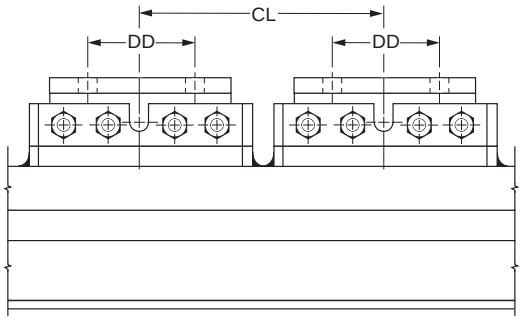


## Swivel Mount – Style A

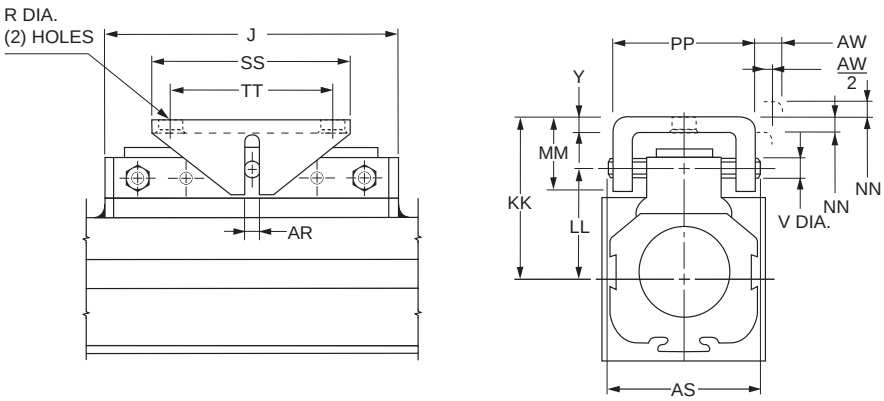


See Table 1 for dimensions





**Parker Hannifin Corporation**
Parker-Origa
Glendale Heights, Illinois
www.parker.com/pneu/rodless

## Mount Dimensions

### Double Carriage

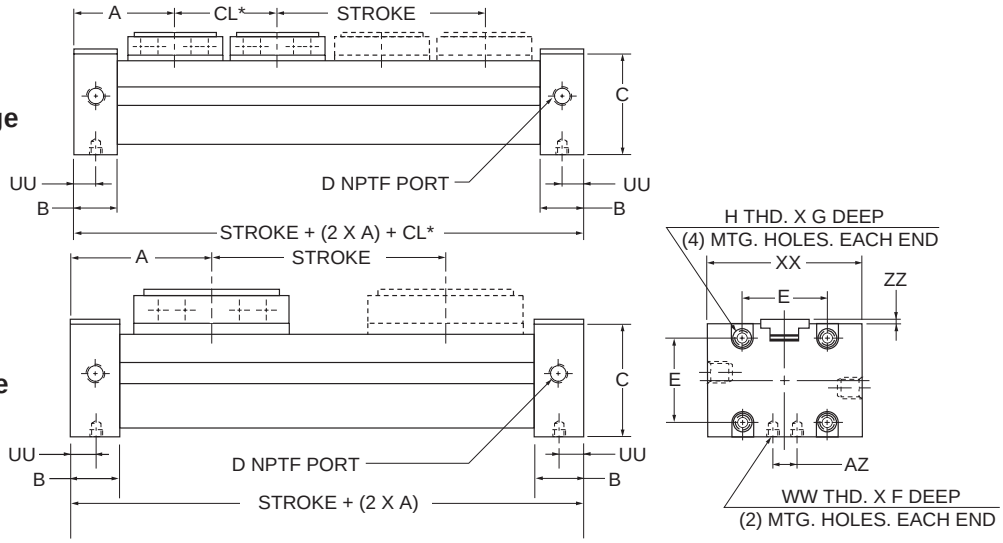


### Single Carriage

See Table 2 for dimensions

* For double carriage mounts, the piston carriages are not connected. The "CL" dimension is the minimum distance between the centerline of each carriage. The "CL" dimension can be increased, depending upon customer mounting. The effective stroke of the cylinder will be decreased by the same distance that the "CL" dimension is increased.

## Foot Mount Dimensions

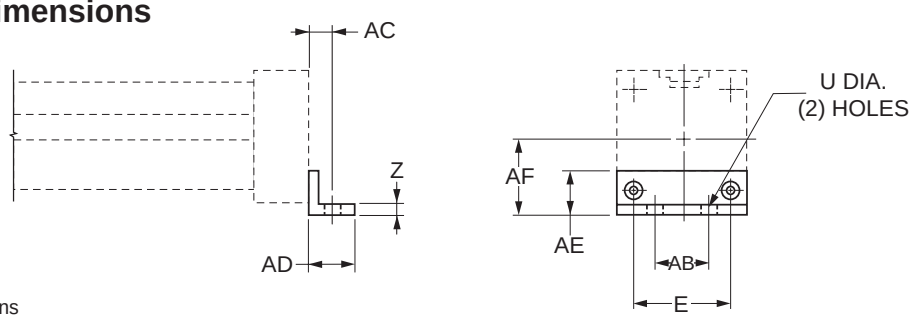


See Table 2 for dimensions

## Table 1 — Envelope and Mounting Dimensions

| Bore | Unit | GG | HH | KK | LL | MM | NN | PP | RR | SS | TT | AR | AS | AW | J | L |
|---|---|---|---|---|---|---|---|---|---|---|---|---|---|---|---|---|
| 25 mm | in. | 1.50 | .19 | 2.05 | 1.50 | .79 | ±.10 | 1.46 | — | 1.25 | .63 | .20 | 1.65 | ±.19 | 4.98 | 1.97 |
| | mm | 38.1 | 4.83 | 52.1 | 38.1 | 20.1 | ±2.54 | 37.1 | — | 31.8 | 16.0 | 5.08 | 41.9 | ±4.83 | 126.5 | 50.0 |
| 32 mm | in. | 1.88 | .19 | 2.60 | 1.89 | 1.18 | ±.16 | 1.90 | — | 2.75 | 1.97 | .32 | 2.28 | ±.31 | 6.56 | 3.94 |
| | mm | 47.8 | 4.83 | 66.0 | 48.0 | 30.0 | ±4.06 | 48.3 | — | 69.9 | 50.0 | 8.13 | 57.9 | ±7.87 | 166.6 | 100.1 |

| Bore | Unit | M | N | O | P | R | S | T | V | DD | DI | DJ | DK | EE | FF | Y |
|---|---|---|---|---|---|---|---|---|---|---|---|---|---|---|---|---|
| 25mm | in. | 1.50 | 1.30 | 0.70 | 1.50 | 0.22 | 1.02 | 0.59 | 0.31 | 3.00 | 3.15 | 0.312 | #10-32 | 1.75 | 2.00 | 0.12 |
| | mm | 38.1 | 33.0 | 17.8 | 38.1 | 5.59 | 25.9 | 14.99 | 7.87 | 76.2 | 80 | 7.9 | — | 44.5 | 50.8 | 3.05 |
| 32mm | in. | 1.89 | 1.57 | 0.97 | 1.89 | 0.28 | 1.26 | 0.72 | 0.47 | 4.50 | 4.73 | 0.50 | 1/4-20 | 2.20 | 2.50 | 1.16 |
| | mm | 48.0 | 39.9 | 24.6 | 48.0 | 7.11 | 32.0 | 18.3 | 12.0 | 114.3 | 120.14 | 12.7 | — | 55.9 | 63.5 | 4.06 |

## Table 2 — Envelope and Mounting Dimensions

| Bore | Unit | A | B | C | D | E | F | G | H | U | AB | AC | AD | AE | AF | AZ | UU | WW | XX | Z | ZZ | Min. CL |
|---|---|---|---|---|---|---|---|---|---|---|---|---|---|---|---|---|---|---|---|---|---|---|
| 25mm | in. | 3.94 | 0.97 | 1.58 | 1/8" NPTF | 1.06 | 0.25 | 0.40 | #10-32 | 0.22 | 1.06 | 0.63 | 0.87 | 0.71 | 0.94 | 0.38 | 0.56 | #10-32 | 2.25 | 0.08 | 0.06 | 4.94 |
| | mm | 100.1 | 24.6 | 40.1 | — | 26.9 | 6.35 | 10.2 | — | 5.5 | 26.9 | 16.0 | 22.1 | 18.1 | 23.9 | 9.7 | 14.2 | — | 57.1 | 2.0 | 1.52 | 125.5 |
| 32mm | in. | 4.92 | 1.00 | 2.09 | 1/4" NPTF | 1.42 | 0.19 | 0.40 | #10-32 | 0.28 | 1.42 | 0.47 | 0.79 | 1.02 | 1.43 | 0.63 | 0.63 | 1/4-20 | 2.25 | 0.13 | 0.05 | 6.84 |
| | mm | 125.0 | 25.4 | 53.1 | — | 36.1 | 4.8 | 10.2 | — | 7.11 | 36.1 | 11.9 | 20.1 | 25.9 | 36.3 | 16.0 | 16.0 | — | 57.1 | 3.3 | 1.27 | 173.7 |







Parker Hannifin Corporation
Parker-Origa
Glendale Heights, Illinois
www.parker.com/pneu/rodless

## Basic Mount – Style D

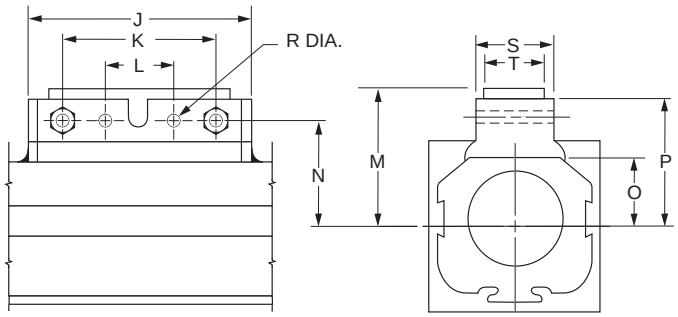


See Table 1 for dimensions

## Basic Mount Long – Style N

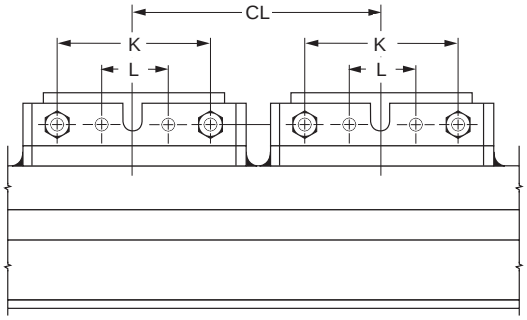


## Flange Mount – Style T

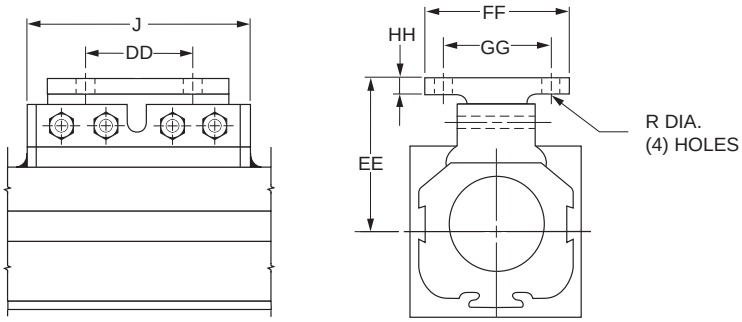


See Table 1 for dimensions

## Flange Mount Long – Style E

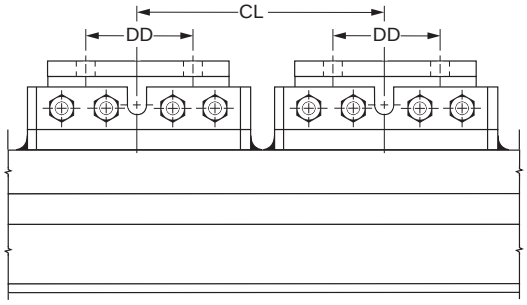


## Swivel Mount – Style A

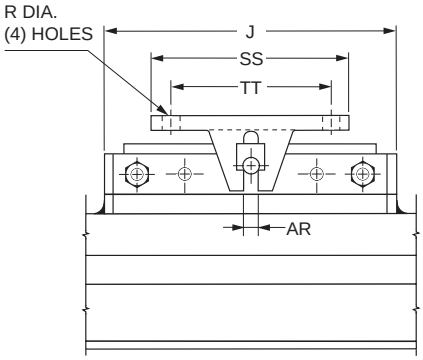


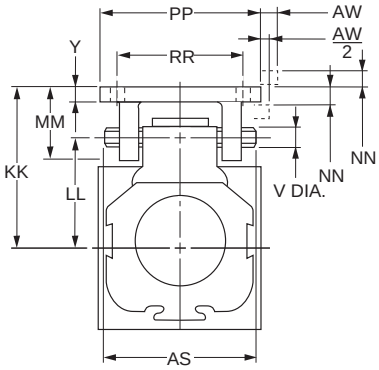


See Table 1 for dimensions





**Parker Hannifin Corporation**
Parker-Origa
Glendale Heights, Illinois
www.parker.com/pneu/rodless

## Mount Dimensions

### Double Carriage

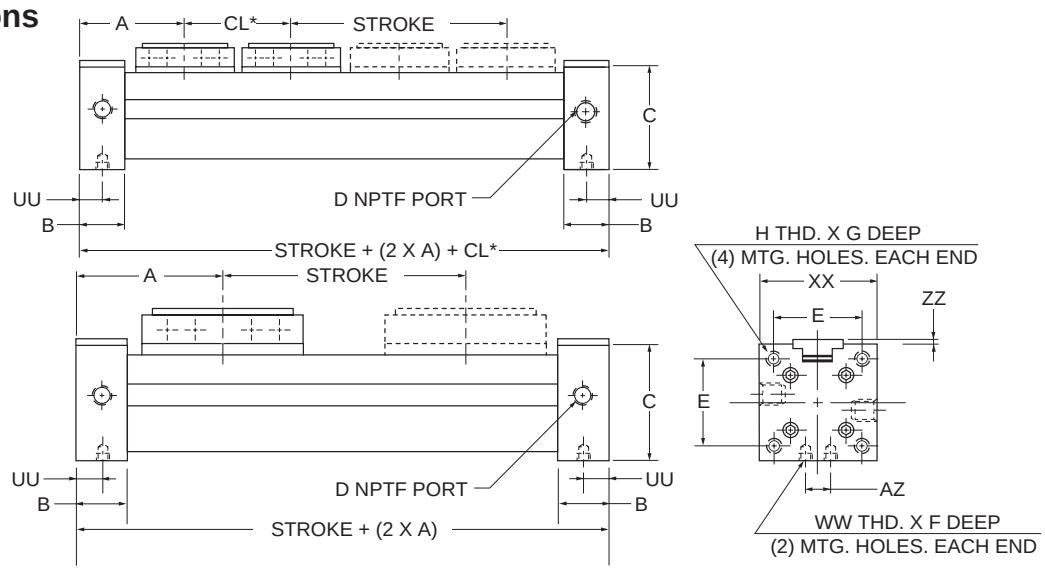


### Single Carriage

* For double carriage mounts, the piston carriages are not connected. The "CL" dimension is the minimum distance between the centerline of each carriage. The "CL" dimension can be increased, depending upon customer mounting. The effective stroke of the cylinder will be decreased by the same distance that the "CL" dimension is increased.

See Table 2 for dimensions

## Foot Mount Dimensions

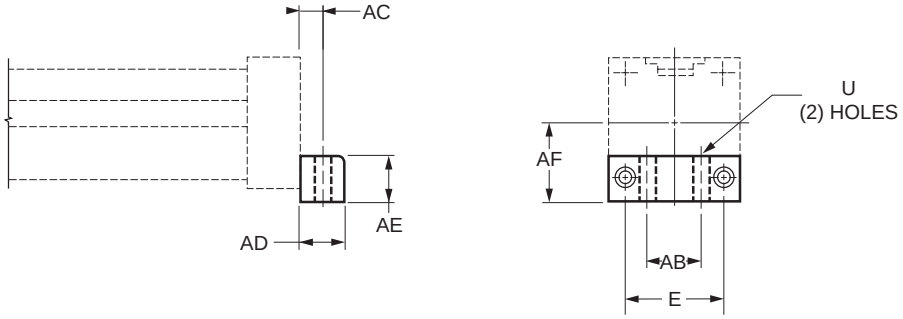


See Table 2 for dimensions

## Table 1. — Envelope and Mounting Dimensions

| Bore | Unit | GG | HH | KK | LL | MM | NN | PP | RR | SS | TT | AR | AS | AW | J |
|---|---|---|---|---|---|---|---|---|---|---|---|---|---|---|---|
| 40mm | in. | 1.77 | 0.24 | 2.95 | 2.00 | 1.50 | .30 | 2.76 | 2.17 | 3.54 | 2.95 | 0.31 | 2.75 | ±30 | 6.16 |
| | mm | 45 | 6 | 75 | 51 | 38 | 8 | 70 | 55 | 90 | 75 | 8 | 70 | ±7.5 | 156 |
| 63mm | in. | 2.36 | 0.28 | 3.87 | 2.81 | 1.72 | .35 | 3.54 | 2.76 | 4.72 | 3.94 | 0.38 | 3.23 | 0.26 | 8.92 |
| | mm | 59.9 | 7.1 | 98.3 | 71.4 | 43.7 | 8.9 | 89.9 | 70.1 | 119.9 | 100.1 | 9.7 | 82.0 | 6.6 | 226.6 |

| Bore | Unit | K | L | M | N | O | P | R | S | T | V | DD | EE | FF | W | Y |
|---|---|---|---|---|---|---|---|---|---|---|---|---|---|---|---|---|
| 40mm | in. | 4.33 | 2.17 | 2.40 | 1.93 | 1.13 | 2.27 | 0.28 | 1.10 | 0.71 | 0.47 | 3.15 | 2.60 | 2.36 | 1.93 | 0.24 |
| | mm | 110 | 55 | 61 | 49 | 28.8 | 57.6 | 7 | 28 | 18 | 12 | 80 | 66 | 60 | 49 | 6 |
| 63mm | in. | 7.09 | 3.54 | 3.27 | 2.68 | 1.79 | 3.07 | 0.35 | 1.19 | 0.74 | 0.63 | 5.12 | 3.51 | 3.15 | 2.68 | 0.25 |
| | mm | 180.1 | 89.9 | 83.1 | 68.1 | 45.5 | 78.0 | 8.9 | 30.2 | 18.8 | 16.0 | 130.0 | 89.2 | 80.0 | 68.1 | 6.4 |

## Table 2. — Envelope and Mounting Dimensions

| Bore | Unit | A | B | C | D | E | F | G | H | U | AB | AC | AD | AE | AF | AZ | UU | WW | XX | CL | ZZ |
|---|---|---|---|---|---|---|---|---|---|---|---|---|---|---|---|---|---|---|---|---|---|
| 40 mm | in. | 5.91 | 1.18 | 2.83 | 1/4 NPT | 2.13 | 0.19 | 0.50 | 1/4-20 | 0.35 | 1.18 | 0.49 | 0.94 | 0.94 | 1350 | 0.63 | 0.59 | 1/4-20 | 2.83 | 8.21 | 0.03 |
| | mm | 150 | 30 | 72 | | 54 | 438 | 12.7 | | 9 | 30 | 12.5 | 24 | 24 | 38 | 16 | 15 | | 72 | 208.6 | 0.76 |
| 63 mm | in. | 8.47 | 1.50 | 4.17 | 3/8 NPT | 3.07 | 0.50 | 0.87 | 5/16-18 | 0.41 | 1.89 | 0.59 | 1.18 | 1.58 | 2.24 | 0.63 | 0.75 | 5/16-18 | 4.17 | 12.18 | 0.01 |
| | mm | 215.1 | 38.1 | 105.9 | | 78 | 12.7 | 22.1 | | 10.4 | 48 | 15.0 | 30 | 40.1 | 56.9 | 16 | 19.1 | | 105.9 | 309.4 | 0.25 |







Parker Hannifin Corporation
Parker-Origa
Glendale Heights, Illinois
www.parker.com/pneu/rodless

C347

## Basic Mount – Style D

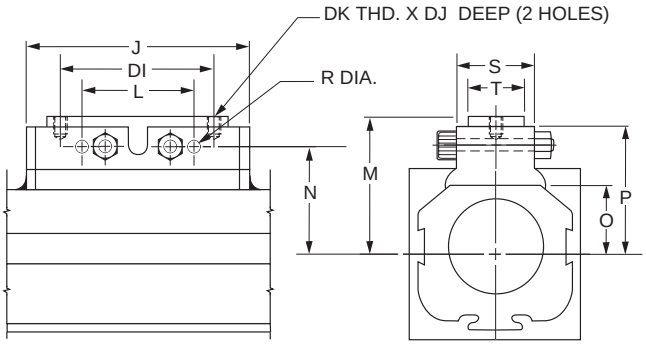


See Table 1 for dimensions

## Basic Mount Double Carriage – Style N

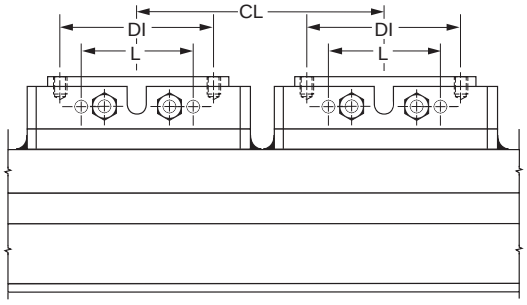


## Flange Mount – Style T

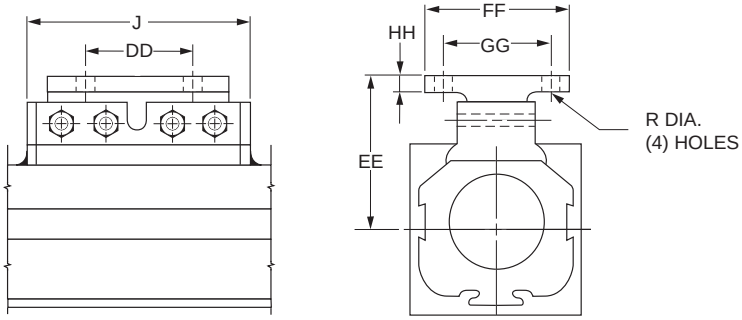


See Table 1 for dimensions

## Flange Mount Double Carriage – Style E

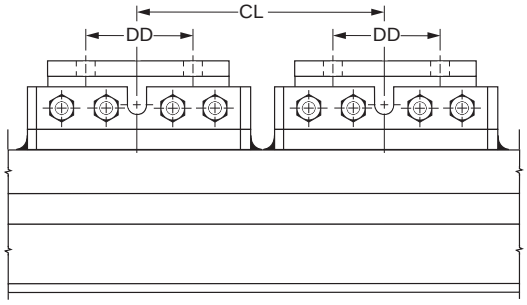


## Swivel Mount – Style A

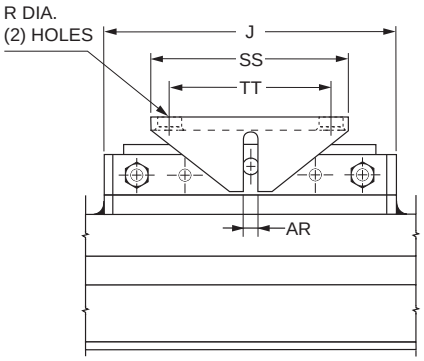


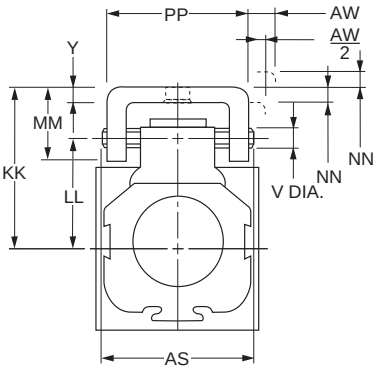


See Table 1 for dimensions

## Mount Dimensions

### Double Carriage

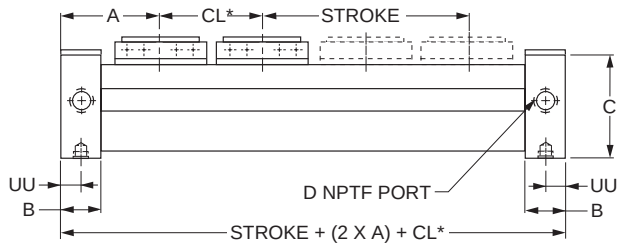


### Single Carriage

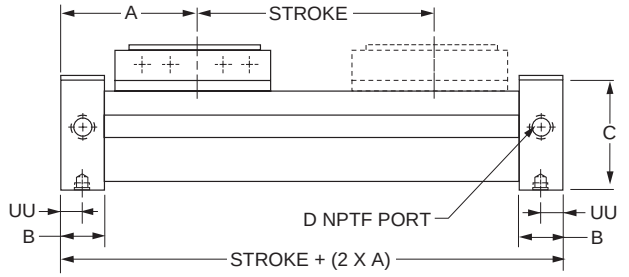


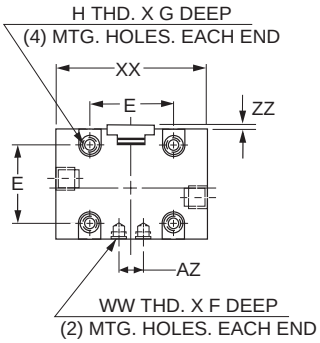


See Table 2 for dimensions

* For double carriage mounts, the piston carriages are not connected. The "CL" dimension is the minimum distance between the centerline of each carriage. The "CL" dimension can be increased, depending upon customer mounting. The effective stroke of the cylinder will be decreased by the same distance that the "CL" dimension is increased.

## Foot Mount Dimensions

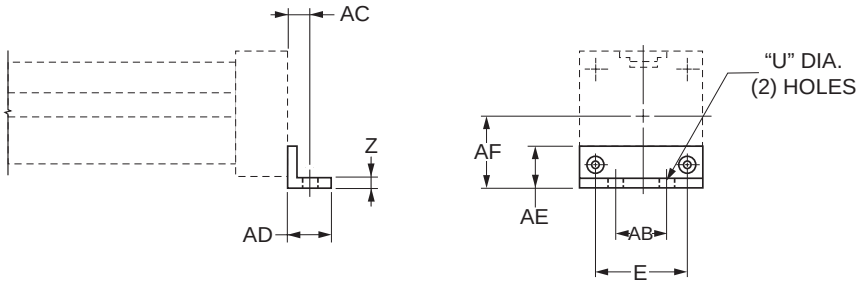


See Table 2 for dimensions

## Table 1. — Envelope and Mounting Dimensions

| Bore | Unit | GG | HH | KK | LL | MM | NN | PP | SS | TT | AR | AS | AW | J | L |
|---|---|---|---|---|---|---|---|---|---|---|---|---|---|---|---|
| 50mm | inch | 2.36 | 0.28 | 3.54 | 2.56 | 1.69 | 0.24 | 2.27 | 3.94 | 3.15 | 0.38 | 2.83 | 0.24 | 8.61 | 5.51 |
| | mm | 59.9 | 7.1 | 89.9 | 65.0 | 42.9 | 6.1 | 57.7 | 100.1 | 80.0 | 9.7 | 71.9 | 6.1 | 218.7 | 140.0 |

| Bore | Unit | M | N | O | P | R | S | T | V | DD | DI | DJ | DK | EE | FF | Y |
|---|---|---|---|---|---|---|---|---|---|---|---|---|---|---|---|---|
| 50mm | inch | 2.56 | 2.17 | 1.41 | 2.56 | 0.35 | 1.34 | 0.74 | 0.63 | 5.12 | 6.30 | 0.69 | 5/16-18 | 3.02 | 3.15 | 0.19 |
| | mm | 65.0 | 55.1 | 35.8 | 65.0 | 8.9 | 34.0 | 18.8 | 16.0 | 130.0 | 160.0 | 17.48 | | 76.7 | 80.0 | 4.8 |

## Table 2. — Envelope and Mounting Dimensions

| Bore | Unit | A | B | C | D | E | F | G | H | U | AB | AC | AD | AE | AF | AZ | UU | WW | XX | Z | ZZ | Min. CL |
|---|---|---|---|---|---|---|---|---|---|---|---|---|---|---|---|---|---|---|---|---|---|---|
| 50 mm | inch | 6.70 | 1.25 | 3.07 | 3/8 NPT | 2.13 | 0.50 | 0.50 | 5/16-18 | 0.35 | 2.13 | 0.71 | 1.10 | 1.34 | 2.01 | 0.63 | 0.63 | 5/16-18 | 3.38 | 0.14 | .16 | 9.9 |
| | mm | 170.1 | 31.75 | 77.97 | | 54.1 | 12.7 | 12.7 | | 8.89 | 54.1 | 18.0 | 27.9 | 34.0 | 51.1 | 16.0 | 16.0 | | 85.9 | 3.6 | 3.96 | 251.5 |







Parker Hannifin Corporation
Parker-Origa
Glendale Heights, Illinois
www.parker.com/pneu/rodless

C347

## Inverted Basic Mount – Style J
25mm & 32mm Bore Sizes

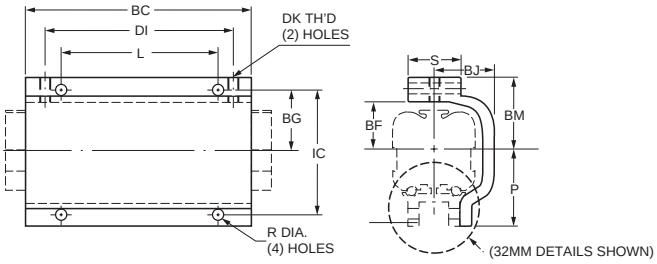


## Inverted Basic Mount Double Carriage – Style B

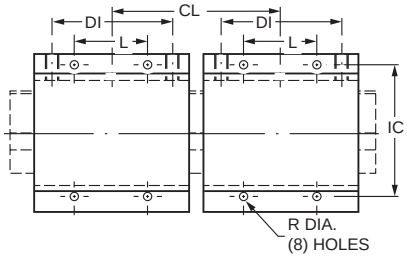


## Inverted Basic Mount – Style J
40mm & 63mm Bore Size

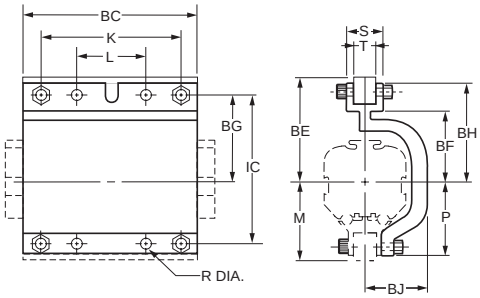


## Inverted Basic Mount Double Carriage – Style B

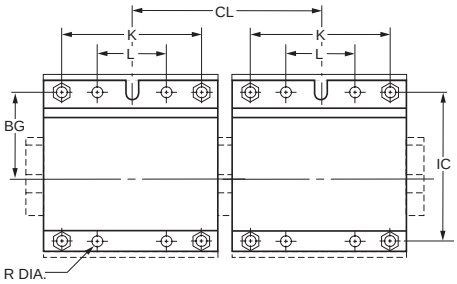


## Inverted Basic Mount – Style J
50mm Bore Size

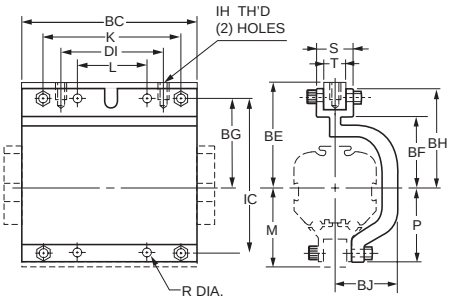


## Inverted Basic Mount Double Carriage – Style B

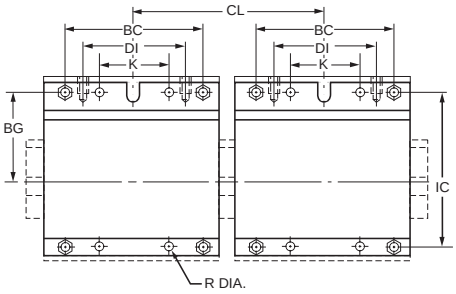


## Inverted Flange Mount – Style L
40mm, 50mm & 63mm Bore Sizes

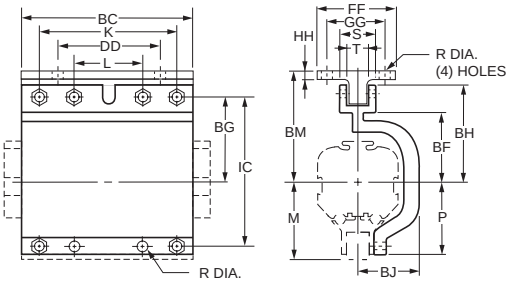


## Inverted Flange Mount Double Carriage – Style K

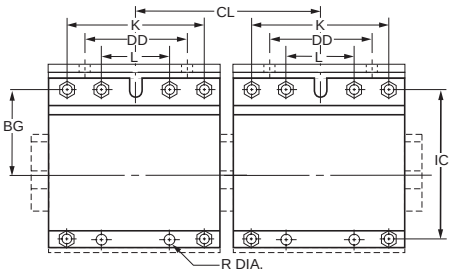




**Parker Hannifin Corporation**
Parker-Origa
Glendale Heights, Illinois
www.parker.com/pneu/rodless

## Inverted Swivel Mount – Style G

40mm, 50mm & 63mm Bore Sizes

**50mm Bore**

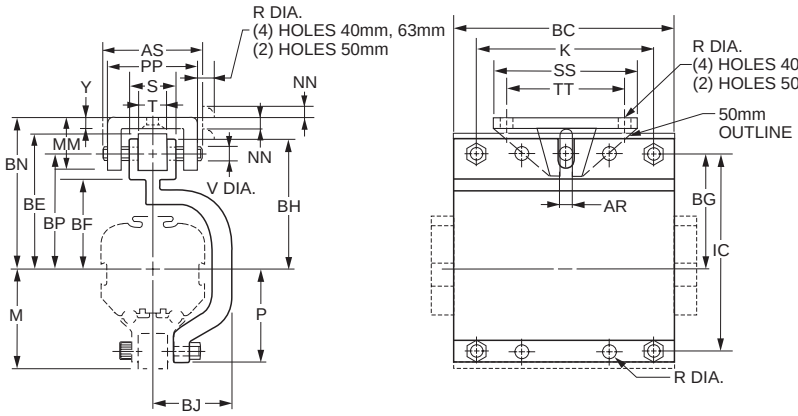


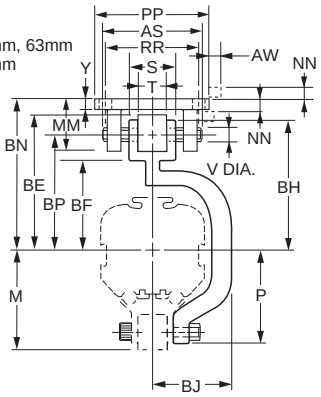


**40 & 63mm Bore**

## Inverted Carriage Mounts – Dimensions

| Bore | Unit | K | L | M | P | R | S | T | V | Y | AR | AS | AW | BC | BE | BF | BG | BH | BJ |
|---|---|---|---|---|---|---|---|---|---|---|---|---|---|---|---|---|---|---|---|
| 25 mm | in. | – | 1.97 | – | 1.50 | 0.22 | 1.02 | – | – | – | – | – | – | 4.25 | – | 1.07 | 1.30 | – | 1.38 |
| | mm | – | 50.0 | – | 38.1 | 5.59 | 25.9 | – | – | – | – | – | – | 107.95 | – | 27.2 | 33 | – | 35.1 |
| 32 mm | in. | – | 3.94 | – | 1.89 | 0.28 | 1.26 | – | – | – | – | – | – | 5.67 | – | 1.25 | 1.57 | – | 1.50 |
| | mm | – | 100.1 | – | 48.0 | 7 | 32 | – | – | – | – | – | – | 144 | – | 31.75 | 39.9 | – | 38.1 |
| 40 mm | in. | 4.33 | 2.17 | 2.40 | 2.27 | 0.28 | 1.10 | 0.71 | 0.47 | 0.24 | 0.31 | 2.75 | ±.30 | 5.43 | 3.34 | 2.31 | 2.87 | 3.19 | 1.99 |
| | mm | 110 | 55 | 61 | 57.6 | 7 | 28 | 18 | 12 | 6 | 8 | 70 | ±7.5 | 137.9 | 84.9 | 58.7 | 72.9 | 81 | 50.5 |
| 50 mm | in. | 5.51 | 3.75 | 2.56 | 2.56 | 0.35 | 1.34 | 0.74 | 0.63 | 0.19 | 0.38 | 2.83 | ±0.24 | 7.24 | 3.63 | 2.46 | 3.24 | 3.63 | 2.56 |
| | mm | 139.9 | 95.25 | 65.0 | 65.0 | 8.9 | 34.0 | 18.8 | 16.0 | 4.8 | 9.7 | 71.9 | ±6.1 | 183.9 | 92.2 | 62.5 | 82.3 | 92.2 | 65.0 |
| 63 mm | in. | 7.09 | 3.54 | 3.27 | 3.07 | 0.35 | 1.19 | 0.74 | 0.63 | 0.21 | 0.38 | 3.23 | ±0.26 | 8.19 | 4.61 | 3.23 | 4.01 | 4.41 | 3 |
| | mm | 180.0 | 89.9 | 83.1 | 78.0 | 8.9 | 30.0 | 18.8 | 16.0 | 5.5 | 9.7 | 82.0 | ±6.6 | 208.0 | 117.1 | 82.0 | 101.9 | 112 | 76.2 |

| Bore | Unit | BM | BN | BP | CL | DD | DI | DJ | DK | FF | GG | HH | IC | MM | NN | PP | RR | SS | TT |
|---|---|---|---|---|---|---|---|---|---|---|---|---|---|---|---|---|---|---|---|
| 25 mm | in. | 1.50 | – | – | 4.94 | – | 3.15 | – | #10-32 | – | – | – | 2.60 | – | – | – | – | – | – |
| | mm | 38.1 | – | – | 125.5 | – | 80 | – | | – | – | – | 66 | – | – | – | – | – | – |
| 32 mm | in. | 1.89 | – | – | 6.84 | – | 4.73 | – | 1/4-20 | – | – | – | 3.14 | – | – | – | – | – | – |
| | mm | 48.0 | – | – | 173.7 | – | 120.14 | – | | – | – | – | 79.8 | – | – | – | – | – | – |
| 40 mm | in. | 3.54 | 3.89 | 2.95 | 8.2 | 3.15 | – | – | – | 2.36 | 1.77 | 0.24 | 4.80 | 1.50 | ±0.30 | 2.76 | 2.17 | 3.54 | 2.95 |
| | mm | 89.92 | 98.81 | 74.93 | 208.6 | 80 | – | – | – | 60 | 45 | 6 | 122 | 38 | ±8 | 70 | 55 | 90 | 75 |
| 50 mm | in. | 4.09 | 4.61 | 3.63 | 9.90 | 5.12 | 6.3 | 0.69 | 5/16-18 | 3.15 | 2.36 | 0.28 | 5.41 | 1.69 | ±0.24 | 2.27 | – | 3.94 | 3.15 |
| | mm | 103.9 | 117.1 | 92.2 | 251.5 | 130.0 | 160.0 | 17.48 | | 80.0 | 59.9 | 7.1 | 137.4 | 42.9 | ±6.1 | 57.7 | – | 100.1 | 80.0 |
| 63 mm | in. | 4.85 | 5.21 | 4.15 | 12.18 | 5.12 | – | – | – | 3.15 | 2.36 | 0.28 | 6.69 | 1.72 | ±0.35 | 3.54 | 2.76 | 4.72 | 3.94 |
| | mm | 123.2 | 132.3 | 105.4 | 309.4 | 130.0 | – | – | – | 80.0 | 59.9 | 7.1 | 169.9 | 43.7 | ±8.9 | 89.9 | 70.1 | 119.9 | 100.1 |







**Parker Hannifin Corporation**
Parker-Origa
Glendale Heights, Illinois
www.parker.com/pneu/rodless

## Sensors

Solid state and reed sensors are available for use with the RC Series Cylinders. See the Electronic Sensors Section for specifications and part numbers.

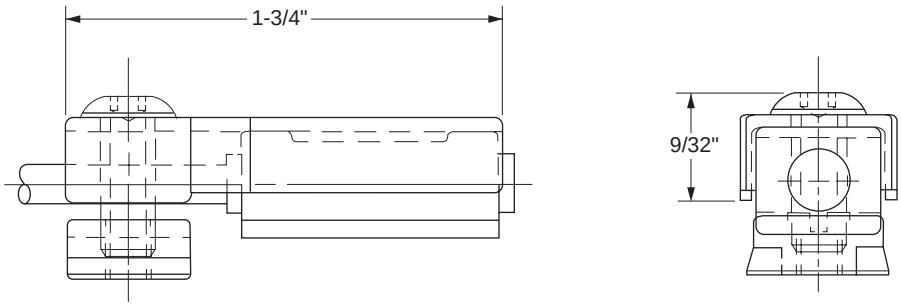




## Service Kits

| | | Bore Size (mm) | | | | |
|---|---|---|---|---|---|---|
| | | **25** | **32** | **40** | **50** | **63** |
| Outer Band | Single Carriage | L078470025 | L078470032 | L078470040 | L078470050 | L078470063 |
| | Double Carriage | L078480025 | L078480032 | L078480040 | L078480050 | L078480063 |
| Inner Band | Single Carriage | L078450025 | L078450032 | L078450040 | L078450050 | L078450063 |
| | Double Carriage | L078460025 | L078460032 | L078460040 | L078460050 | L078460063 |
| | Piston Assembly | 1468750250 | 1468750320 | 1468750400 | 1468750500 | 1468750630 |



**Parker Hannifin Corporation**
Parker-Origa
Glendale Heights, Illinois
www.parker.com/pneu/rodless