P5E Series

P1D ISO Guided Cylinders

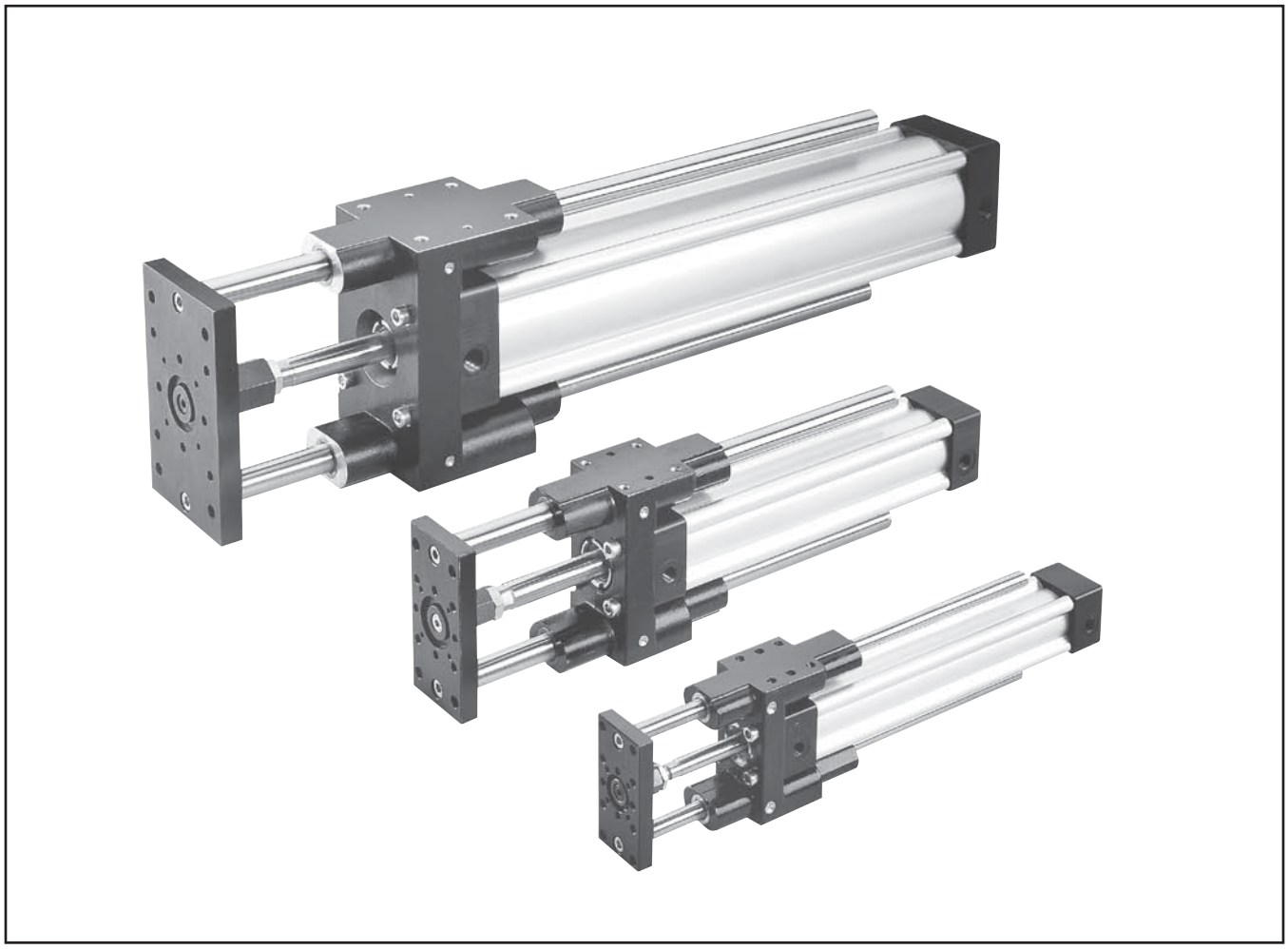

F

P5T

P5T2

P5L

HB

P5E

Contents

Features F146
Ordering Information..... F147
Specifications F148
Engineering Data..... F149-F154
Dimensions..... F155-F156
Rod Lock Options F157-F159
Bumpers F160
Sensors F160
Mounting Kits..... F161
Service Kits F162

800.696.6165 www.comoso.com

Parker Hannifin Corporation
Pneumatic Division
Wadsworth, Ohio
www.parker.com/pneumatics

F

Support Shafts
Chrome plated, case hardened support shafts are machined from high carbon alloy steel. Stainless steel and oversized shafting are available.

Cast Aluminum Body
Lightweight, unitized design provides strength and 3 mounting faces.

Bushings
Composite bushings are standard. Composite bushings with oversize shafting are optional. Optional sealed recirculating ball bearings with stainless steel shafts provide precise alignment with very low friction and wear.

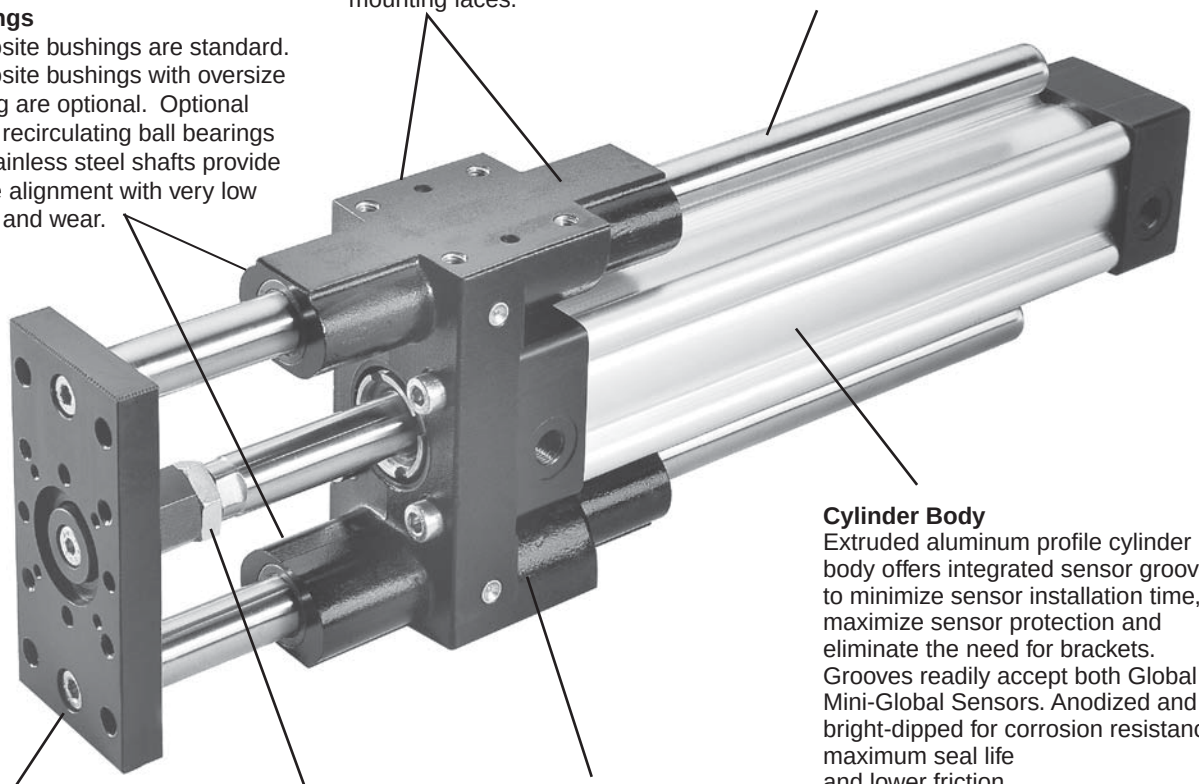

Cylinder Body
Extruded aluminum profile cylinder body offers integrated sensor grooves to minimize sensor installation time, maximize sensor protection and eliminate the need for brackets. Grooves readily accept both Global and Mini-Global Sensors. Anodized and bright-dipped for corrosion resistance, maximum seal life and lower friction.

Cylinder Mounting
Conforms to ISO 6431, ISO/DIS 15552, VDMA 24562 and AFNOR standards

Tooling Plate
Precision machined and anodized, the aluminum tooling plate allows mounting on two sides. Dowel pin holes provide accurate mounting.

Alignment Coupler
Allows piston rod to self-center, thus increasing cylinder life, especially when the support shafts deflect under load.

Parker Hannifin Corporation
Pneumatic Division
Wadsworth, Ohio
www.parker.com/pneumatics

800.696.6165 www.comoso.com

Model Number Code
Example: P5E-J032FGN0250

P5E	–	J	032	F	G	N	0250

Shaft / Bearing Type

J	Composite Bearing, Chrome Plated Standard Shaft
M	Composite Bearing , Chrome Plated Oversize Shaft [1]
C	Composite Bearing, Stainless Steel Shaft
H	Ball Bearing, Stainless Steel Shaft

Bore Size

032	32mm
040	40mm
050	50mm
063	63mm
080	80mm
100	100mm

Cylinder Type [3]

F	P1D Removable Gland Cylinder
G	P1D Removable Gland Cylinder with Cushions
K	P1D Rod Lock Cylinder with Cushions
S	P1D Manual Override Rod Lock Cylinder with Cushions
Q	No Cylinder
X	Special – please specify

Port Style

H	NPTF (Std)
G	BSPP
N	NPTF with Flow Controls (Std. Female Ports)
B	BSPP with Flow Controls (ISO Female Ports)
F	Flow Controls, NPTF Port, Prestolok Tube (inch)
P	Flow Controls, BSPP Port, Prestolok Tube (mm)

Bumpers / Adjustable Stop Collars

N	None
B	Bumpers, retract only [2]
E	Bumpers and Adjustable Stop Collars, extend only
T	Bumpers both ends, Adjustable Stop Collars on extend [2]
R	Bumpers and Adjustable Stop Collars on retract [2]
S	Bumpers and Adjustable Stop Collars both ends [2]

Stroke

Specify whole millimeters, i.e. 0250 = 250mm stroke

1 Bumpers and adjustable stop collars are not available with oversize shaft option.

2 These options will increase the cylinder length. To achieve a specific usable stroke length with these options, add the corresponding value(s) in the Adder table on page F156 to the desired stroke length. See Bumper Options for explanation.

Adders are not used when P1D Rod Lock (K) or P1D Manual Override Rod Lock (S) are specified with bumpers.

3 Tie Rod Version or composite piston option must be specified as Special (X).

Parker Hannifin Corporation
Pneumatic Division
Wadsworth, Ohio
www.parker.com/pneumatics

800.696.6165 www.comoso.com

Specifications

- Maximum Operating Pressure: 145 PSI (10 Bar)
- Support Shaft Sizes: ∅12 to 30mm
- Cylinder Mounting: ISO 6431, ISO/DIS 15552, VDMA 24 562 and AFNOR standards
- Mounting: Unrestricted
- Operating Temperature Range: -10°C to +74°C (14°F to 165°F)
- Filtration Requirement: 40 micron, dry filtered air

Quick Reference Data

Model (Bore Size)	Piston Rod (mm)	Bushings	Support Shafts (mm)	Piston Bore Area Non-Rod Side		Max.* Stroke (mm)	Theoretical Force		Weights	
				(mm^2)	(in^2)		Extend @80 PSI (5.5 Bar), N (lb)	Retract @80 PSI (5.5 Bar), N (lb)	Base Weight, kg (lb)	Per 100 mm Stroke, kg (lb)
32	16	Standard	12	804	1.25	500	444 (100)	334 (75)	0.97 (2.14)	0.175 (0.39)
		Oversized	16							
40	16	Standard	16	1257	1.95	625	694 (156)	583 (131)	1.55 (3.41)	0.315 (0.69)
		Oversized	20							
50	20	Standard	20	1964	3.04	775	1081 (243)	907 (204)	2.56 (5.64)	0.495 (1.09)
		Oversized	25							
63	20	Standard	20	3117	4.83	950	1717 (386)	1544 (347)	3.57 (7.84)	0.495 (1.09)
		Oversized	25							
80	25	Standard	25	5027	7.79	1150	2771 (623)	2500 (562)	6.53 (14.4)	0.770 (1.70)
		Oversized	30							
100	25	Standard	25	7854	12.17	1350	4333 (974)	4061 (913)	8.76 (19.32)	0.770 (1.70)
		Oversized	30							

* Ball bearings suggested on long-stroke applications. Consult factory for longer strokes.

Maximum Load Capacity with Standard Shaft

The following curves are based on 10 million cycles at a speed of 0.20 m/s (40 fpm). Higher dynamic loads will reduce cycle life. For static conditions, multiply the information in the graphs by 1.5.

EXAMPLE: A P5E with 40mm bore, composite bushings and a “stroke+d” of 400mm will have a load capacity of 48N.

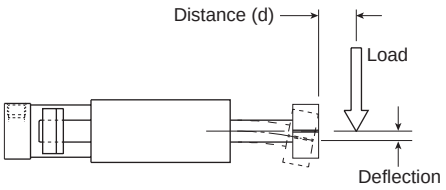

32mm Bore Size

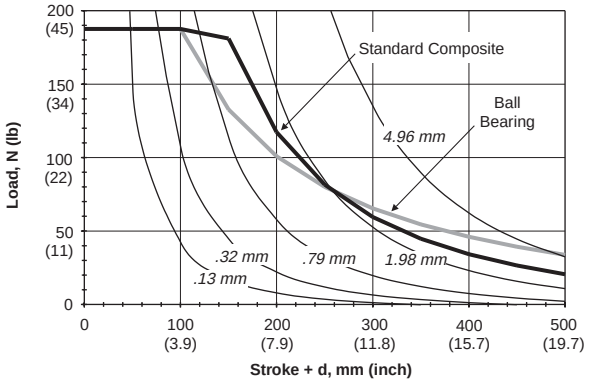

40mm Bore Size

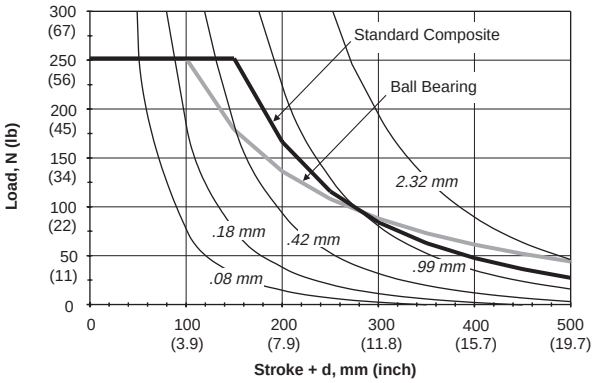

50mm Bore Size

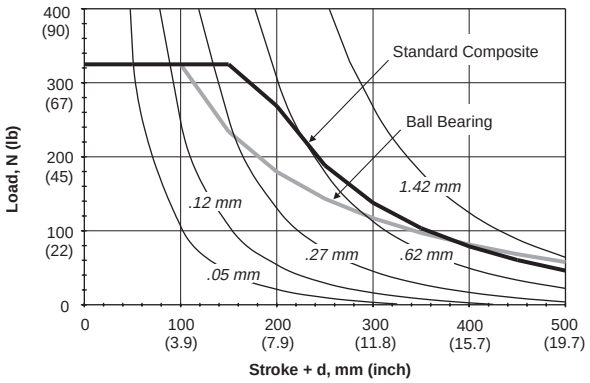

63mm Bore Size

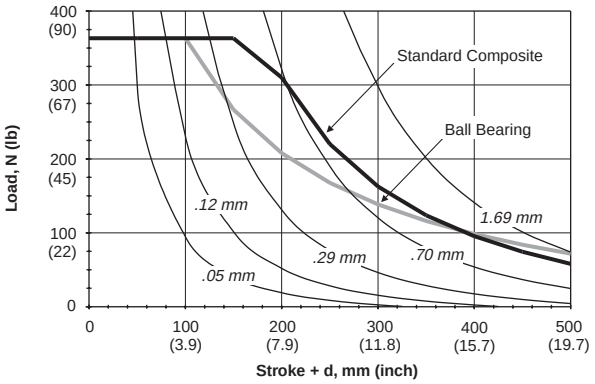

80mm Bore Size

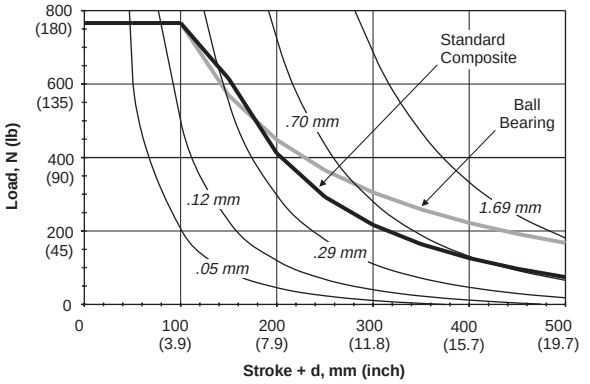

100mm Bore Size

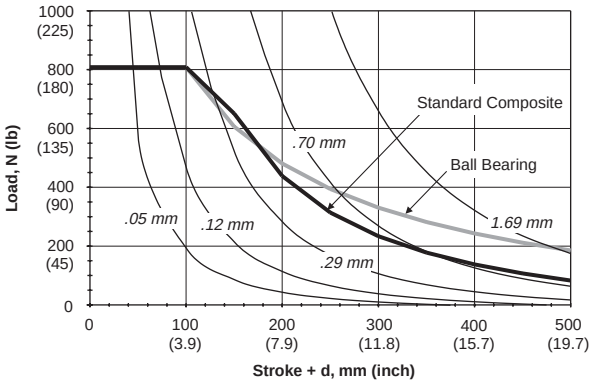

800.696.6165
www.comoso.com
Parker Hannifin Corporation
Pneumatic Division
Wadsworth, Ohio
www.parker.com/pneumatics

Maximum Load Capacity with Oversized Shaft

The following curves are based on 10 million cycles at a speed of 0.20 m/s (40 fpm). Higher dynamic loads will reduce cycle life. For static conditions, multiply the information in the graphs by 1.5.

EXAMPLE: A P5E with 63mm bore, oversized support shafts and a “stroke+d” of 300mm would have a load capacity of 200N.

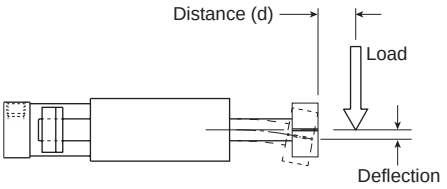

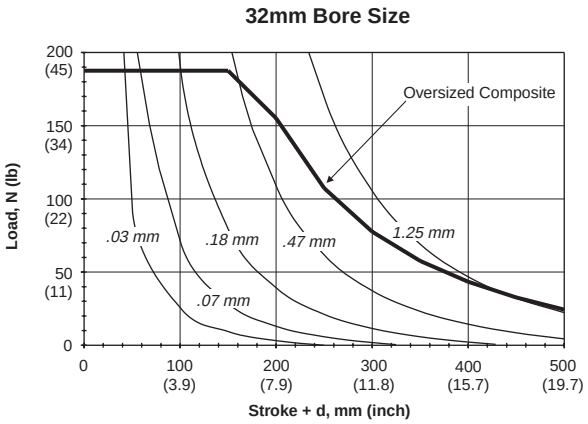

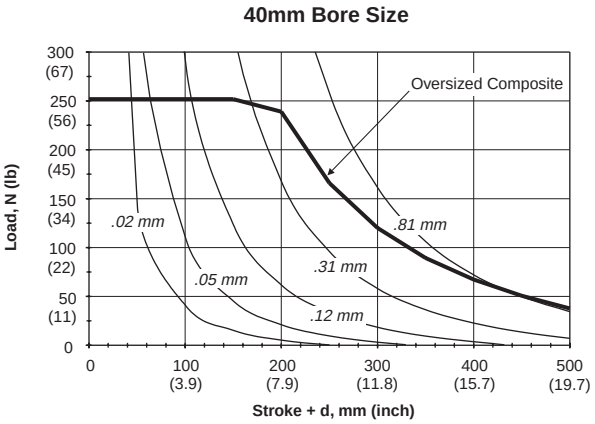

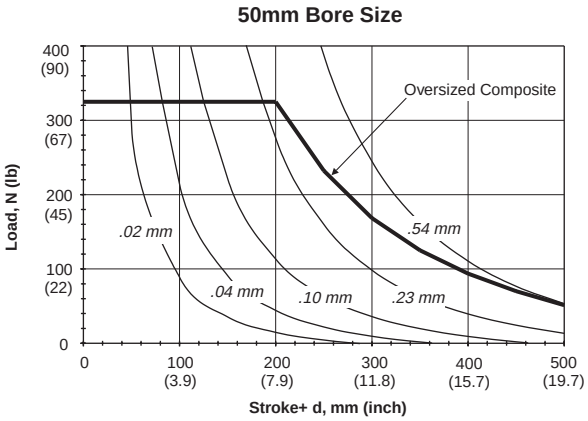

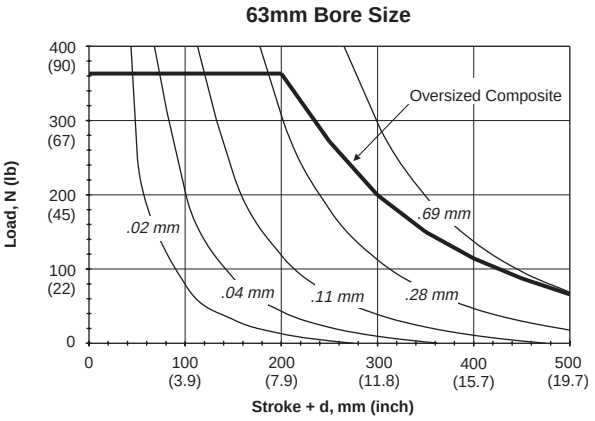

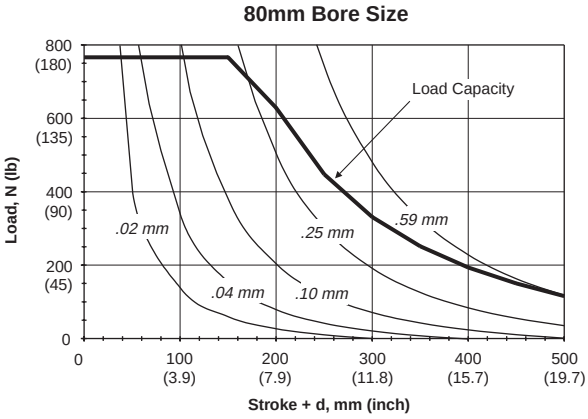

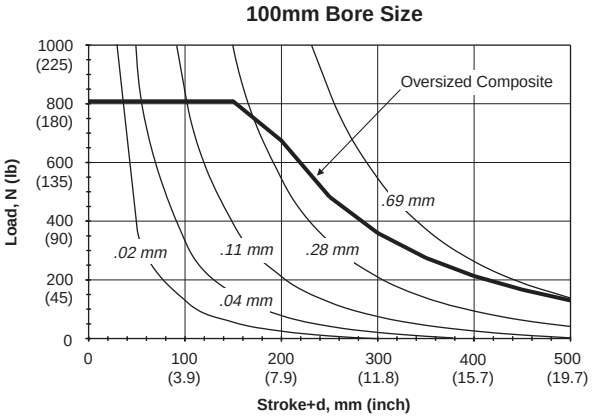

Parker Hannifin Corporation
Pneumatic Division
Wadsworth, Ohio
www.parker.com/pneumatics

800.696.6165 www.comoso.com

Symmetrical Torque Capacity with Standard Shaft

These curves provide the maximum permissible torsional load vs. stroke for various slide sizes. The data presented is based on a bearing life equivalent to 10 million cycles for dynamic conditions. Higher dynamic torques will reduce cycle life. For static conditions, multiply the information in the graphs by 1.5.

EXAMPLE: A P5E with 100mm bore, composite bushings and a “stroke + d” of 300mm would have a torque capacity of 20 Nm.

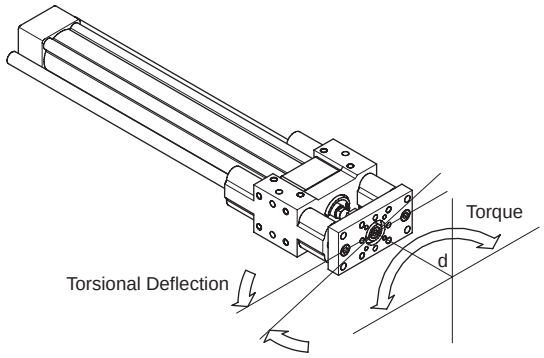

32mm Bore Size

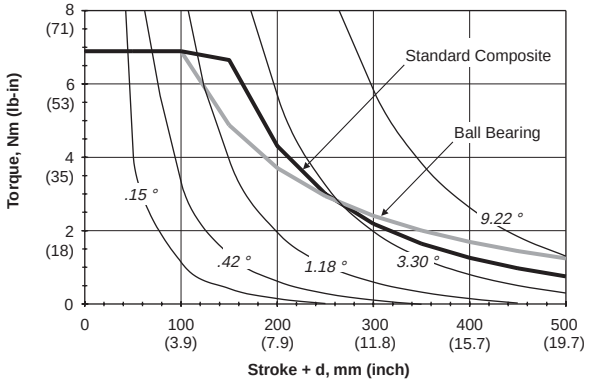

40mm Bore Size

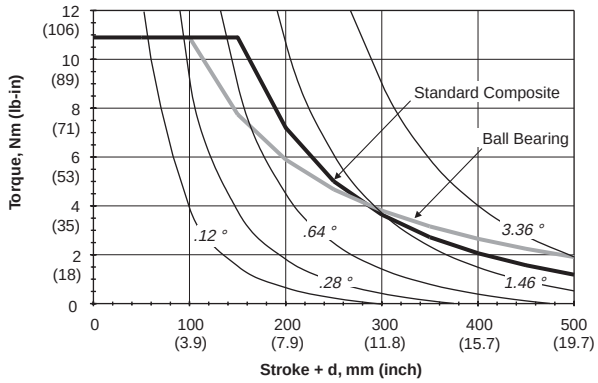

50mm Bore Size

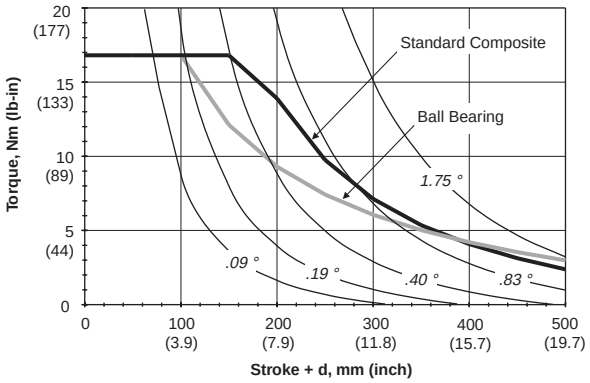

63mm Bore Size

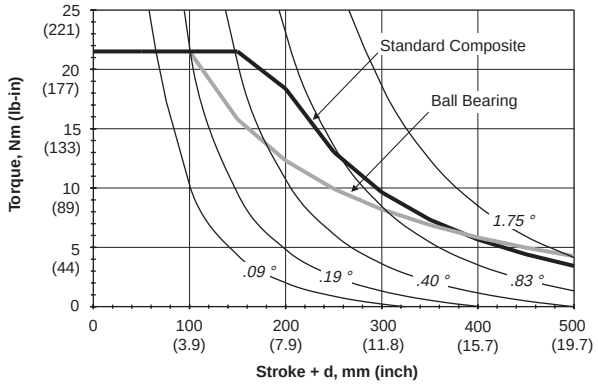

80mm Bore Size

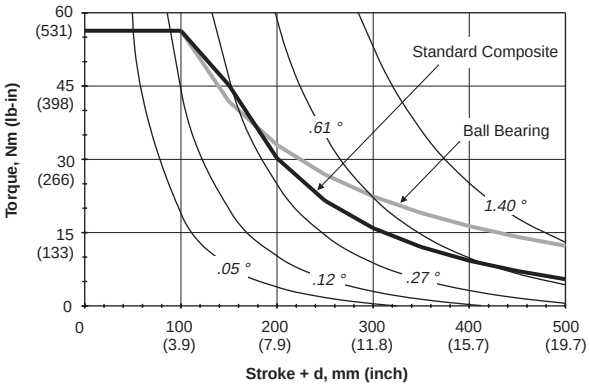

100mm Bore Size

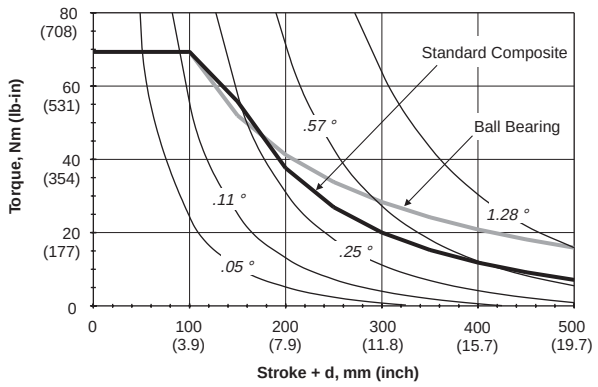

Parker Hannifin Corporation
Pneumatic Division
Wadsworth, Ohio
www.parker.com/pneumatics

800.696.6165 www.comoso.com

Symmetrical Torque Capacity with Oversized Shaft

These curves provide the maximum permissible torsional load vs. stroke for various slide sizes. The data presented is based on a bearing life equivalent to 10 million cycles for dynamic conditions. Higher dynamic torques will reduce cycle life. For static conditions, multiply the information in the graphs by 1.5.

EXAMPLE: A P5E with 50mm bore, oversized support shafts and a “stroke + d” of 400mm would have a torque capacity of 5 Nm.

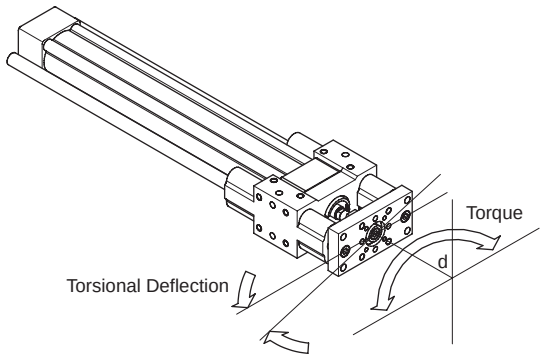

32mm Bore Size

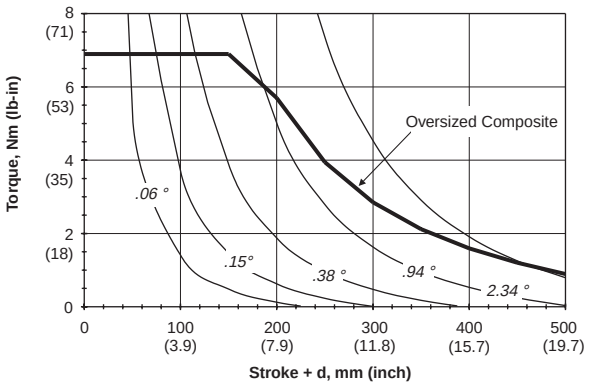

40mm Bore Size

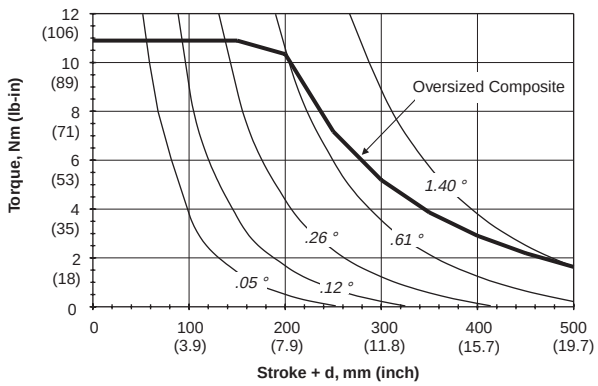

50mm Bore Size

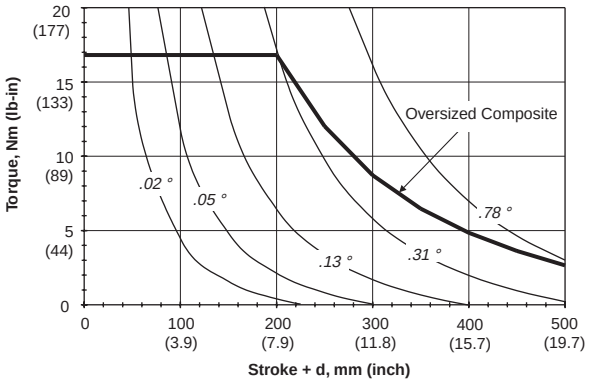

63mm Bore Size

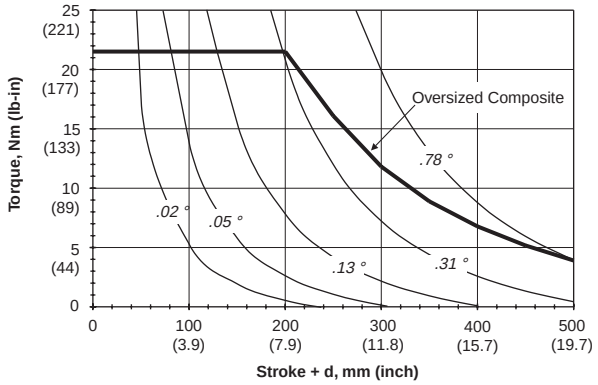

80mm Bore Size

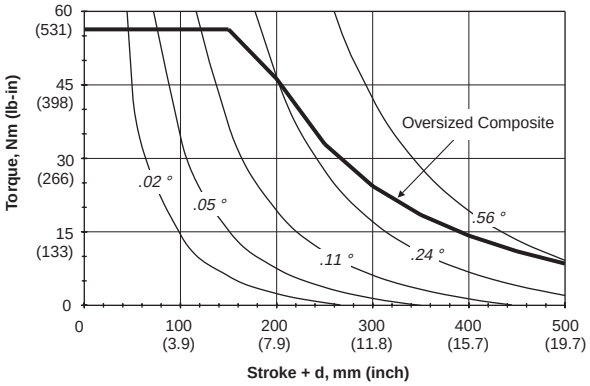

100mm Bore Size

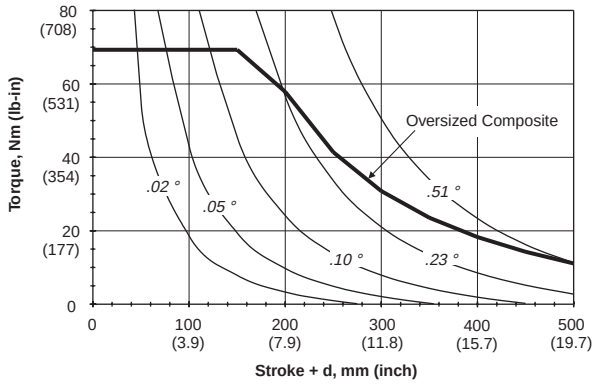

Parker Hannifin Corporation
Pneumatic Division
Wadsworth, Ohio
www.parker.com/pneumatics

800.696.6165 www.comoso.com

Asymmetrical Torque Capacity

Asymmetrical loading occurs when an off-center load is applied to the unit. P5E Series units can resist torsional loads that are asymmetrical.

EXAMPLE: A P5E with 63mm bore, ball bearings and a "stroke + d" of 300mm would have an asymmetrical torque capacity of 5 Nm.

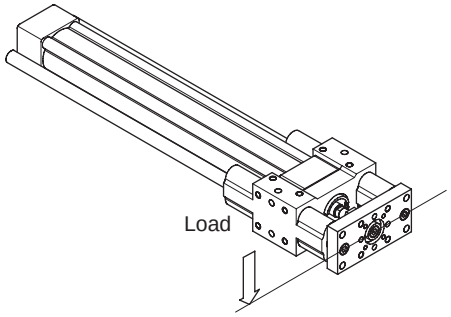

32mm Bore Size

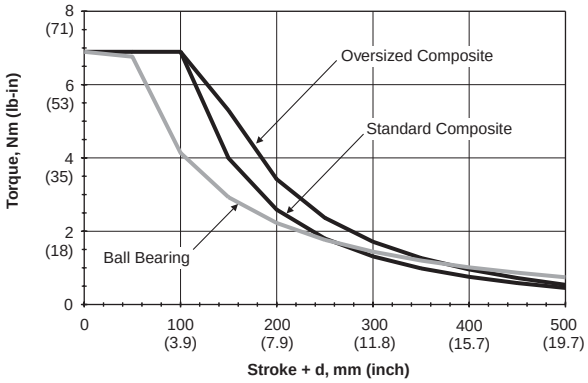

40mm Bore Size

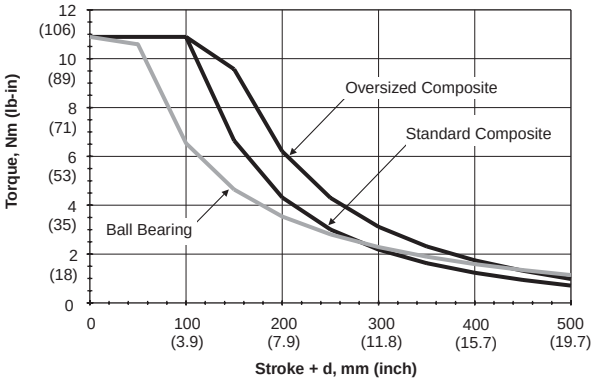

50mm Bore Size

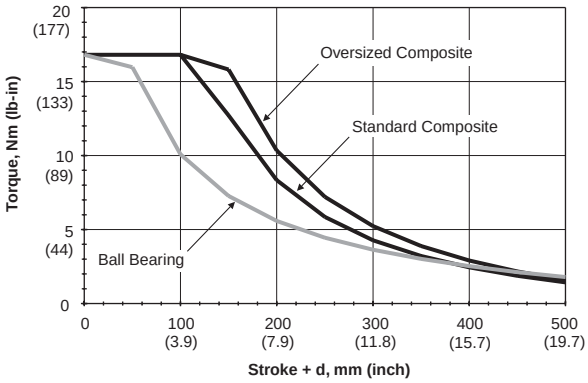

63mm Bore Size

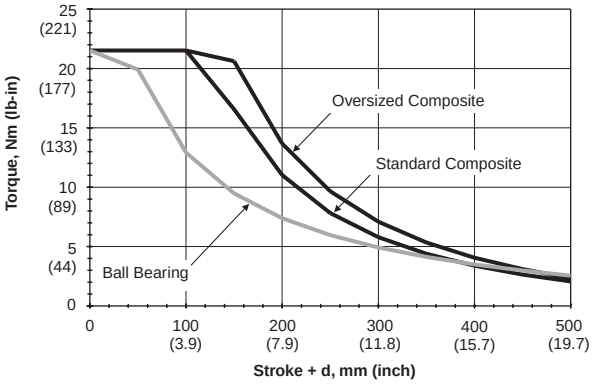

80mm Bore Size

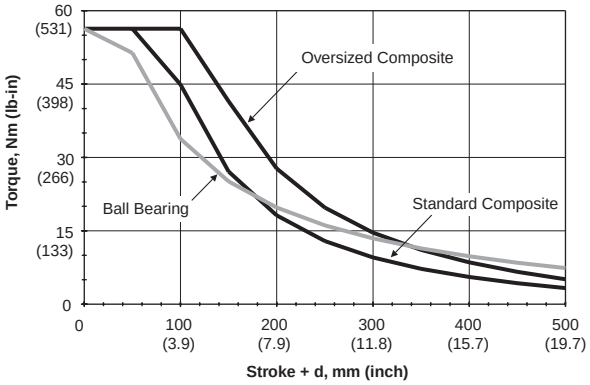

100mm Bore Size

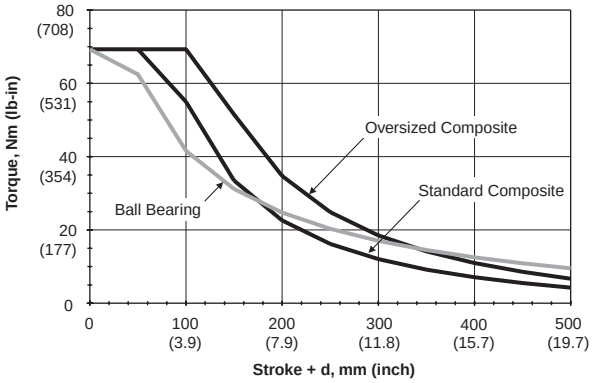

Parker Hannifin Corporation
Pneumatic Division
Wadsworth, Ohio
www.parker.com/pneumatics

800.696.6165 www.comoso.com

Vertical Eccentric Load Capacity

P5E Series units mounted vertically will have the same eccentric load capacity regardless of orientation. The graphs provide maximum load capacity for an eccentric mounted load. The load is assumed to be mounted at the face of the tooling plate.

These load curves illustrate load ratings based on the bearing system of the product. Load rating is a key selection criterion but is not the only one to consider in the selection of a product.

Note: Charts are based on 100mm of stroke.

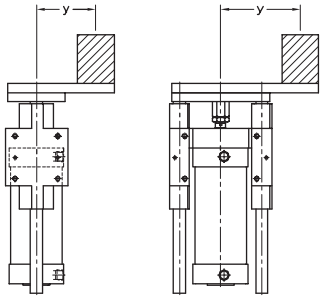

EXAMPLE: A P5E with a 40mm bore carrying an eccentric load located 300mm from the centerline has a capacity of approximately 200N (45 lbs).

32mm Bore Size

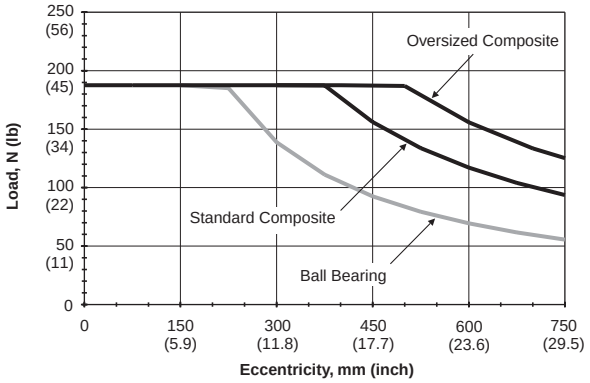

40mm Bore Size

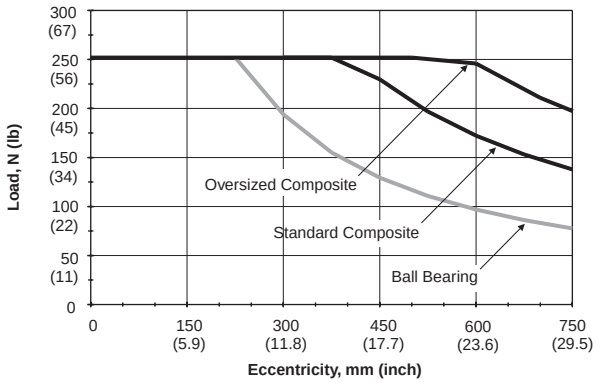

50mm Bore Size

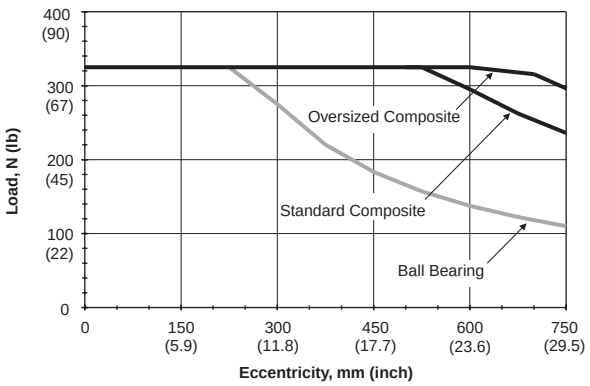

63mm Bore Size

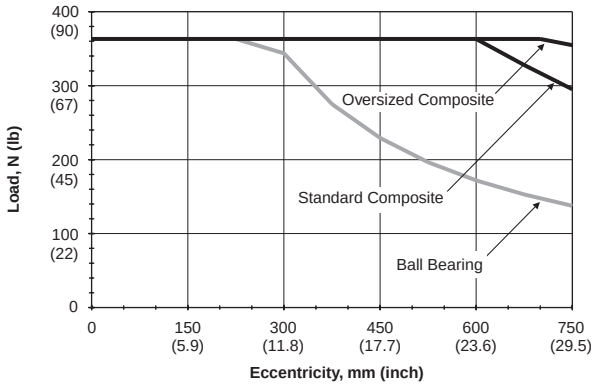

80mm Bore Size

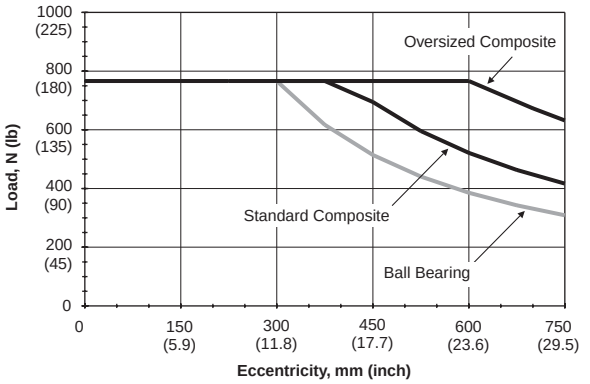

100mm Bore Size

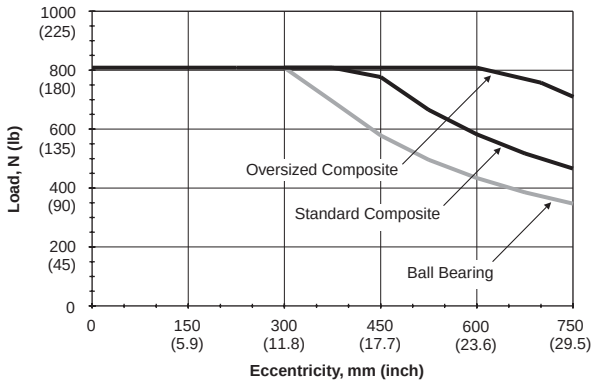

Basic Dimensions

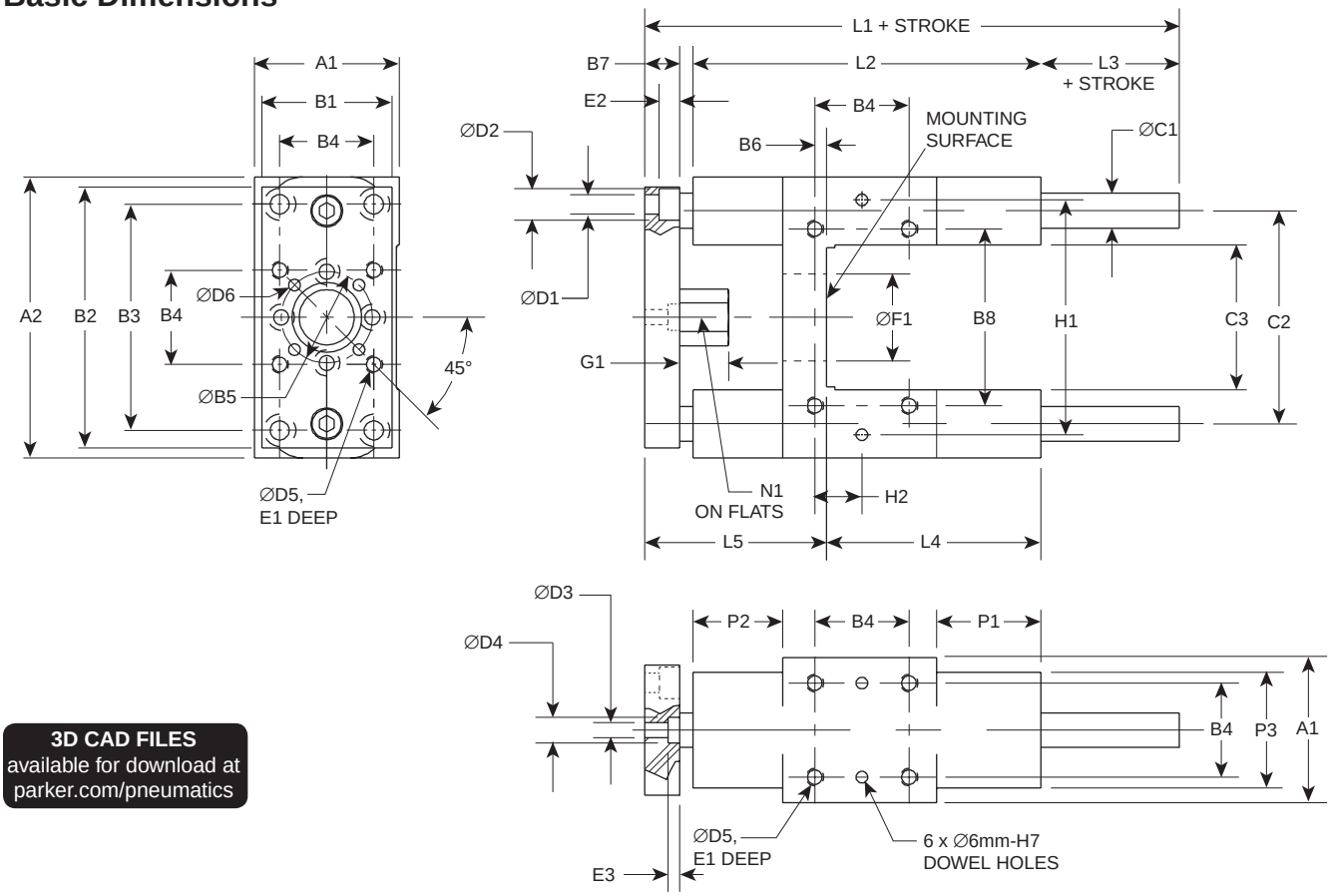

3D CAD FILES
available for download at
parker.com/pneumatics

Dimensions, mm (inch)

Bore	A1	A2	B1	B2	B3	B4	ØB5	B6	B7	B8	ØC1 Std.	ØC1 O.S.	C2	C3	ØD1	ØD2	ØD3	ØD4	ØD5	ØD6
32	50 (1.97)	97 (3.82)	45 (1.77)	92 (3.62)	78 (3.07)	32.5 (1.28)	31.5 (1.24)	4 (0.16)	12.7 (0.50)	61 (2.40)	12 (0.47)	16 (0.63)	73.5 (2.89)	50 (1.97)	6.6 (0.26)	11 (0.43)	5.2 (0.20)	9 (0.35)	M6 x 1.00	4 (0.16)
40	58 (2.28)	115 (4.53)	50.8 (2.00)	110 (4.33)	84 (3.31)	38 (1.50)	31.5 (1.24)	11 (0.43)	12.7 (0.50)	69 (2.72)	16 (0.63)	20 (0.79)	86.5 (3.41)	58 (2.28)	6.6 (0.27)	11 (0.43)	5.2 (0.20)	9 (0.35)	M6 x 1.00	4 (0.16)
50	70 (2.76)	137 (5.39)	63 (2.48)	132 (5.20)	100 (3.94)	46.5 (1.83)	50 (1.97)	19 (0.75)	16 (0.63)	85 (3.35)	20 (0.79)	25 (0.98)	103.5 (4.07)	70 (2.76)	9 (0.35)	14 (0.55)	6.4 (0.25)	11 (0.43)	M8 x 1.25	4 (0.16)
63	85 (3.35)	152 (5.98)	82.5 (3.25)	145 (5.71)	105 (4.13)	56.5 (2.24)	50 (1.97)	15 (0.59)	16 (0.63)	100 (3.94)	20 (0.79)	25 (0.98)	118.5 (4.67)	85 (3.35)	9 (0.35)	14 (0.55)	6.4 (0.25)	11 (0.43)	M8 x 1.25	4 (0.16)
80	105 (4.13)	189 (7.44)	100 (3.94)	180 (7.09)	130 (5.12)	72 (2.83)	76 (2.99)	21 (0.83)	19 (0.75)	130 (5.12)	25 (0.98)	30 (1.18)	147 (5.79)	105 (4.13)	11 (0.43)	17 (0.67)	8.4 (0.33)	14 (0.55)	M10 x 1.50	6 (0.24)
100	130 (5.12)	213 (8.39)	120 (4.72)	200 (7.87)	150 (5.91)	89 (3.50)	76 (2.99)	24.5 (0.97)	19 (0.75)	150 (5.91)	25 (0.98)	30 (1.18)	171.5 (6.75)	130 (5.12)	11 (0.43)	17 (0.67)	8.4 (0.33)	14 (0.55)	M10 x 1.50	6 (0.24)

Bore	E1	E2	E3	ØF1	G1	H1	H2	L1	L2	L3	L4	L5	N1	P1	P2	P3	Port Size NPT/ BSPP	Piston Rod Thread
32	12 (0.47)	7 (0.28)	4 (0.16)	30 (1.18)	17 (0.67)	81 (3.19)	16 (0.63)	153 (6.02)	120 (4.72)	17 (0.67)	71 (2.80)	64.7 (2.55)	17 (0.67)	36 (1.42)	31 (1.22)	40 (1.57)	1/8	M10 x 1.25
40	12 (0.47)	7 (0.28)	4 (0.16)	35 (1.38)	24 (0.94)	99 (3.90)	19 (0.75)	166 (6.54)	130 (5.12)	20 (0.79)	71 (2.80)	74.7 (2.94)	17 (0.67)	36 (1.42)	36 (1.42)	44 (1.73)	1/4	M12 x 1.25
50	16 (0.63)	9 (0.35)	9 (0.35)	40 (1.57)	27 (1.06)	119 (4.69)	23 (0.91)	194 (7.64)	150 (5.90)	25 (0.98)	79 (3.11)	90 (3.54)	24 (0.94)	42 (1.65)	44 (1.73)	50 (1.97)	1/4	M16 x 1.5
63	16 (0.63)	9 (0.35)	9 (0.35)	45 (1.77)	27 (1.06)	132 (5.20)	28 (1.10)	224 (8.82)	180 (7.09)	25 (0.98)	109 (4.29)	90 (3.54)	24 (0.94)	58 (2.28)	44 (1.73)	60 (2.36)	3/8	M16 x 1.5
80	20 (0.79)	11 (0.43)	5 (0.19)	45 (1.77)	32 (1.26)	166 (6.54)	36 (1.42)	252 (9.92)	200 (7.87)	30 (1.18)	113 (4.45)	109 (4.29)	30 (1.18)	50 (1.97)	52 (2.05)	70 (2.76)	3/8	M20 x 1.5
100	20 (0.79)	11 (0.43)	5 (0.20)	55 (2.17)	32 (1.26)	190 (7.48)	45 (1.77)	272 (10.71)	220 (8.66)	30 (1.18)	128 (5.04)	114 (4.49)	30 (1.18)	49 (1.93)	51 (2.01)	70 (2.76)	1/2	M20 x 1.5

800.696.6165 www.comoso.com

Parker Hannifin Corporation
Pneumatic Division
Wadsworth, Ohio
www.parker.com/pneumatics

P1D Removable Gland Version

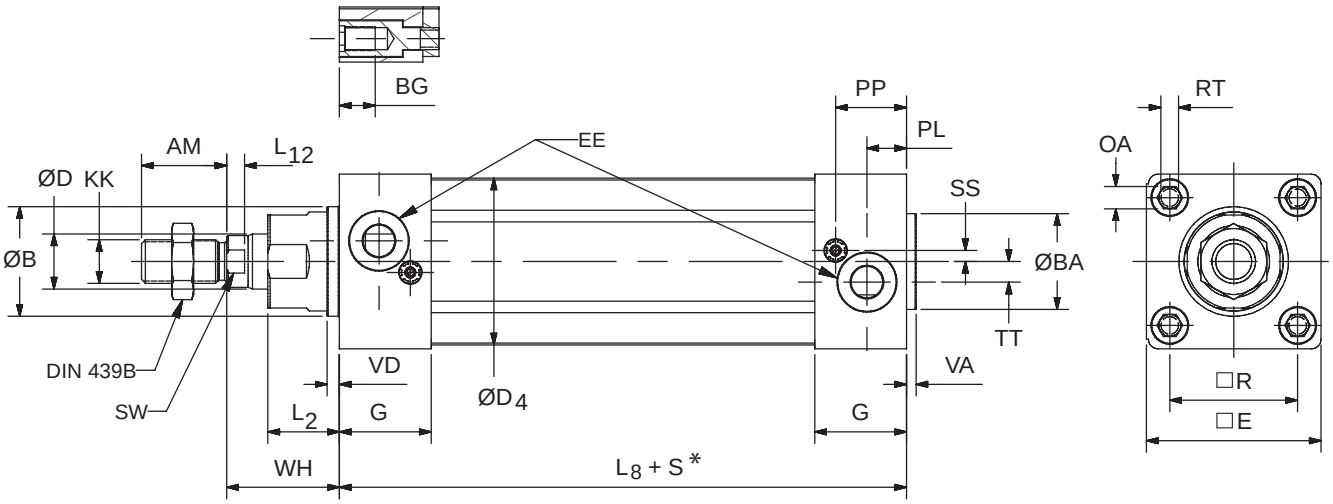

F

Dimensions

								EE						
Cylinder Bore	**AM mm**	**B mm**	**BA mm**	**BG mm**	**D mm**	**D4 mm**	**E mm**	**BSPP**	**NPTF/ BSPT**	**G mm**	**KK**	**L_2 mm**	**L_8 mm**	**L_{12} mm**
32	22	30	30	16	12	45.0	46.5	G1/8	1/8	28.5	M10x1.25	18	94	6.0
40	24	35	35	16	16	52.0	52.0	G1/4	1/4	33.0	M12x1.25	20	105	6.5
50	32	40	40	16	20	60.7	63.5	G1/4	1/4	33.5	M16x1.5	26	106	6.5
63	32	45	45	16	20	71.5	76.0	G3/8	3/8	39.5	M16x1.5	26	121	6.5
80	40	45	45	17	25	86.7	95.5	G3/8	3/8	39.5	M20x1.5	33	128	10.0
100	40	55	55	17	25	106.7	114.5	G1/2	1/2	44.5	M20x1.5	33	138	10.0

Cylinder Bore	**OA mm**	**PL mm**	**PP mm**	**R mm**	**RT**	**SS mm**	**SW mm**	**TT mm**	**VA mm**	**VD mm**	**WH mm**
32	6	13	21.8	32.5	M6	6.5	10	4.5	3.5	4.5	26
40	6	14	21.9	38.0	M6	8.0	13	5.5	3.5	4.5	30
50	8	14	25.9	46.5	M8	4.0	17	7.5	3.5	4.5	37
63	8	16	27.4	56.5	M8	6.5	17	11.0	3.5	4.5	37
80	6	16	30.5	72.0	M10	0	22	15.0	3.5	4.5	46
100	6	18	35.8	89.0	M10	0	22	20.0	3.5	4.5	51

S=Stroke

Tolerances

Cylinder Bore	**B**	**BA mm**	**L_8 mm**	**L_9 mm**	**R mm**	**Stroke Tolerance**
32	d11	d11	±0.4	±2	±0.5	+1/-0
40	d11	d11	±0.7	±2	±0.5	+1/-0
50	d11	d11	±0.7	±2	±0.6	+1/-0
63	d11	d11	±0.8	±2	±0.7	+1/-0
80	d11	d11	±0.8	±3	±0.7	+1/-0
100	d11	d11	±1.0	±3	±0.7	+1/-0

*Stroke Adder for Cylinder Bumper Options

Cylinder Bore	**Option**				
	B	**T**	**R**	**S**	E
32, 40, 50 63, 80	5 (0.20)	25 (0.98)	25 (0.98)	25 (0.98)	25 (0.98)
100	5 (0.20)	5 (0.20)	25 (0.98)	25 (0.98)	0

Adder dimensions in mm (inch)

Note: Adders not used when P1D Rod Lock (K) and P1D Manual Override Rod Lock (S) are specified with bumpers.

800.696.6165 www.comoso.com

Parker Hannifin Corporation
Pneumatic Division
Wadsworth, Ohio
www.parker.com/pneumatics

P1D Rod Lock (K, S)

The P1D Series Rod Lock Cylinder incorporates a powerful piston rod locking device, which clamps the piston rod and locks it in position. The locking device is a spring lock with an air pressure release and is integrated into the front (head) cover of the cylinder. In the absence of air signal pressure, full holding force is applied to the piston rod. When air is present at 4 Bar (58 psi), the locking device is released.

The design provides several valuable characteristics, such as:

- A holding force corresponding to a pressure of 7 Bar (102 psi)
- A clean design, with the front (head) end cover and locking device built into a common block for compact installation.
- Easy to clean, well-sealed construction.
- Exhaust air from the locking device can be piped away when there are high demands for contaminant free environment.

Note: The P1D with rod lock product line is not intended for use in water service applications, or in environments that have high humidity levels and/or splashing fluids present.

Specifications

- Fluid Medium: Dry, filtered, compressed air
- Maximum Cylinder Operating Pressure: 10 Bar (145 PSI)
- Required Pressure to Unlock[1]: 4 Bar (58 PSI)
- Minimum Torque Required for Override:

  32mm Bore = 0.9 N-m / 8 in-lbs
  40mm Bore = 0.9 N-m / 8 in-lbs
  50mm Bore = 2.7 N-m / 24 in-lbs
  63mm Bore = 2.7 N-m / 24 in-lbs
  80mm Bore = 27.1 N-m / 240 in-lbs
  100mm Bore = 36.6 N-m / 324 in-lbs

- Maximum Operating Temperature: -10°C to +75°C, +14°F to +167°F
- Maximum Cylinder Operating Speed: 5 feet per second

[1]Signal pressure to port on locking device. Operation at pressures lower than 4 Bar (58 psi) may lead to inadvertent engagement of the rod lock device.

Connection

The signal air for the locking device can be obtained directly from a main air supply, or from the air supply serving the valve that controls the cylinder itself. For controlled ON/OFF operation of the locking device, a separate quick-venting valve is used.

The piston rod should not be moving when the locking device is activated. The locking device is not intended to brake a movement in repeated sequences.

Holding Forces

Bore Size	Holding Forces	
	(N)	(lbs)
32mm	550	123
40mm	860	193
50mm	1345	303
63mm	2140	481
80mm	3450	755
100mm	5390	1211

Note: All P1D Rod Lock Versions are not intended for use in water service applications, or in environments that have high humidity levels and/or splashing fluids present.

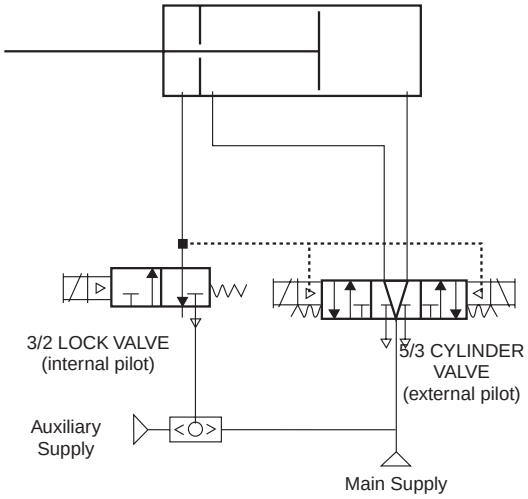

1. Lock valve must be maintained energized during cylinder motion, otherwise rod lock is engaged and cylinder valve shifts to mid position.
2. Cylinder valve must be maintained energized during extend or retract. Also keep energized at end of stroke until change of direction is desired.
3. Mid position of 5/3 Cylinder valve may be pressurized outlets if the combination of pressure load on the cylinder and inertia effects of the attached load do not exceed the holding force rating of the rod lock device, including allowance for wear.
4. Do not use cylinder lines for any logic functions — pressure levels vary too much.

800.696.6165 www.comoso.com
Parker Hannifin Corporation
Pneumatic Division
Wadsworth, Ohio
www.parker.com/pneumatics

P1D Rod Lock Version (K)

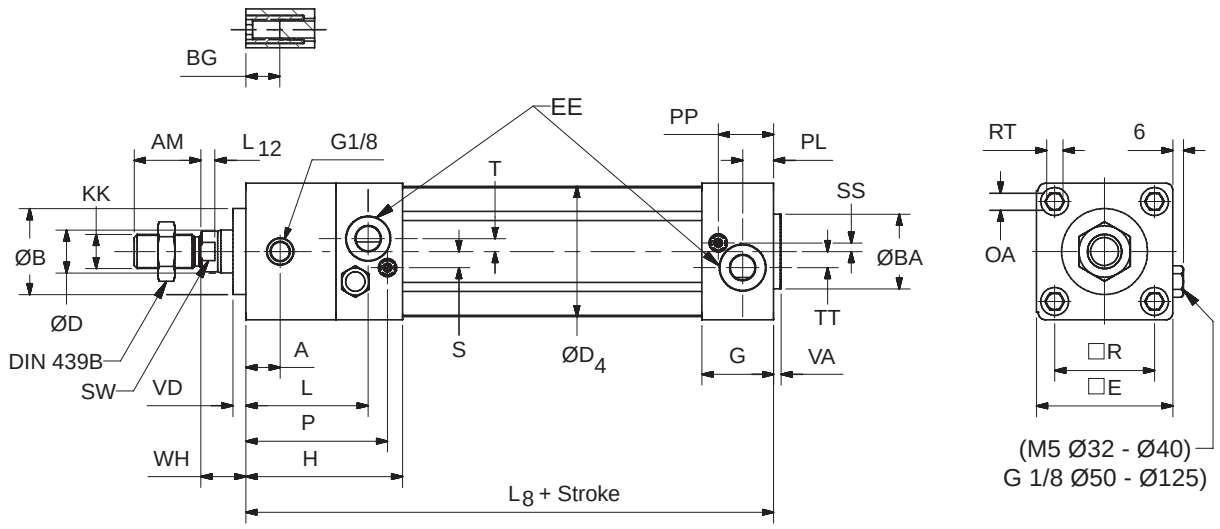

F

Dimensions

Cylinder Bore	A mm	AM mm	B mm	BA mm	BG mm	D mm	D_4 mm	E mm	EE	G mm	H mm	KK	L mm	L_8 mm	L_{12} mm
32	16	22	30	30	16	12	45.0	46.5	G1/8	28.5	71.5	M10x1.25	56.0	137	6.0
40	16	24	35	35	16	16	52.0	52.0	G1/4	33.0	77.0	M12x1.25	56.0	149	6.5
50	18	32	40	40	16	20	60.7	63.5	G1/4	33.5	80.5	M16x1.5	62.5	153	6.5
63	26	32	45	45	16	20	71.5	76.0	G3/8	39.5	96.5	M16x1.5	74.5	178	6.5
80	35	40	45	45	17	25	86.7	95.5	G3/8	39.5	110.5	M20x1.5	87.0	199	10.0
100	50	40	55	55	17	25	106.7	114.5	G1/2	44.5	132.5	M20x1.5	106.0	226	10.0

Cylinder Bore	OA mm	P mm	PL mm	PP mm	R mm	RT mm	S mm	SS mm	SW mm	T mm	TT mm	VA mm	VD mm	WH mm
32	6	64.8	13	21.8	32.5	M6	7	6.5	10	2.5	4.5	3.5	4.5	15
40	6	68.0	14	21.9	38.0	M6	9	8.0	13	2.0	5.5	3.5	4.5	16
50	8	73.5	14	25.9	46.5	M8	8	4.0	17	4.0	7.5	3.5	5.0	17
63	8	89.5	16	27.4	56.5	M8	8	6.5	17	2.0	11.0	3.5	5.0	17
80	6	101.5	16	30.5	72.0	M10	9	0	22	5.0	15.0	3.5	4.0	20
100	6	123.5	18	35.8	89.0	M10	12	0	22	6.0	20.0	3.5	4.0	20

Tolerances

Cylinder Bore	B mm	R mm	L_8 mm	BA mm	Stroke-length Tolerance mm
32	d11	±0.5	±0.4	d11	+1/-0
40	d11	±0.5	±0.7	d11	+1/-0
50	d11	±0.6	±0.7	d11	+1/-0
63	d11	±0.7	±0.8	d11	+1/-0
80	d11	±0.7	±0.8	d11	+1/-0
100	d11	±0.7	±1.0	d11	+1/-0

800.696.6165 www.comoso.com

Parker Hannifin Corporation
Pneumatic Division
Wadsworth, Ohio
www.parker.com/pneumatics

P1D Rod Lock Version with Manual Override (S)

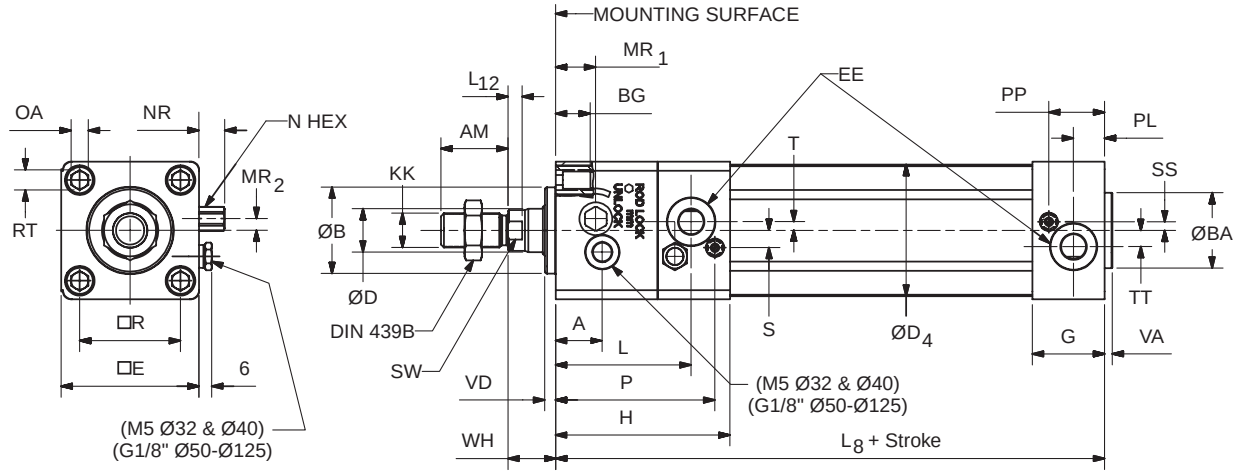

Dimensions

Cylinder Bore	A mm	AM mm	B mm	BA mm	BG mm	D mm	D_4 mm	E mm	EE	G mm	H mm	KK	L mm	L_8 mm	L_{12} mm	MR_1 mm	MR_2 mm
32	27.0	22	30	30	16	12	45.0	46.5	G1/8	28.5	71.5	M10X1.25	56.0	137	6.0	16.0	3.0
40	27.0	24	35	35	16	16	52.0	52.0	G1/4	33.0	77.0	M12X1.25	56.0	149	6.5	16.0	3.0
50	21.5	32	40	40	16	20	60.7	63.5	G1/4	33.5	80.5	M16X1.5	62.5	153	6.5	18.5	5.5
63	39.0	32	45	45	16	20	71.5	76.0	G3/8	39.5	96.5	M16X1.5	74.5	178	6.5	22.0	4.0
80	38.5	40	45	45	17	25	86.7	95.5	G3/8	39.5	110.5	M20X1.5	87.0	199	10.0	15.0	19.8
100	55.0	40	55	55	17	25	106.7	114.5	G1/2	44.5	132.5	M20X1.5	106.0	226	10.0	15.0	20.8

Cylinder Bore	N mm	NR mm	OA mm	P mm	PL mm	PP mm	R mm	RT	S mm	SS mm	SW mm	T mm	TT mm	VA mm	VD mm	WH mm
32	8	10.0	6	64.8	13	21.8	32.5	M6	7	6.5	10	2.5	4.5	3.5	4.5	15
40	8	10.0	6	68.0	14	21.9	38.0	M6	9	8.0	13	2.0	5.5	3.5	4.5	16
50	10	12.0	8	73.5	14	25.9	46.5	M8	8	4.0	17	4.0	7.5	3.5	5.0	17
63	10	12.0	8	89.5	16	27.4	56.5	M8	8	6.5	17	2.0	11.0	3.5	5.0	17
80	11	12.5	6	101.5	16	30.5	72.0	M10	9	0	22	5.0	15.0	3.5	14.0	30
100	11	12.5	6	123.5	18	35.8	89.0	M10	12	0	22	6.0	20.0	3.5	14.0	30

Tolerances

Cylinder Bore	B mm	R mm	L_8 mm	BA mm	Stroke-length Tolerance mm
32	d11	±0.5	±0.4	d11	+1/-0
40	d11	±0.5	±0.7	d11	+1/-0
50	d11	±0.6	±0.7	d11	+1/-0
63	d11	±0.7	±0.8	d11	+1/-0
80	d11	±0.7	±0.8	d11	+1/-0
100	d11	±0.7	±1.0	d11	+1/-0

Parker Hannifin Corporation
Pneumatic Division
Wadsworth, Ohio
www.parker.com/pneumatics

800.696.6165 www.comoso.com

Bumpers / Adjustable Stop Collars

Bumpers absorb shock, reduce noise and permit faster cycle times, thereby increasing production rates. They can be placed on the extend, retract or both positions.

When bumpers are specified on the extend stroke, an adjustable stop collar is required and provides travel adjustment. An optional stop collar can also be specified for the retract stroke.

OPTIONS:

B – Bumpers (retract only)
E – Bumpers, adjustable stop collars (extend only)
R – Bumpers, adjustable stop collars (retract only)
S – Bumpers, adjustable stop collars (both ends)
T – Bumpers both ends, adjustable stop collars on extend

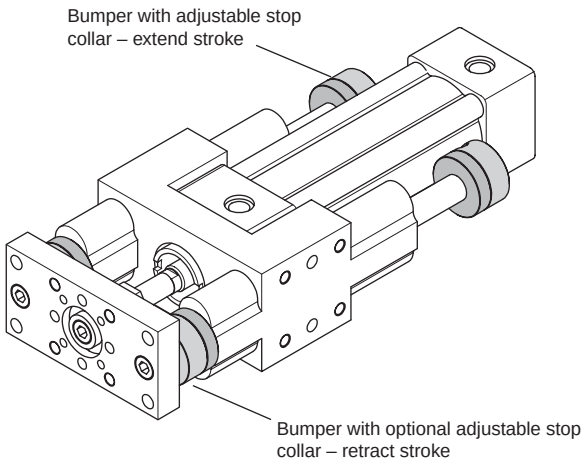

Bumpers and adjustable stop collars, both ends (S)

NOTES:

1. Bumpers and adjustable stop collars are not available with oversize shaft options.
2. To achieve the desired useable stroke length with options B, E, T, R or S, the cylinder length will increase. See Stroke Adder table for cylinder dimensions adders.
3. Bumpers and adjustable stop collars on the extend stroke require additional cylinder stroke lengths on some bore sizes in order for the collars to clear the cylinder end cap. *Therefore, cushions on extend stroke are not available with this option.* See Stroke Adder table for cylinder dimension adders with options E, T or S.

F

Stroke Adder for Cylinder Bumper Options

Cylinder Bore	Option				
	B	T	R	S	E
32, 40, 50 63, 80	5 (0.20)	25 (0.98)	25 (0.98)	25 (0.98)	25 (0.98)
100	5 (0.20)	5 (0.20)	25 (0.98)	25 (0.98)	0

Adder dimensions in mm (inch)

Note: Adders not used when P1D Rod Lock (K) and P1D Manual Override Rod Lock (S) are specified with bumpers.

Sensors

Optional solid state and reed sensors sense the position of the magnetic ring on the cylinder piston. Drop-in Global Sensors are installed into the integral sensor grooves on the cylinder body and are easily positioned. Magnetic piston is standard.

Order sensors separately. See Electronic Sensors section for part numbers and specifications.

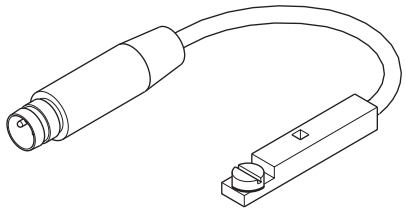

Parker Hannifin Corporation
Pneumatic Division
Wadsworth, Ohio
www.parker.com/pneumatics

800.696.6165 www.comoso.com

Mounting Kits

Mounting kits conform to ISO 6431, ISO/DIS 15552, VDMA 24 562 and AFNOR standards.

Kits include 4 mounting screws.

Raw Material: Galvanized steel

Horizontal Mounting Kit (1)

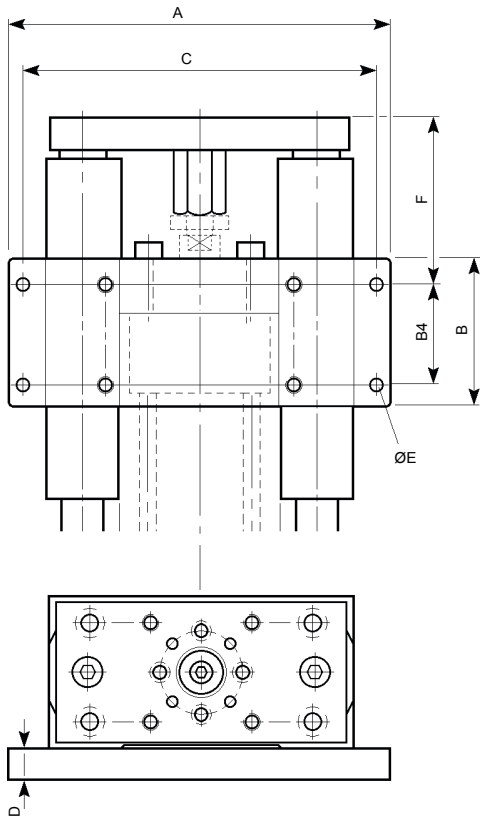

Vertical Mounting Kit (2)

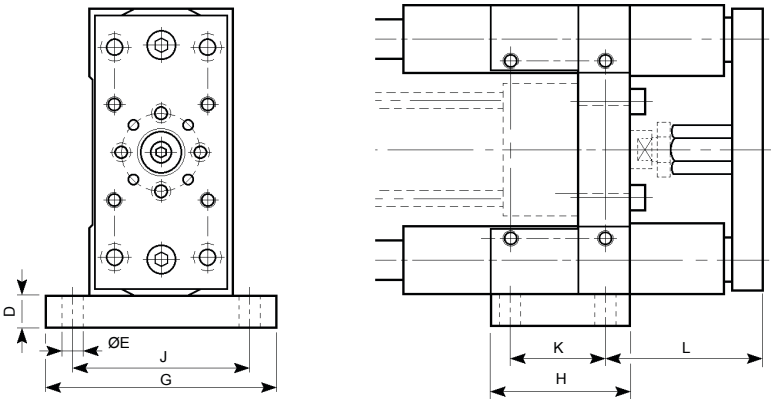

Dimensions & Weights

Bore Size	Mounting (1) Horizontal	Mounting (2) Vertical	A	B	B4	C	D	E	F	G	H	J	K	L	Weight, g (lb) (1)	Weight, g (lb) (2)
32	**32-2801R**	**PIC-4KMB**	128 (5.04)	50 (1.97)	32.5 (1.28)	116 (4.57)	10 (0.39)	6.6 (0.26)	60 (2.37)	80 (3.15)	47 (1.85)	64 (2.52)	32 (1.26)	60 (2.37)	500 (1.10)	230 (0.51)
40	**40-2801R**	**PIC-4LMB**	155 (6.10)	55 (2.16)	38 (1.50)	140 (5.51)	10 (0.39)	9 (0.35)	63 (2.48)	92 (3.62)	53 (2.09)	72 (2.83)	36 (1.42)	64 (2.52)	700 (1.54)	280 (0.62)
50	**50-2801R**	**PIC-4MMB**	175 (6.89)	70 (2.76)	46.5 (1.83)	160 (6.30)	12 (0.47)	9 (0.35)	70 (2.76)	113 (4.45)	65 (2.56)	90 (3.54)	45 (1.77)	71 (2.79)	1180 (2.60)	530 (1.17)
63	**63-2801R**	**PIC-4NMB**	190 (7.48)	80 (3.15)	56.5 (2.22)	175 (6.89)	12 (0.47)	9 (0.35)	74 (2.91)	129 (5.08)	74 (2.91)	100 (3.94)	50 (1.97)	77 (3.03)	1450 (3.20)	710 (1.57)
80	**80-2801R**	**PIC-4PMB**	240 (9.45)	100 (3.94)	72 (2.83)	218 (8.58)	16 (0.63)	11 (0.43)	89 (3.50)	153 (6.02)	97 (3.82)	126 (4.96)	63 (2.48)	93.5 (3.68)	3000 (6.61)	1590 (3.51)
100	**100-2801R**	**PIC-4QMB**	270 (10.63)	120 (4.72)	89 (3.50)	245 (9.65)	16 (0.63)	13 (0.51)	90.5 (3.56)	186 (6.93)	111 (4.37)	150 (5.91)	75 (2.95)	97.5 (3.84)	4100 (9.04)	2190 (4.83)

Note: All dimensions in mm or (inch) unless otherwise noted.

Parker Hannifin Corporation
Pneumatic Division
Wadsworth, Ohio
www.parker.com/pneumatics

800.696.6165 www.comoso.com

Seal Kits for Cylinder Only

Please see P1D Series Section Page C33.

F

800.696.6165 www.comoso.com

Parker Hannifin Corporation
Pneumatic Division
Wadsworth, Ohio
www.parker.com/pneumatics