"DX" ISOMAX Series

Directional Control Valves

15407-1 & 5599-1

DX02 – 0.55 Cv ***DX01 – 0.75 Cv***
DX1 – 1.15 Cv ***DX2 – 2.50 Cv***
DX3 – 4.15 Cv

Section E

www.parker.com/pneu/isomax

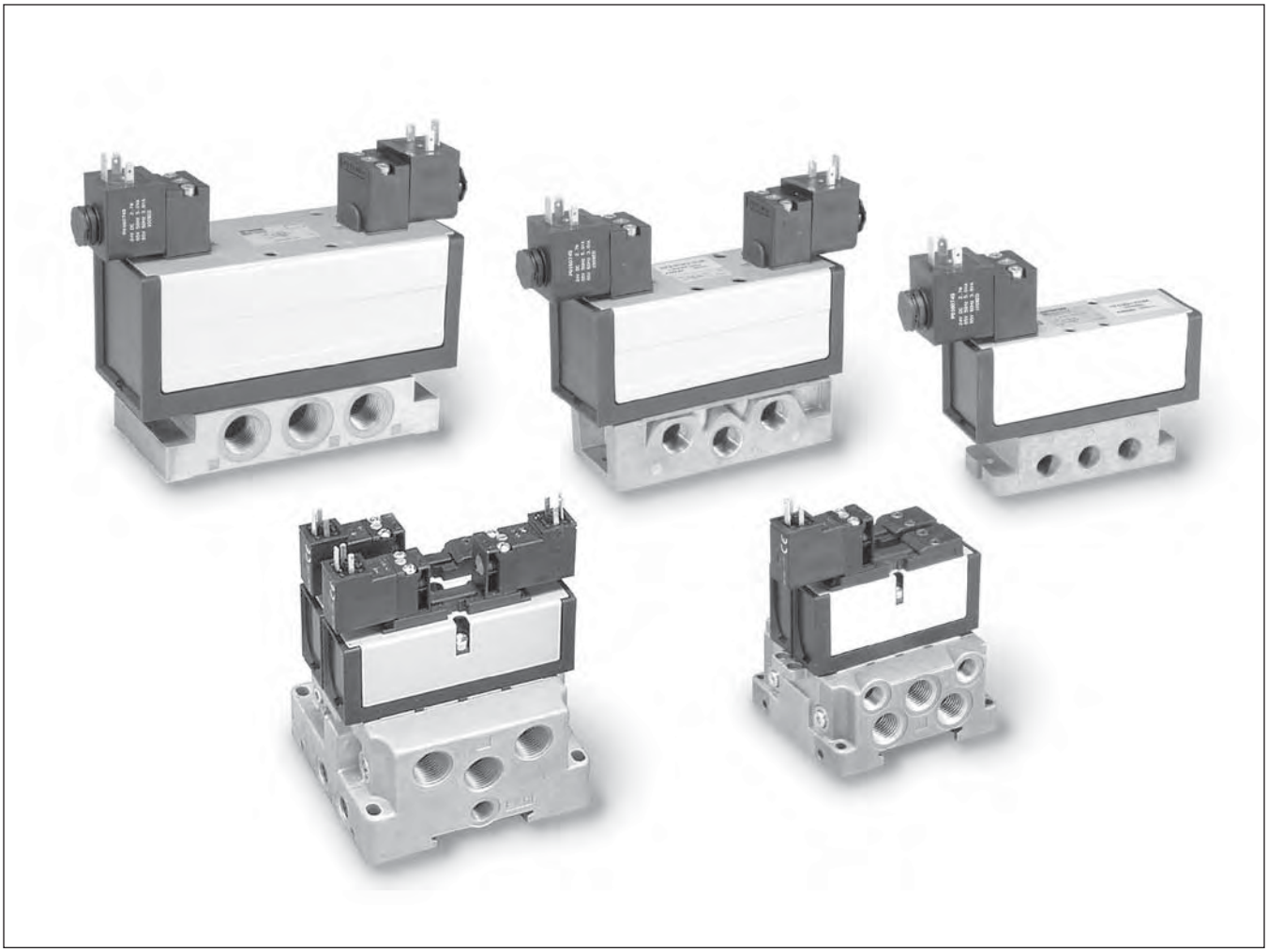

ISOMAX 15407-1 Ceramic, DX02 & DX01
- Valve Range & Features E186
- Features E187
- Specifications E188
- Common Part Numbers E189
- Model Number Index E190
- Add-A-Fold Ordering Information E191
- Subbases & Manifolds E192-E195
- Accessories E196-E198
- Selector Gasket Conversion Instructions E199-E200
- DX01 Manifold Assembly & Conversion Instructions E201-E204
- DX02 Manifold Assembly E205-E207
- Subbase Assembly E208
- Dimensions E209-E210

ISOMAX 5599-1 Ceramic, DX1 1/4", DX2 3/8", DX3 1/2"
- Specifications E211
- Common Part Numbers E212
- Model Number Index E213
- Add-A-Fold Assemblies E214
- Accessories E215-E219
- Electrical Connectors E220
- Internal / External Pilot Conversion Instructions E221
- Dimensions E222-E226

BOLD ITEMS ARE MOST POPULAR.

Parker Hannifin Corporation
Pneumatic Division
Richland, Michigan
www.parker.com/pneumatics

www.comoso.com

Valve Range

DX02 1/8", ISO 15407-1, Size 02
DX01 1/4", ISO 15407-1, Size 01

DX1 1/4", ISO 5599-1, Size 1
DX2 3/8", ISO 5599-1, Size 2
DX3 1/2", ISO 5599-1, Size 3

ISO 15407-1

ISO 5599-1

The ISOMAX range of directional control valves complies with ISO 15407-1 and VDMA 24563 for sizes 02 and 01 and ISO 5599-1 for sizes 1, 2 and 3. ISOMAX provides flows from 0.55 Cv to 4.15 Cv.

The ISOMAX range includes valves for pneumatic and electrical actuation with a wide choice of subbases and manifolds to suit different application needs.

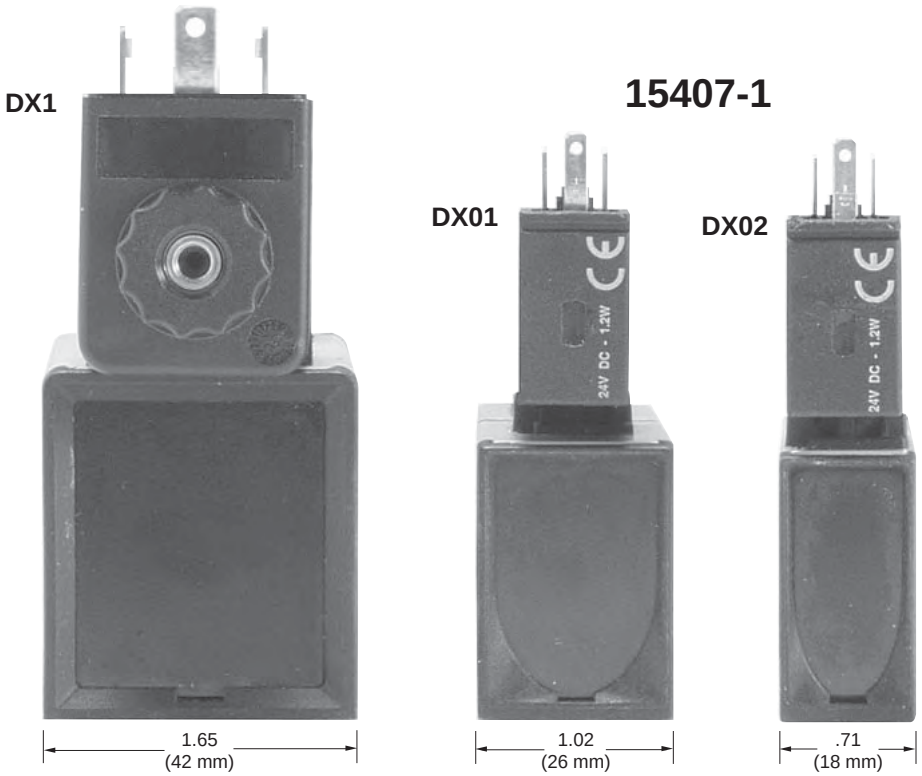

Corrosion Free and Modern Design

With the valve body in Polyamide reinforced fiberglass and the casing in anodized aluminium, the complete ISOMAX range presents a coherent modern design to suit most industrial environments.

Vacuum Operation

All ISOMAX valves may be used for either vacuum or pressure applications.

Dual Pressure

In order to supply 2 different pressures to the same actuator, it is possible to connect 2 main pressure supplies to the exhaust ports and use the pressure port 1 as exhaust port.

Parker Hannifin Corporation
Pneumatic Division
Richland, Michigan
www.parker.com/pneumatics

www.comoso.com

Features

Ceramic Technology

All ISOMAX products use high-tech ceramic switching technology providing:

- **Excellent Reliability**
  Long life in excess of 100 million operations*.
  Operates with lubricated or non-lubricated air.
  Low sensitivity to air quality changes.
- **High Performance**
  Slide valve concept allows high flow / size ratio and short response time due to short slide stroke and low friction.
- **Stable Long Lasting Performances**
  Low friction switching: minimum wear of the valve member / seal assembly.
- **Valves Fitted with Switchable Selector to Give Internal or External Pilot Supply**

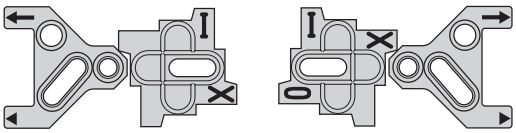

DX02 & DX01 Selector Gaskets

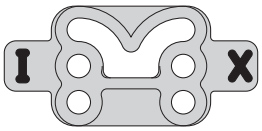

DX1, DX2 & DX3 Selector Gasket

Applicable Markets

Industries where ISO standardization is accepted.

- Automotive
- Food Processing
- Medical
- Chemical
- Tire Manufacturing
- Steel Processing
- Glass Processing
- Where OEM'S Export Globally

* Refer to our warranty conditions.

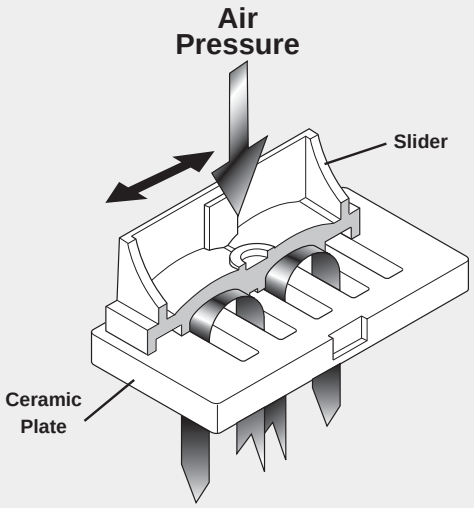

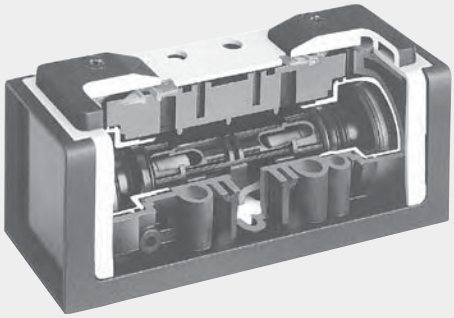

Remote Pilot

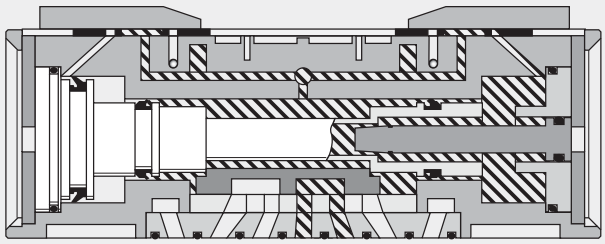

Pressure **Exhaust**

Parker Hannifin Corporation
Pneumatic Division
Richland, Michigan
www.parker.com/pneumatics

ISOMAX 15407-1

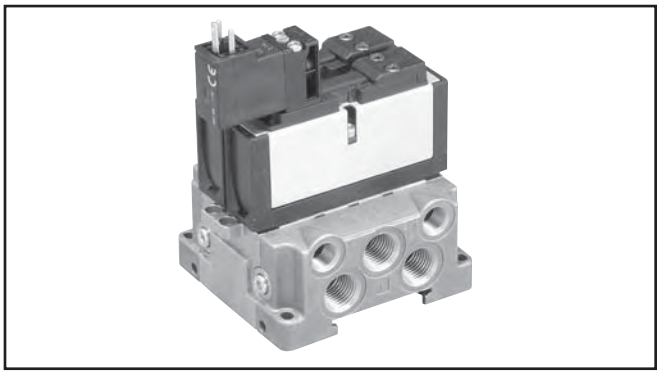

Specifications

Standard Subbase:
ISO 15407-1 and VDMA 24563

Permissible Fluid
Air or Inert Gas, filtered 40µ (Class 5 per ISO 8573-1), Lubricated or Non-lubricated

Pressure Supply:
Possible to supply Exhaust Ports 3 or 5 or Cylinder Ports 2 or 4, with Internal Pilot Supply. (Not possible with APB).

Flow:
DX01 = .75Cv, DX02 = .55Cv

Working Temperatures:
-10°C to 60°C (14°F to 140°F)

Storage Temperatures:
-20°C to 70°C (-4°F to 158°F)

Mechanical Life:
> 100 million operations (Dry air filtered 40µ, 2Hz, 6 bar, 20°C)

Actuation Type:
Electric / Pneumatic with 15mm Solenoid Valve Interface CNOMO E06.36120N

Flow Rating (Cv)

Size	Port Size	Mounting Style	2-Position	3-Position
DX02	1/8"	Manifold	0.45	0.35
		Subbase	0.55	0.40
DX01	1/4"	Manifold	0.70	0.45
		Subbase	0.75	0.50

Cv tested per ANSI / (NFPA) T3.21.3

Solenoid Information

Code	Voltage			Power (W / VA)
	AC		DC	
	60Hz	50Hz		
M	—	—	24	1.2W
J	120	110	—	1.6VA

Data tested with LED and Surge Suppression.

Response Time**
Single Solenoid 2-Position - Air Return / Spring Assist

Valve Size	Port Size	0 Cu. In. Chamber		## Cu. In. Chamber	
		Fill	Exhaust	Fill	Exhaust
DX02	1/8"	0.025	0.030	0.125	0.220
DX01	1/4"	0.015	0.020	0.122	0.200

DX01 (25), DX02 (12.5)

** With 100 PSIG supply, time required to fill from 0 to 90 PSIG and Exhaust from 100 PSIG to 10 PSIG measured from the instant of energizing or de-energizing 24VDC solenoid.

Tested per ANSI / (NFPA) T3.21.8

Operating Pressure

Vacuum to 145 PSIG (10 bar)

Function		M.O.P (PSIG)
20, 21, 22, 23	2-Position, Spring Return	36
50, 51, 53, 54	2-Position, Air Return	30
04, 05, 06, 08	2-Position	15
09, 11, 12, 27	3-Position, CE	45
16, 18, 19, 25	3-Position, APB	45

Material Specifications

Valve Member ..... Self Lubricating Acetal
Seat ..... Ceramic
Body ..... Polyamide Reinforced Fiberglass
Casing ..... Anodized Aluminum
End Plates ..... Painted Zinc Plated Steel
Valve Plate ..... Zinc
Seals ..... Nitrile
Springs ..... Stainless Steel
Screws ..... Zinc Plated Steel
Function Selector ..... Polyamide Reinforced Fiberglass
Top Cover Seal ..... Polyester

Parker Hannifin Corporation
Pneumatic Division
Richland, Michigan
www.parker.com/pneumatics

www.comoso.com

Single Solenoid

2-Position

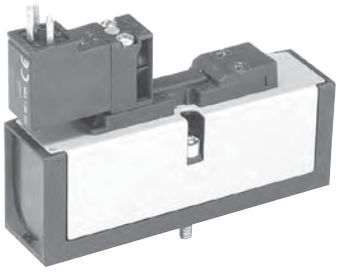

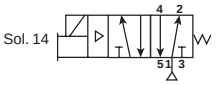

DX02	**DX02-621-951J**	120VAC	0.55 Cv C = 1.5 Nl/s x bar, b = 0.25 Qn = 378 l/min, Qmax = 636 l/min
	DX02-621-951M	24VDC	
DX01	**DX01-621-951J**	120VAC	.75 Cv C = 2.5 Nl/s x bar, b = 0.25 Qn = 588 l/min, Qmax = 1026 l/min
	DX01-621-951M	24VDC	

Double Solenoid

2-Position

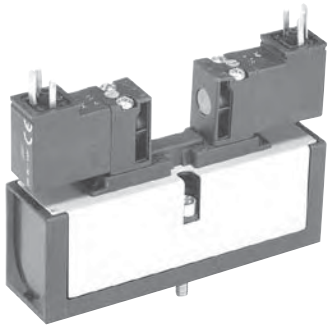

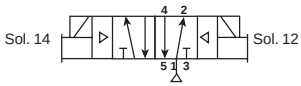

DX02	**DX02-606-951J**	120VAC	0.55 Cv C = 1.5 Nl/s x bar, b = 0.25 Qn = 378 l/min, Qmax = 636 l/min
	DX02-606-951M	24VDC	
DX01	**DX01-606-951J**	120VAC	.75 Cv C = 2.5 Nl/s x bar, b = 0.25 Qn = 588 l/min, Qmax = 1026 l/min
	DX01-606-951M	24VDC	

Double Solenoid

3-Position APB
3-Position CE

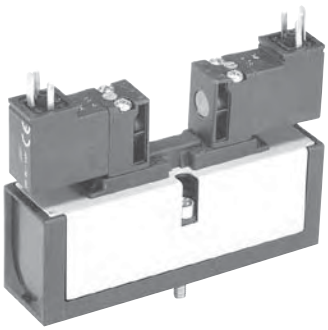

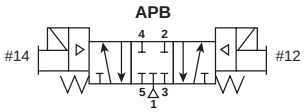

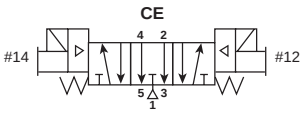

	APB			CE		
DX02	**DX02-616-951J**	120VAC	0.40 Cv C = 1.1 Nl/s x bar, b = 0.25 Qn = 275 l/min, Qmax = 464 l/min	**DX02-611-951J**	120VAC	0.40 Cv C = 1.1 Nl/s x bar, b = 0.25 Qn = 275 l/min, Qmax = 464 l/min
	DX02-616-951M	24VDC		**DX02-611-951M**	24VDC	
DX01	**DX01-616-951J**	120VAC	.50 Cv C = 1.7 Nl/s x bar, b = 0.25 Qn = 392 l/min, Qmax = 684 l/min	**DX01-611-951J**	120VAC	.50 Cv C = 1.7 Nl/s x bar, b = 0.25 Qn = 392 l/min, Qmax = 684 l/min
	DX01-616-951M	24VDC		**DX01-611-951M**	24VDC	

Torque Specifications
DX02: 15 to 25 in-lbs (1.69 to 2.82 Nm)
DX01: 20 to 30 in-lbs (2.26 to 3.39 Nm)

For Subbases and Manifolds, see page E178 thru E179.

Parker Hannifin Corporation
Pneumatic Division
Richland, Michigan
www.parker.com/pneumatics

BOLD OPTIONS ARE MOST POPULAR

DX02 – 6 06 – 95 1 M

Basic Series	
ISO 15407-1 (18mm)	DX02
ISO 15407-1 (26mm)	DX01

Pilot	
Air Operated Remote Pilot	4
Solenoid Operated	6

Function	
Internal Pilot Supply / Captured Exhaust 12	
2-Position, Spring Return	**21**
2-Position, Air Return	**51**
2-Position	**06**
3-Position, CE	**11**
3-Position, APB	**16**
External Pilot 14 Supply / Captured Exhaust 12*	
2-Position, Spring Return	23
2-Position, Air Return	54
2-Position	05
3-Position, CE	09
3-Position, APB	19
Internal Pilot Supply / Vented Exhaust	
2-Position, Spring Return	20
2-Position, Air Return	50
2-Position	04
3-Position, CE	27
3-Position, APB	25
External Pilot Supply / Vented Exhaust*	
2-Position, Spring Return	22
2-Position, Air Return	53
2-Position	08
3-Position, CE	12
3-Position, APB	18

* Must be specified when using Sandwich Regulators.

Voltage & Frequency			
	AC		DC
	60Hz	50Hz	
J	120	110	
M			24
Blank	Remote Pilot		

Override	
Blank	**Remote Pilot**
1	**Non-Locking, Flush**
3	Locking, Flush

Operator	
60	**None, Remote Pilot Valve**
95	**15mm, 3-Pin, DIN 43650C**

Note: DX02 18mm Valve Remote Pilot Option only available with PL02 Individual Subbase Kits

Parker Hannifin Corporation
Pneumatic Division
Richland, Michigan
www.parker.com/pneumatics

www.comoso.com

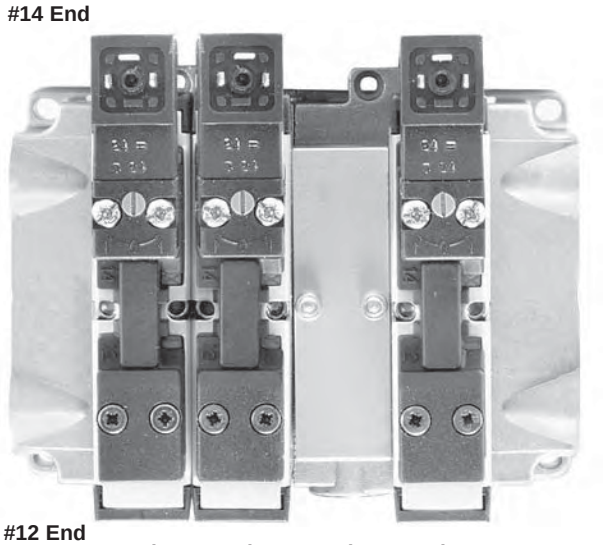

* Each Manifold has two (2) Stations
(Even number of Stations Required)

How To Order Add-A-Fold Assemblies

1. List Add-A-Fold Assembly call out. This automatically includes the end plate kit assembly.
2. List complete valve/base model number. List left to right, looking at the cylinder ports on the #12 end of the manifold. The left most station is station 1.

   (If a blank station is needed, list the blanking plate part number and the individual manifold number in the station specified.)

Model Number

AA 02U 0 04

Valve Series	
Right & Left End Plate 15407-1, DX01	01U†
Right & Left End Plate 15407-1, DX02	02U**
Right & Left End Plate 15407, DX01 & DX02	HBS*

* Common End Plates for DX01 & DX02. For use with PS5 Manifolds.
**For use with PJLP02 Manifolds.
† For use with PJLP01 or PJL01 Manifolds.

	Number of Stations*
02	2 Stations
04	4 Stations
•	
24	24 Stations
•	
32†	32 Stations

* Must be ordered in multiples of 2.
† Maximum Number.

	Port Type
0	NPT
1	BSPP "G"

Example: Application requires a 3-Valve manifold.

Qty.	Part No.	
1	AA02U004	
1	DX02-651-951M	Valve Station 1
1	DX02-651-951M	Valve Station 2
1	PJLP02-201-80	Base Station 1 & 2
1	DX02BLK	Valve Station 3
1	DX02-651-951M	Valve Station 4
1	PJLP02-201-80	Base Station 3 & 4

Note: DX02 Manifolds cannot be used for remote pilot.

Parker Hannifin Corporation
Pneumatic Division
Richland, Michigan
www.parker.com/pneumatics

www.comoso.com

Individual Subbase Kit

with Side Ports

Size	Port Size	Kit Number	
		NPT	BSPP "G"
18mm DX02	1/8"	**PL02-01-80**	PL02-01-70

Note: Can be used for external, single, or double remote pilot.

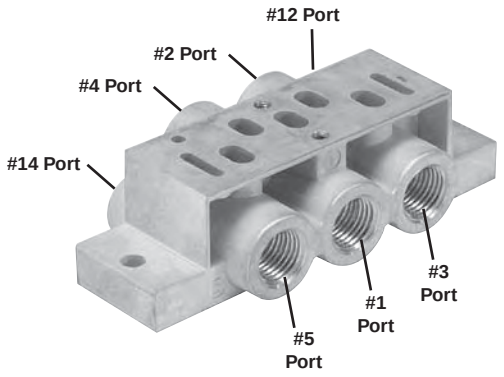

Two Station Manifold Base

with Side Ports

Size	Port Size	Kit Number	
		NPT	BSPP "G"
18mm DX02	1/8"	**PJLP02-201-80**	PJLP02-201-70

Note: Can be used for external pilot, not remote pilot.
Gaskets and assembly hardware included.

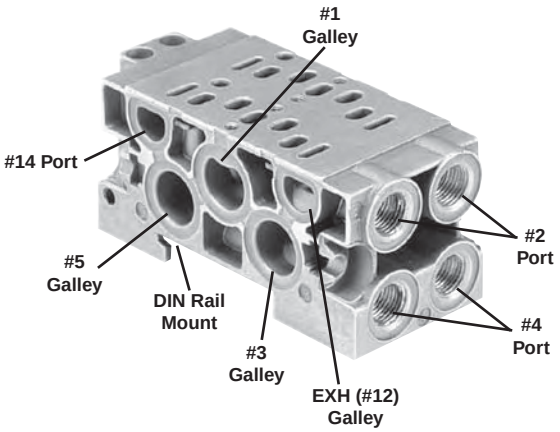

PJLP02

End Plate Kit

for Side Ported Two Station Manifold Base

Size	Port Size	Kit Number	
		NPT	BSPP "G"
18mm DX02	1/8"	**PEJ02-02-80***	PEJ02-02-70

Notes: Put a vent or muffler in "EXH" port when capturing pilot exhaust pressure with a solenoid valve. (See page E182 for gasket selector details.
Gaskets and assembly hardware included.
Torque Specifications: 25 to 35 in-lbs (2.82 to 3.95 Nm)

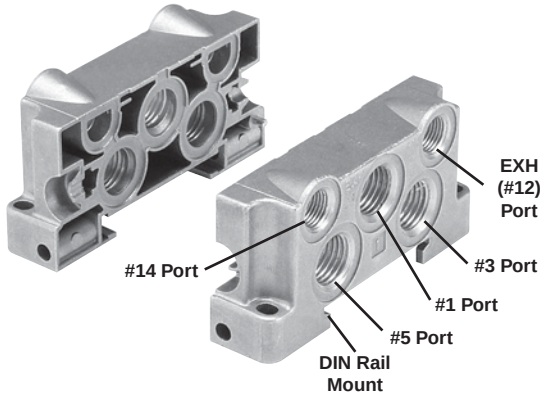

PEJ02
(Type "P")

Parker Hannifin Corporation
Pneumatic Division
Richland, Michigan
www.parker.com/pneumatics

www.comoso.com

Individual Subbase Kit
with Side Ports

Size	Port Size	Kit Number	
		NPT	BSPP "G"
26mm DX01	1/4"	**PL01-02-80**	PL01-02-70

Note: Can be used for external, single, or double remote pilot.

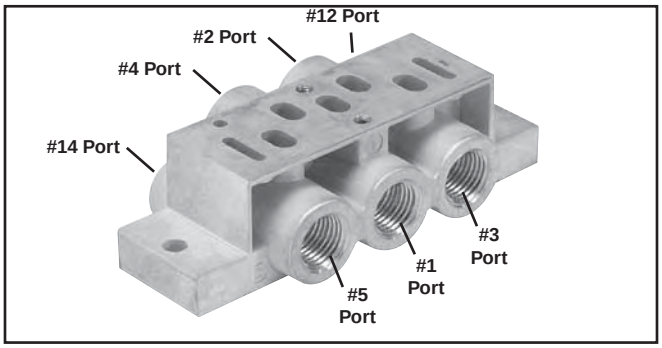

Two Station Manifold Base
with Side Ports

Size	Port Size	Kit Number	
		NPT	BSPP "G"
26mm DX01	1/4"	**PJLP01-202-80**	PJLP01-202-70

Notes: Can be used for single remote pilot using the #14 Port and external pilot.

Gaskets and assembly hardware included.

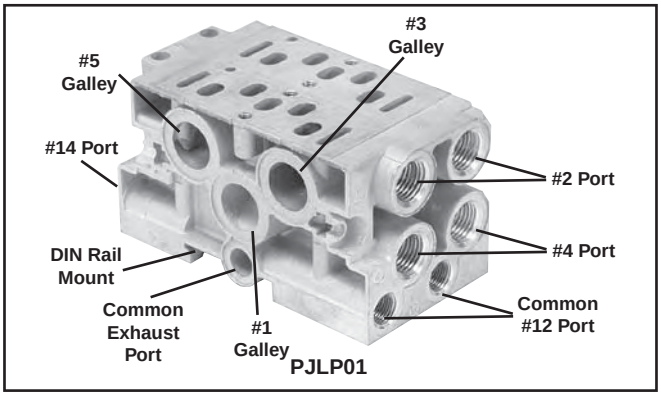

PJLP01

Size	Port Size	Kit Number	
		NPT	BSPP "G"
26mm DX01	1/4"	**PJL01-202-80**	PJL01-202-70

Notes: #12 ports work independently when plunger is not depressed by a plug. When a plug is inserted in #12 Port along with the captured pilot exhaust gasket selector option, pilot exhaust is sent to ther Common Exhaust Port. Do Not plug exhaust, insert a vent of muffler.

Gaskets and assembly hardware included.

Can be used for external, single or double remote pilot.

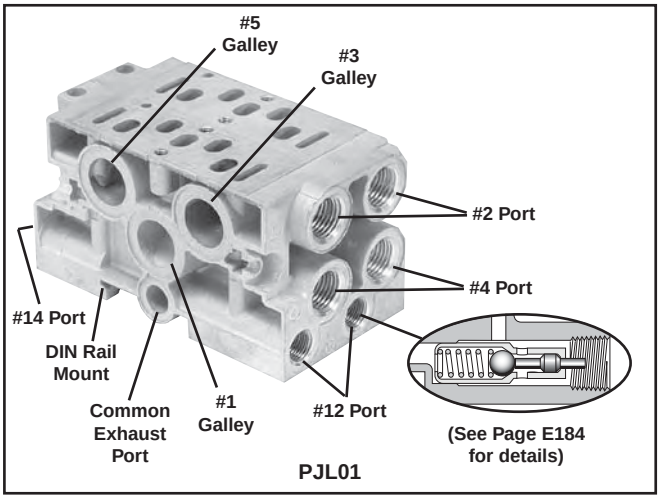

PJL01

End Plate Kit
for Side Ported Two Station Manifold Base

Size	Port Size	Kit Number	
		NPT	BSPP "G"
26mm DX01	1/4"	**PEJ01-03-80***	PEJ01-03-70

* Use with PJLP01 or PJL01

Notes: Put a vent or muffler in "EXH" port when capturing pilot exhaust pressure with a solenoid valve. See page J18 for gasket selector details.

Gaskets and assembly hardware included.

Torque Specifications: 25 to 35 in-lbs (2.82 to 3.95 Nm)

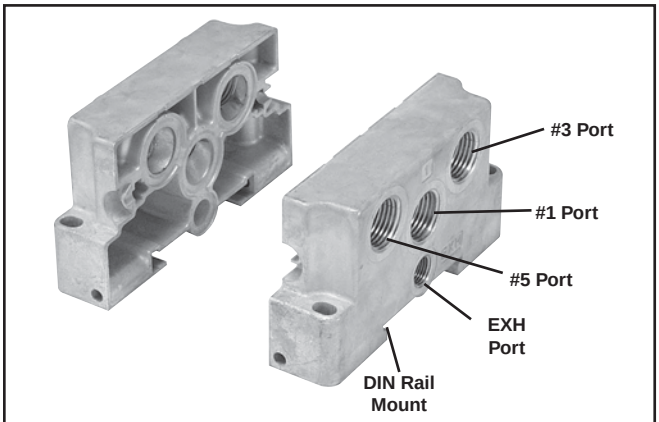

PEJ01

Parker Hannifin Corporation
Pneumatic Division
Richland, Michigan
www.parker.com/pneumatics

www.comoso.com

15407-1, DX02 & DX01 Manifold / Subbase Kits

PS5511 13 0 P

Basic Series	
ISO 15407-1 DX02	PS5611
ISO 15407-1 DX01	PS5511

Enclosures / Lead Length	
0	None, No Electrical Plug - 15407-1

Mounting Style / Port Size	
DX02	
Manifold with 1/8 NPT End Ports	**51**
Manifold with 1/8 BSPP End Port	52
Manifold with 1/8 NPT Bottom / End Port	61
Manifold with 1/8 BSPP Bottom / End Port	62
DX01	
Subbase with 1/4 NPT Side Ports	**13**
Subbase with 1/4 BSPP Side Ports	14
Subbase with 1/4 NPT Bottom / Side Port	23
Subbase with 1/4 BSPP Bottom / Side Port	24
Manifold with 1/4 NPT End Port	**53**
Manifold with 1/4 BSPP End Port	54
Manifold with 1/4 NPT Bottom / End Port	63
Manifold with 1/4 BSPP Bottom / End Port	64

Subbase Kits

DX01 Series Subbase

Manifold Kits

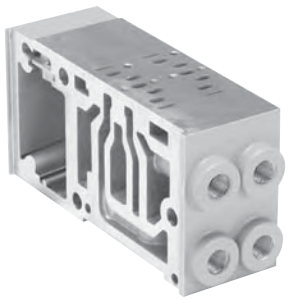

DX02 Series 2-Station Manifold

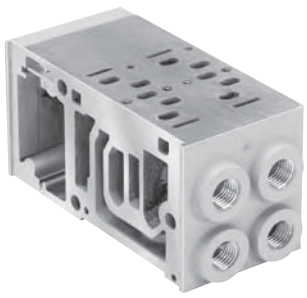

DX01 Series 2-Station Manifold

Parker Hannifin Corporation
Pneumatic Division
Richland, Michigan
www.parker.com/pneumatics

www.comoso.com

15407-1, DX02 & DX01 End Plate Kits

PS56 31 01 0 P

Basic Series	
ISO 15407, Size DX02, DX01	PS56

End Plate Kit Type	
End Plate, Non-Collective Wiring	31

Thread Type	
0	NPT
1	BSPP "G"

Options	
01	Non-Collective Wiring

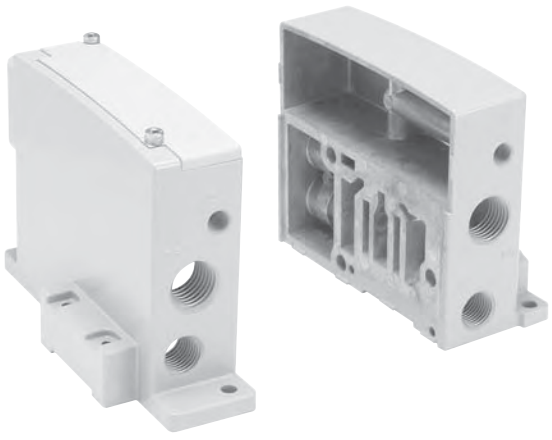

DX02 - DX01 Non-Collective Wiring End Plates

Parker Hannifin Corporation
Pneumatic Division
Richland, Michigan
www.parker.com/pneumatics

www.comoso.com

Sandwich Regulators Features

- Remote Air Pilot Operated for hard-to-reach pressure control.
- Unregulated Pilot Pressure to valve for consistent valve shifting regardless of pressure adjustment.

Remote Pilot Access Plate Kit

Size	Port Size	Kit Number	
		NPT	BSPP
26mm DX01	1/8"	**PS551500P**	**PS551501P**

DX02
(Independent Dual Port Regulator Shown)

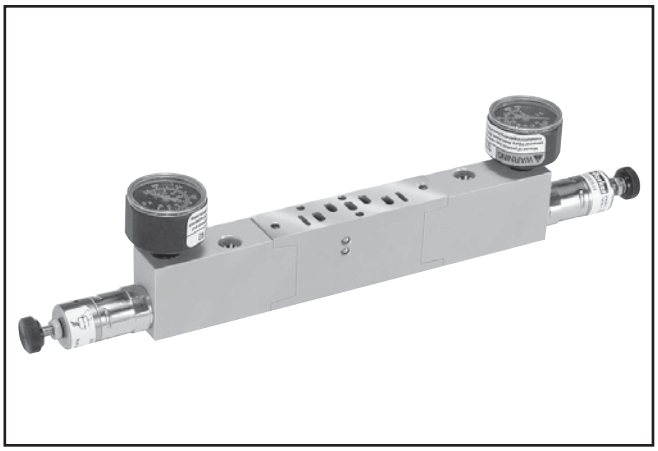

DX01
(Common Port Regulator Shown)

BOLD OPTIONS ARE MOST POPULAR

PS5637 1 6 6 P

Basic Series	
DX02	
15407-1, 18mm	PS5637
DX01	
15407-1, 26mm	PS5537

Regulator Function	
Common Pressure Regulator	1
Independent Pressure Regulator	2

#2 Port Regulator / Gauge*	
5	2-60 PSIG w/Gauge
6	**5-125 PSIG w/Gauge**

* For Common Pressure Regulator Option, Regulator Gauge callout must be the same number for both Port #4 and Port #2. (Example: 166)

#4 Port Regulator / Gauge*	
5	2-60 PSIG w/Gauge
6	**5-125 PSIG w/Gauge**

* For Common Pressure Regulator Option, Regulator Gauge callout must be the same number for both Port #4 and Port #2. (Example: 166)

Parker Hannifin Corporation
Pneumatic Division
Richland, Michigan
www.parker.com/pneumatics

www.comoso.com

Intermediate Air Supply Base

Size	Port Size	Kit Number
		NPT
18mm DX02	1/8" NPT	**D02P-01-80**
26mm DX01	1/4" NPT	**D01P-02-80**

Notes: Gasket & Mounting Bolts included.
Torque Specifications
Size 02: 15 to 25 in-lbs (1.69 to 2.82 Nm)
Size 01: 20 to 30 in-lbs (2.26 to 3.39 Nm)

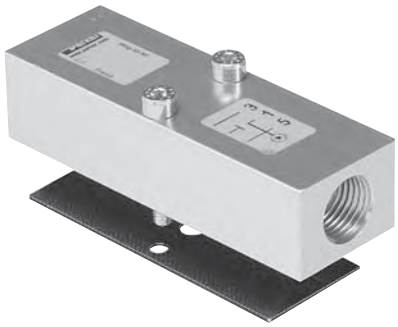

Manifold Port Isolation Disc

Size	Common Pressure
18mm DX02	**D02BD0**
26mm DX01	**D01BD0**

Notes: 3 Discs per Kit.
Used on PJL Manifolds.

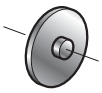

Blanking Plate

Size	Common Pressure
18mm DX02	**PS5634P**
26mm DX01	**PS5534P**

Notes: Gasket & Mounting Bolts included.
Torque Specifications
Size 02: 15 to 25 in-lbs (1.69 to 2.82 Nm)
Size 01: 20 to 30 in-lbs (2.26 to 3.39 Nm)

Sandwich Flow Control Features

- Both adjustment screws are located on the 12 end of the unit.
- Sandwich Flow Control mounts with its own studs, which means the valve uses standard bolts for mounting.
- Sandwich Flow Control is not to be used as a shut off device and is not bubble tight when needles are fully turned down.

Size	Kit Number
18mm DX02	**PS5642P**
26mm DX01	**PS5542P**

DX02
18mm Shown

Parker Hannifin Corporation
Pneumatic Division
Richland, Michigan
www.parker.com/pneumatics

www.comoso.com

Manifold to Manifold Gasket Kits

Size	Standard	Blocked #1 Port	Blocked #1, 3, 5 Ports	Blocked #3, 5 Ports
DX02 * / DX01 *	PS561AP	PS561BP	PS561CP	PS561DP
DX02	DX02M2MGSKT (PJLP02)			
DX01	DX01M2MGSKT (PJLP01)			

* Gaskets used with PS5611 & PS5511 Manifolds.

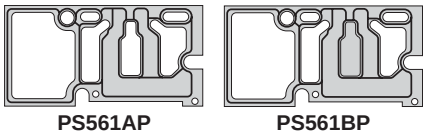
PS561AP

PS561BP

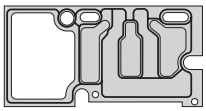
PS561CP

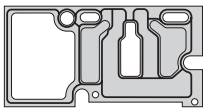
PS561DP

DX02M2MGSKT (PJLP02)

DX01M2MGSKT (PJLP01)

15mm 3-Pin DIN 43650C Connectors

Connector	Connector with 6' (2m) Cord	Description
PS2932BP	PS2932JBP	No Circuit Board
PS294679BP	PS2946J79BP*	Light – 24DC
PS294683BP	PS2946J83BP*	Light – 110/120VAC

* LED with surge suppression.

Note: Max. ø6.5mm cable size required for connector without 6' (2m) cord.
IP65 rated when properly installed.

Engineering Data:
Conductors: 2 Poles Plus Ground
Cable Range (Connector Only): 4 to 6mm (0.16 to 0.24 Inch)
Contact Spacing: 8mm

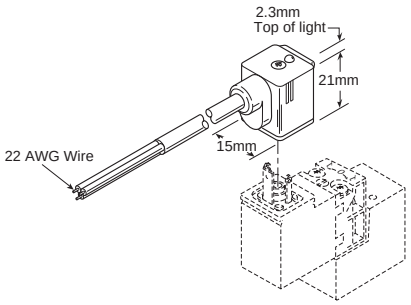

Molded 6' Cord Shown

15mm 3-Pin DIN 43650C Replacement Solenoid Kits

Voltage	Non-Locking	Locking
24VDC	PS2982B49P	PS2982C49P
110/50, 120/60	PS2982B53P	PS2982C53P

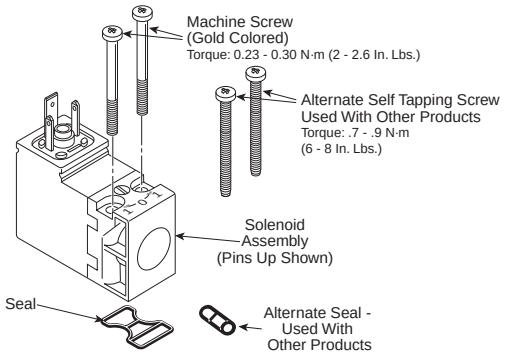

Manifold Hardware Kits

Part Number	Items
DX02M2MB**	Bolt, Washer & Nut*
PS5612P	Tie Rods for PS5611 Manifold (Qty. 12)
PS5512P	Tie Rods for PS5511 Manifold (Qty. 12)

* Includes 10 Bolts, 10 Washers, 10 Nuts

** Use this number for both sizes, PJLP02 & PJLP01.

Torque Specifications: 25 to 35 in-lbs (2.82 to 3.95 Nm)

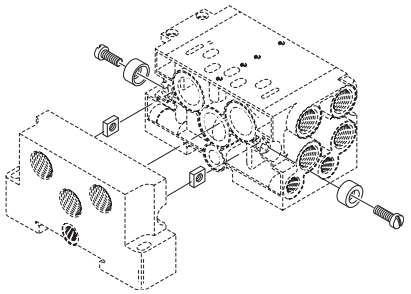

Parker Hannifin Corporation
Pneumatic Division
Richland, Michigan
www.parker.com/pneumatics

Changing from **Internal** to **External** Pilot Supply

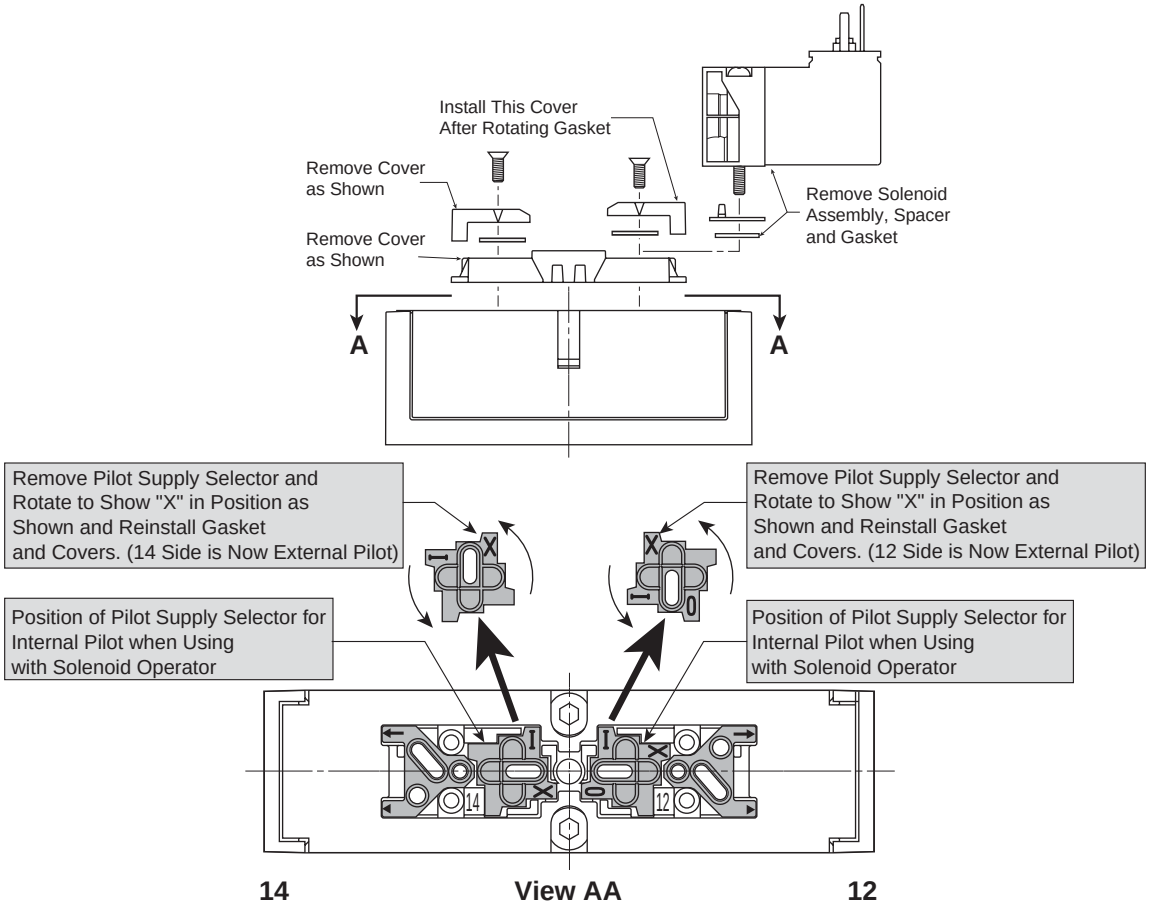

Changing from **External** Pilot Supply, Vented Pilot Exhaust to **Internal** Pilot Supply, Captured Pilot Exhaust

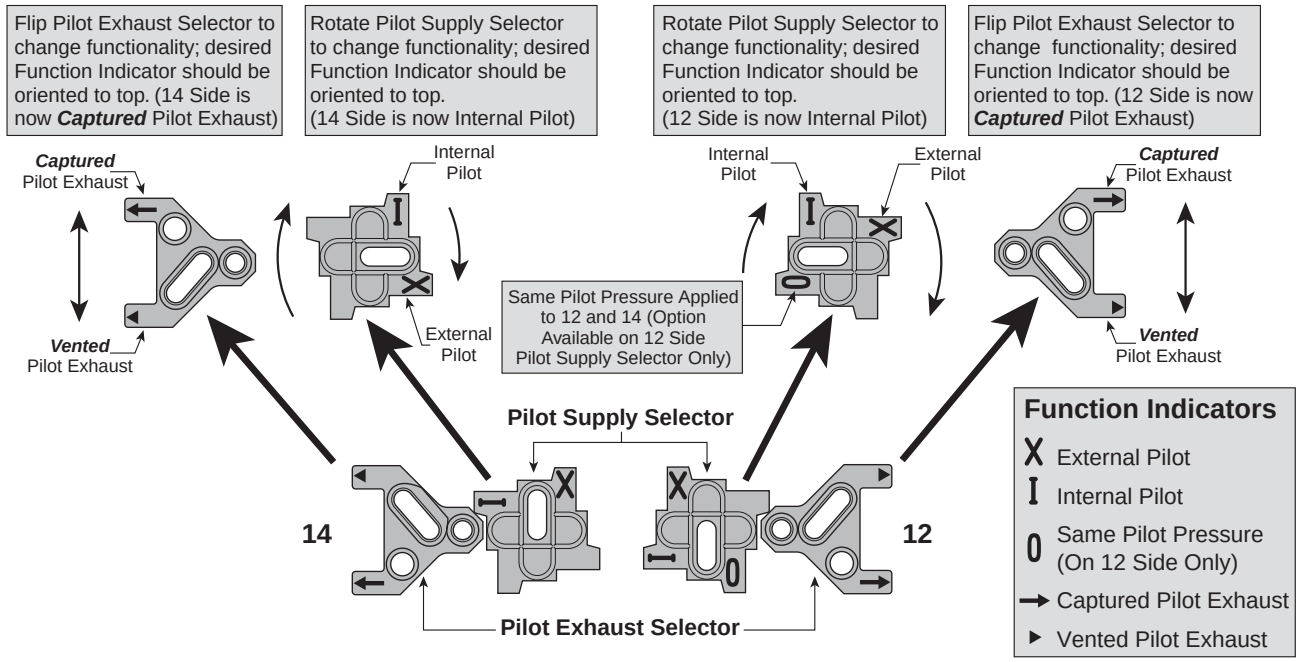

Parker Hannifin Corporation
Pneumatic Division
Richland, Michigan
www.parker.com/pneumatics

Internal Pilot Supply;
Captured Pilot Exhaust through 12

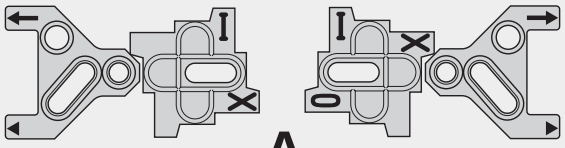

A

External or Single Remote Pilot Supply on 14;
Internal Pilot Supply on 12;
Captured Pilot Exhaust through 12

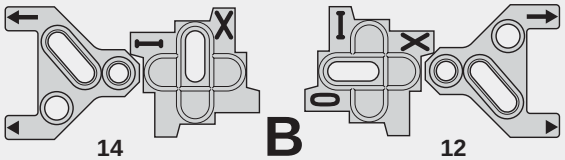

B

External, Double Remote Pilot Supply on 14 & 12;
Captured Pilot Exhaust

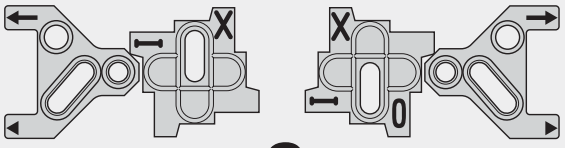

C

Internal Pilot Supply;
Vented Pilot Exhaust

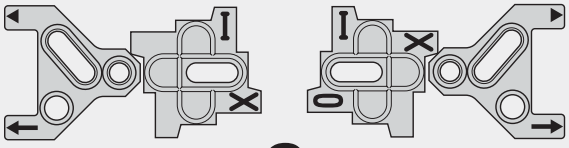

G

External Pilot Supply on 14;
Internal Pilot Supply on 12;
Vented Pilot Exhaust

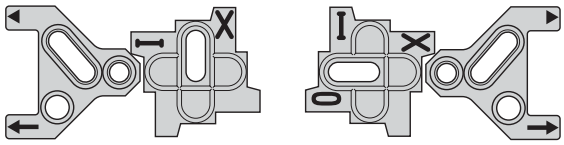

D

External Pilot Supply 14 Common to 12;
Captured Pilot Exhaust through 12

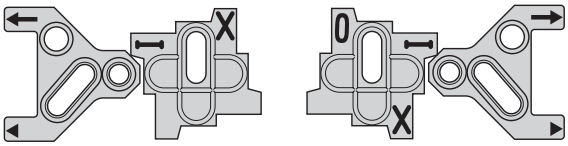

E

Internal Pilot Supply on 14;
External Pilot Supply on 12;
Vented Pilot Exhaust

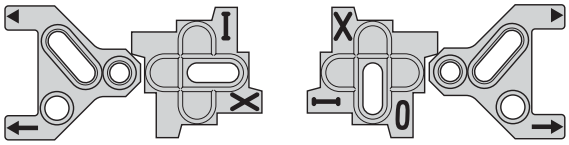

F

Base Pilot Port Used	None	14	14 and 12	None	14	14	12
Pilot Air Supply	**Internal Pilot Supply**	**14 External Pilot 12 Internal Pilot**	**External, Double Remote Pilot for 14 and 12**	**Internal Pilot Supply**	**14 External Pilot 12 Internal Pilot**	**One Common External Pilot Pressure for 14 and 12**	**14 Internal Pilot 12 External Pilot**
Pilot Exhaust	**Captured**	**Captured**	**Captured**	**Vented**	**Vented**	**Captured**	**Vented**
5/2 Double Solenoid	606 A	—	406 C	604 G	D	E	F
5/2 Single Solenoid,	621	421	C	620	D	E	F
Spring Return	A	B		G			
5/2 Single Solenoid, Differential Return	651 A	451 B	C	65 G	D	E	F
5/3 Pressure Center Exhaust	611 A	—	411 C	627 G	D	E	F
5/3 Pressure All Ports Blocked	616 A	—	416 C	625 G	D	E	F
	Part Numbers Available From Factory				**See Gasket Configurations Above for These Special Adaptations**		

Insert a muffler or vent in the EXH Port of the PEJ02 & PEJ01 Manifold End Plates or #12 of PL02 & PL01 Subbases when using solenoids with a ***Captured*** Exhaust.

A plug may be inserted in the EXH Port of the PEJ02 & PEJ01 Manifold End Plates #14 or #12 of PL02 & PL01 Subbases when using a ***Vented*** Exhaust.

Parker Hannifin Corporation
Pneumatic Division
Richland, Michigan
www.parker.com/pneumatics

www.comoso.com

Manifold Assembly

Ports

1 .....Pressure
2 .....#2 Cylinder Port, 1 to 2 Flow Path
3 .....Cylinder Exhaust Port, 2 to 3 Flow Path
4 .....#4 Cylinder Port, 1 to 4 Flow Path
5 .....Cylinder Exhaust Port, 4 to 5 Flow Path
14 .....#14 Pilot Port
12 ..... #12 Pilot Port

Torque Specifications: 25 to 35 in-lbs (2.82 to 3.95 Nm)

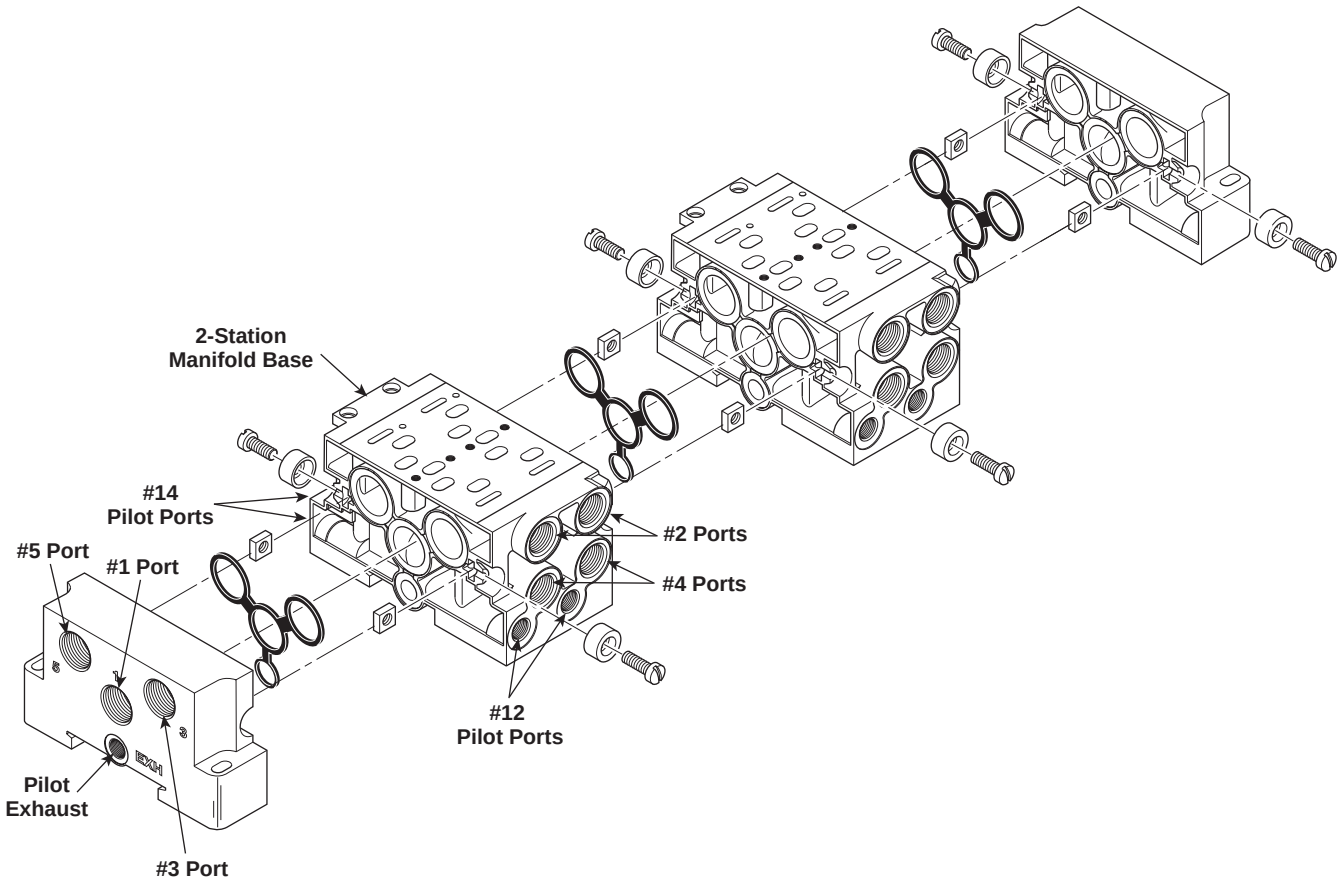

DX01 Shown

Parker Hannifin Corporation
Pneumatic Division
Richland, Michigan
www.parker.com/pneumatics

Captured Pilot Exhaust

PJL01, Size 01

A Built-in 2-Position Selector converts the External Pilot Channel (12) into a Common Solenoid Pilot Exhaust Channel.

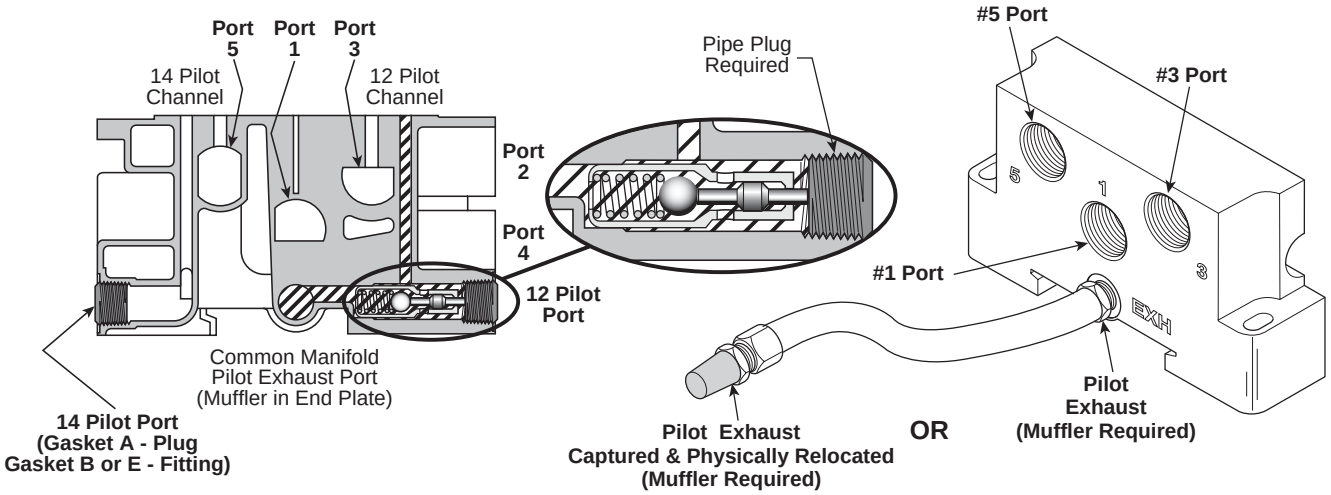

Built-in Selector

When using A, B or E ***Captured*** Selector Gasket Positions, the 12 Pilot Port is plugged. The 14 Pilot Port has a plug when using Gasket A or a fitting when using Gasket B or E. When in place, the Plug in the 12 Pilot Port depresses the Selector to connect the Valve Solenoid Pilot Exhaust to a Common Manifold Exhaust Port. The Plug **must** make contact with the Pin of the Internal Check Valve.

Insert a Muffler in the EXH Port of the End Plate.

Captured Selector Gasket Positions

When using A, B or E Selector Gasket Positions as shown in the schematic at right.

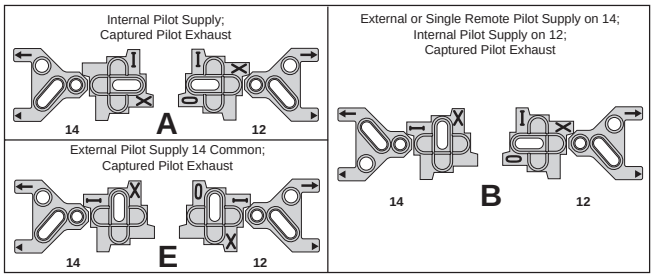

Insert a muffler or vent in the EXH Port of the PEJ02 & PEJ01 Manifold End Plates or #12 of PL02 & PL01 Subbases when using solenoids with ***Captured*** Pilot Exhaust.

DX01 Manifold Assembly Schematic for *Captured* Selector Gasket Positions A, B and E

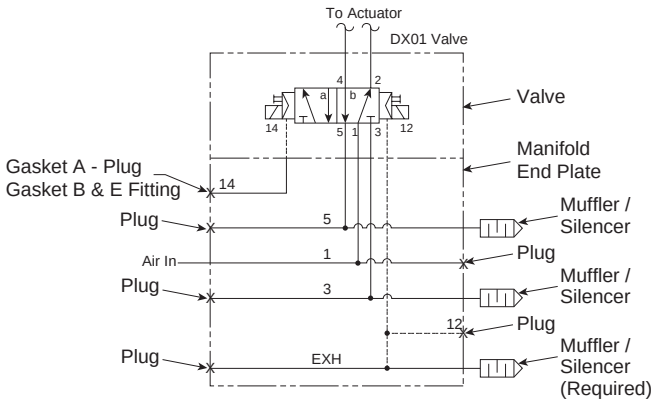

Parker Hannifin Corporation
Pneumatic Division
Richland, Michigan
www.parker.com/pneumatics

Vented
Pilot Exhaust

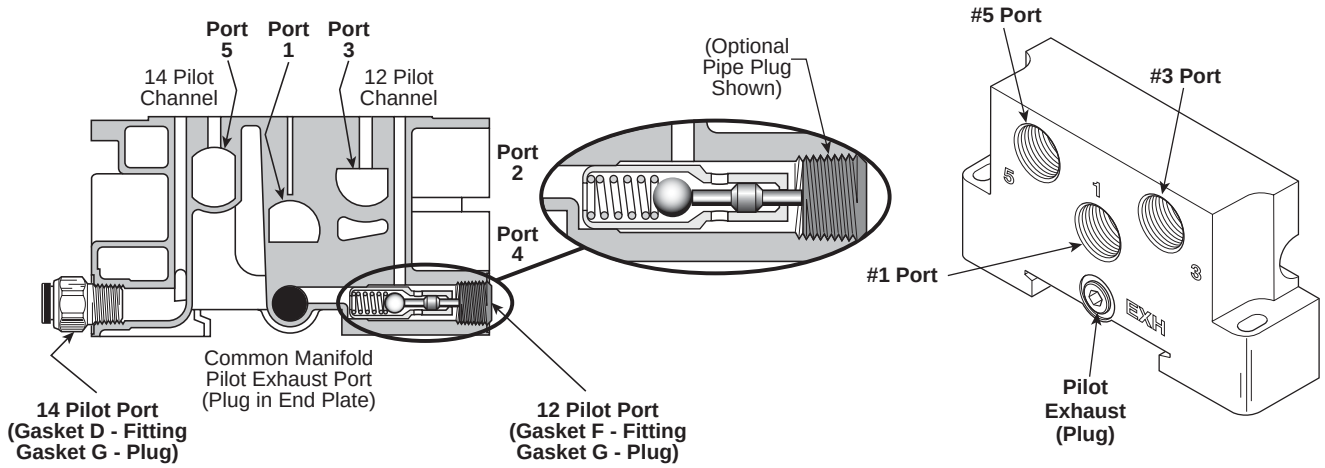

Manifold **End Plate**

Built-in Selector

When using D or G ***Vented*** Selector Gasket Positions, the 12 Pilot Port may be plugged (Optional). The 14 Pilot Port has a plug when using Gasket G or a fitting when using Gasket D or F. The valve solenoid pilot exhaust vents out the pilot adapter on the G Gasket Selection.

Vented Selector Gasket Positions

When using D, F or G Selector Gasket Positions, pilot exhaust air is vented out the valve.

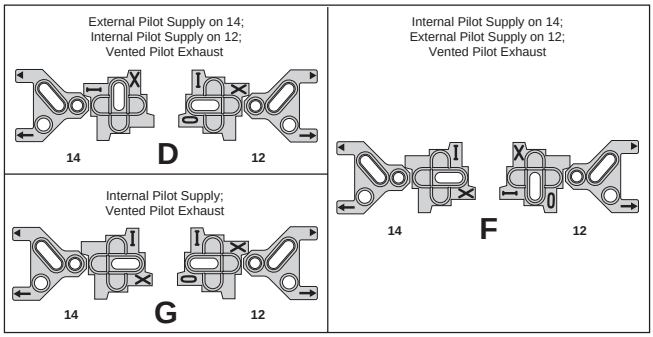

A plug may be inserted in the EXH Port of the PEJ02 & PEJ01 Manifold End Plates, #12 of PL02 & PL01 Subbases.

DX01 Manifold Assembly Schematic for *Vented* Selector Gasket Positions D or G

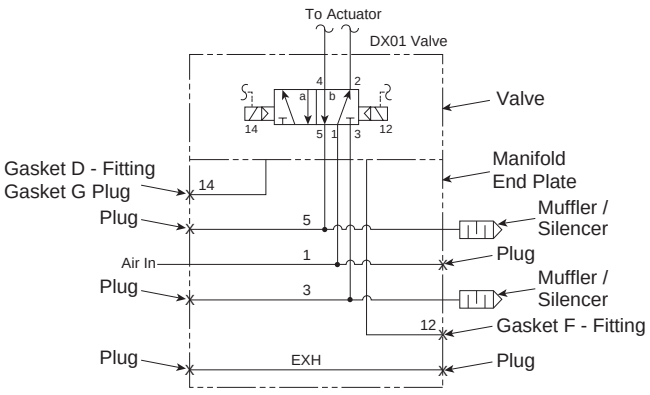

Parker Hannifin Corporation
Pneumatic Division
Richland, Michigan
www.parker.com/pneumatics

External Double Remote Pilot

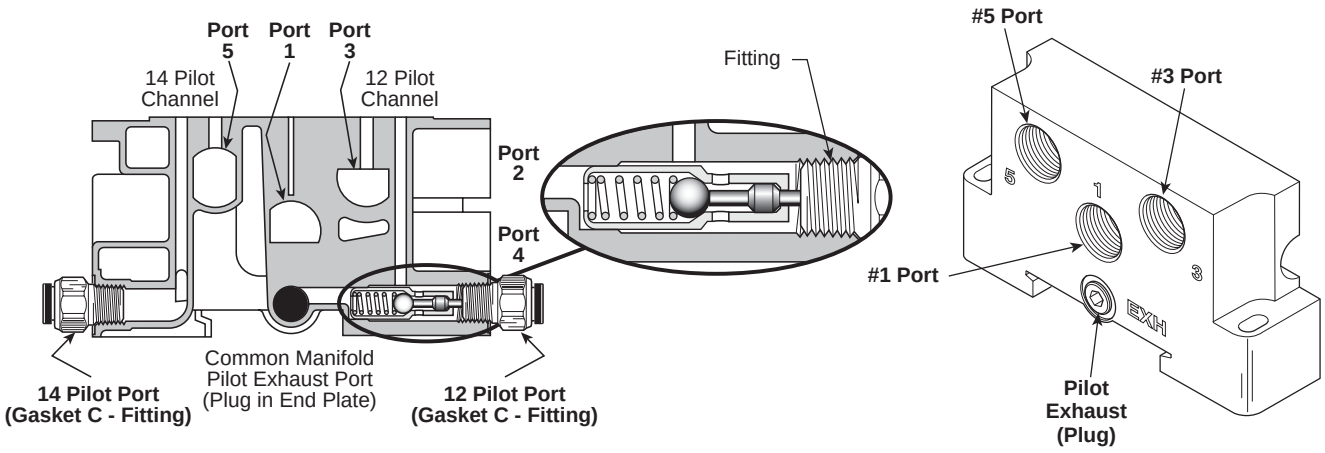

Built-in Selector

When using C ***External Double Remote Pilot*** Selector Gasket Position, a fitting is used in Pilot Port 14 & 12. Free flow between Port 14 & 12 and the valve allows Remote Pilot Pressure and an exhaust path for the captured pilot exhaust.

External Double Remote Pilot Selector Gasket Position

When using C Selector Gasket Position.

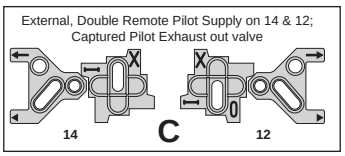

DX01 Manifold Assembly Schematic for *External Double Remote Pilot* Selector Gasket Position C

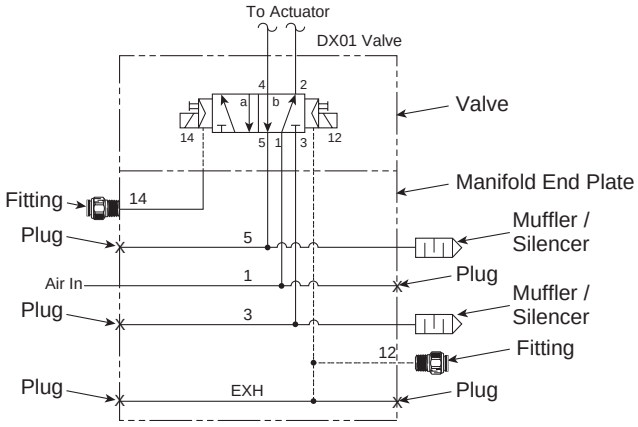

Parker Hannifin Corporation
Pneumatic Division
Richland, Michigan
www.parker.com/pneumatics

Manifold Assembly

Ports

1.....Pressure
2.....#2 Cylinder Port, 1 to 2 Flow Path
3.....Cylinder Exhaust Port, 2 to 3 Flow Path
4.....#4 Cylinder Port, 1 to 4 Flow Path
5.....Cylinder Exhaust Port, 4 to 5 Flow Path
14.....#14 Pilot Port
12.....#12 Pilot Port

Torque Specifications: 25 to 35 in-lbs (2.82 to 3.95 Nm)

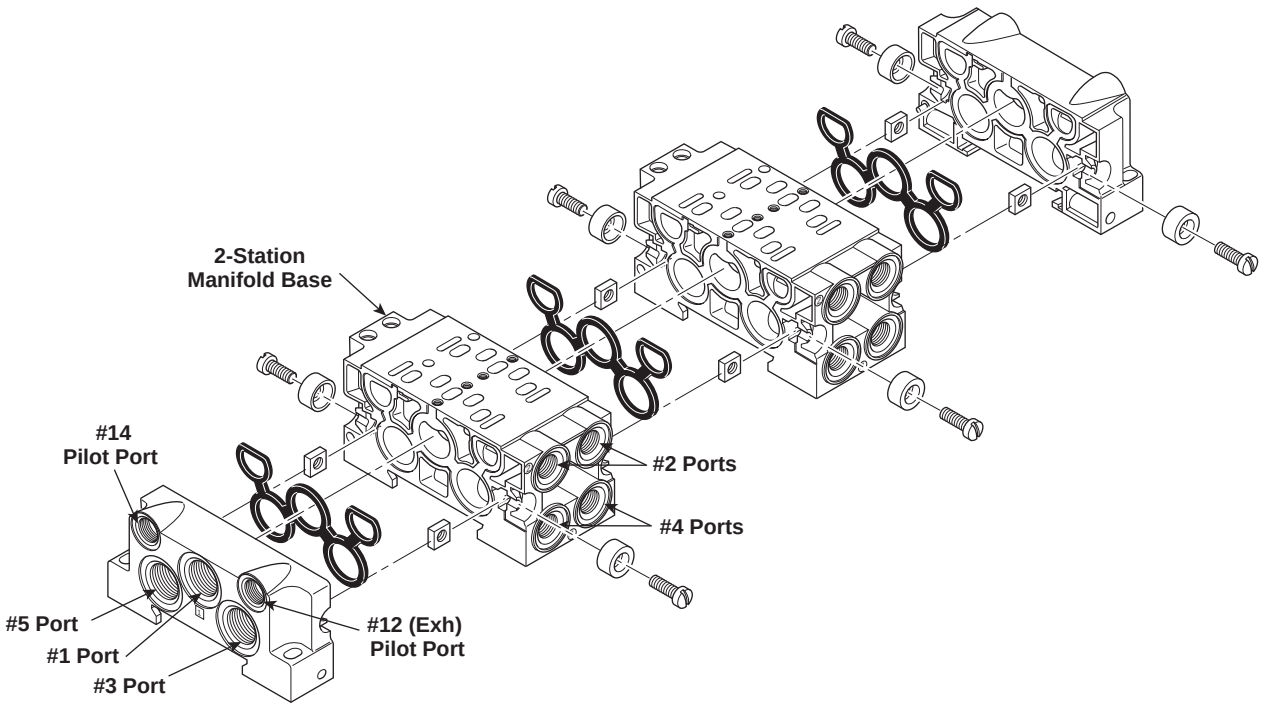

DX02 Shown

Parker Hannifin Corporation
Pneumatic Division
Richland, Michigan
www.parker.com/pneumatics

Captured Pilot Exhaust

PJLP02, Size 02*

As shown in the illustrations below, the EXH (12) & 14 Pilot Ports are exhausted internally in the valve body into a single chamber labeled EXH on the end plate. When using A, B, D or E Selector Gasket Positions, the EXH (12) Pilot Port is vented with a muffler or micron screen. The 14 Pilot Port is plugged.

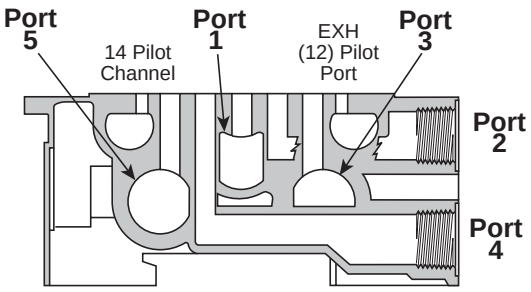

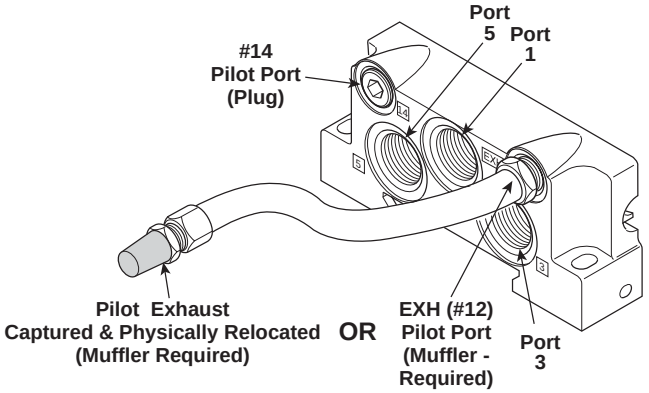

Captured Selector Gasket Positions

When using A, B, D or E, Selector Gasket Positions, the ports must be either plugged or vented with a muffler or micron screen as shown in the schematic at right.

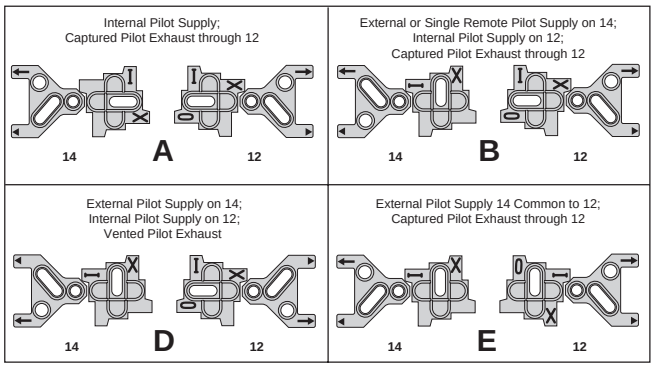

* PJLP02 Manifolds can be used for External Pilot, **NOT** Remote Pilot

DX02 Manifold Assembly Schematic for *Captured* Selector Gasket Positions A, B, D and E

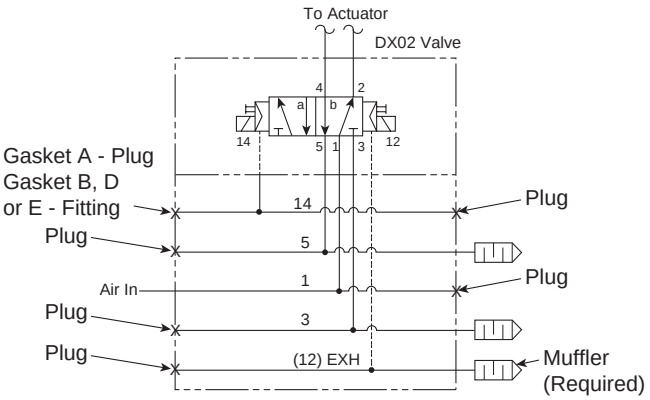

Parker Hannifin Corporation
Pneumatic Division
Richland, Michigan
www.parker.com/pneumatics

Vented
Pilot Exhaust

PJLP02, Size 02

When using F or G Selector Gasket Positions, the EXH (12) Pilot Port and the 14 Pilot Port are plugged and the Pilot Exhaust is vented through the Pilot Adapter.

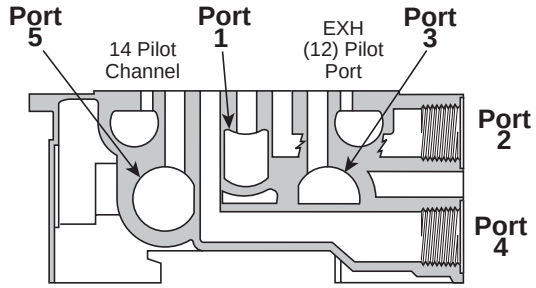

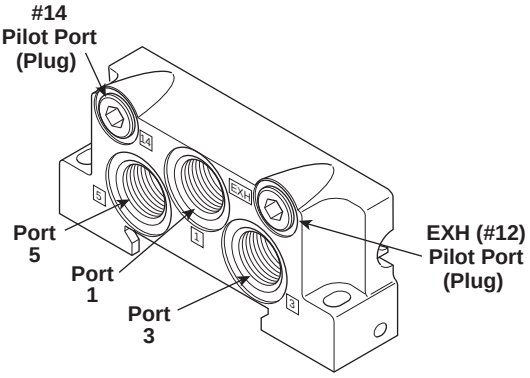

Vented Selector Gasket Positions

When using F or G, Selector Gasket Positions, the ports must be either plugged or vented with a muffler or micron screen as shown in the schematic at right.

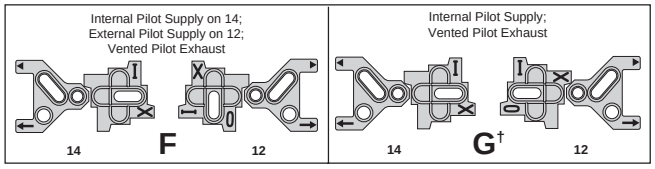

† A plug may be inserted in the EXH Port of the PEJ02 & PEJ01 Manifold End Plates or #12 of PL02 & PL01 Subbases.

DX02 Manifold Assembly Schematic for *Vented* Selector Gasket Positions F and G

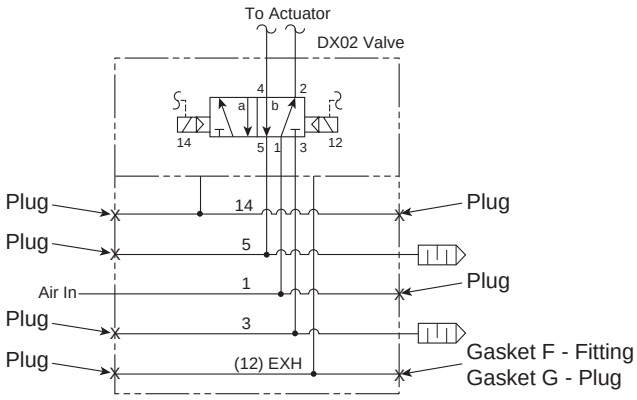

Parker Hannifin Corporation
Pneumatic Division
Richland, Michigan
www.parker.com/pneumatics

Subbase Assembly

Ports

1.....Pressure
2.....#2 Cylinder Port. 1 to 2 Flow Path.
3.....Cylinder Exhaust Port. 2 to 3 Flow Path.
4.....#4 Cylinder Port. 1 to 4 Flow Path.
5.....Cylinder Exhaust Port. 4 to 5 Flow Path.
14..... #14 Pilot Port
12..... #12 Pilot Port

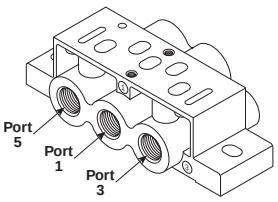

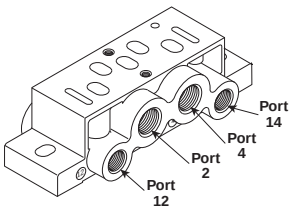

Captured Selector Gasket Positions

When using A, B, C, D or E, Selector Gasket Positions, the ports must be either plugged or vented with a muffler or micron screen as shown in the schematic at right.

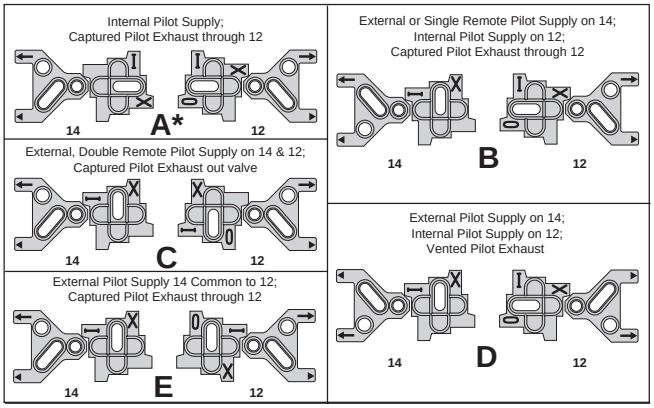

DX02 & DX01 Subbase Assembly Schematic for *Captured* Selector Gasket Positions A, B, C, D and E

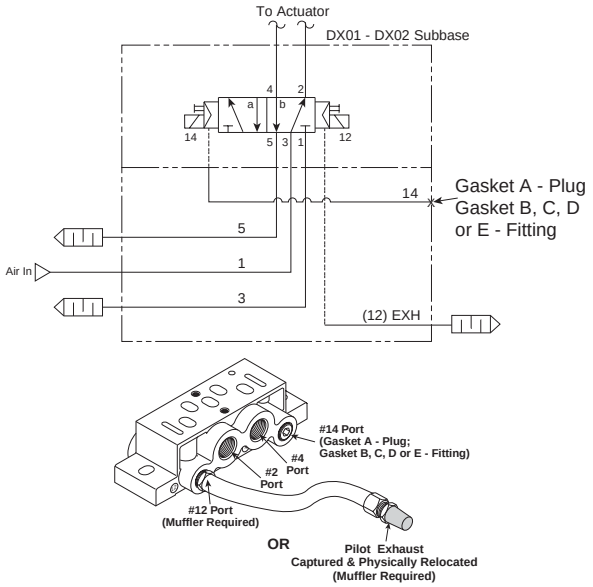

Vented Selector Gasket Positions

When using F or G, Selector Gasket Positions, the ports must be either plugged or vented with a muffler or micron screen as shown in the schematic at right.

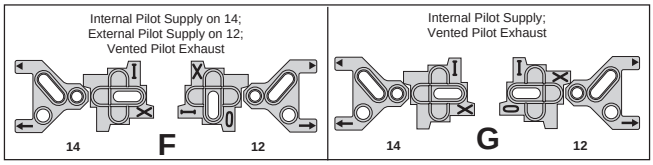

DX02 & DX01 Subbase Assembly Schematic for *Vented* Selector Gasket Positions F and G

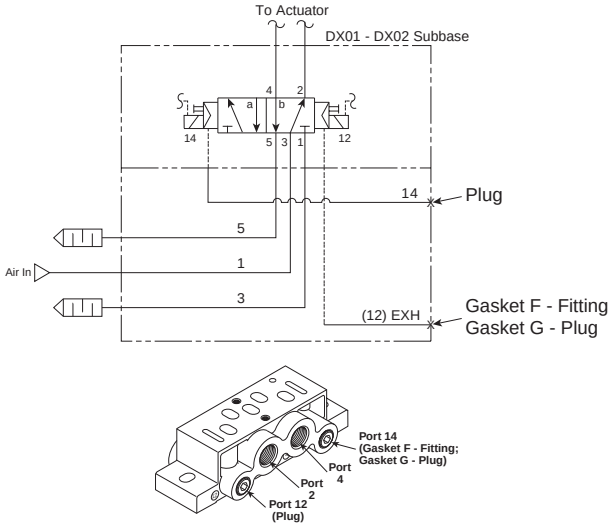

Parker Hannifin Corporation
Pneumatic Division
Richland, Michigan
www.parker.com/pneumatics

DX02
DX01

Valves

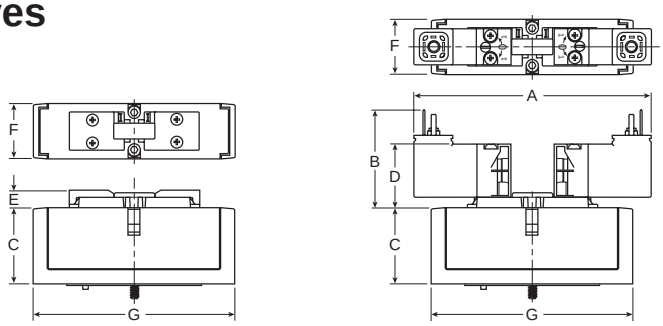

Series	A	B	C	D	E	F	G
DX02	4.06 (103)	1.61 (41)	1.41 (36)	1.06 (27)	.31 (8)	.71 (18)	3.15 (80)
DX01	4.06 (103)	1.61 (41)	1.41 (36)	1.06 (27)	.31 (8)	1.02 (26)	3.94 (100)

Inches (mm)

DX02
DX01

Individual Subbase

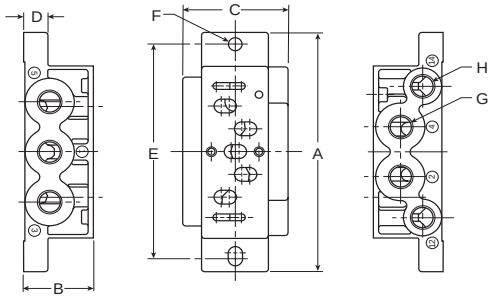

Series	Part Number	A	B	C	D	E	F	G	H
DX02	PL02	3.15 (80)	.87 (22)	1.06 (27)	.31 (8)	2.76 (70)	.216 Dia. (Ø 5.5)	1/8	M5
DX01	PL01	3.94 (100)	1.10 (28)	1.65 (42)	.39 (10)	3.54 (90)	.216 Dia. (Ø 5.5)	1/4	1/8

Inches (mm)

DX02
DX01

2-Station Manifold Bases

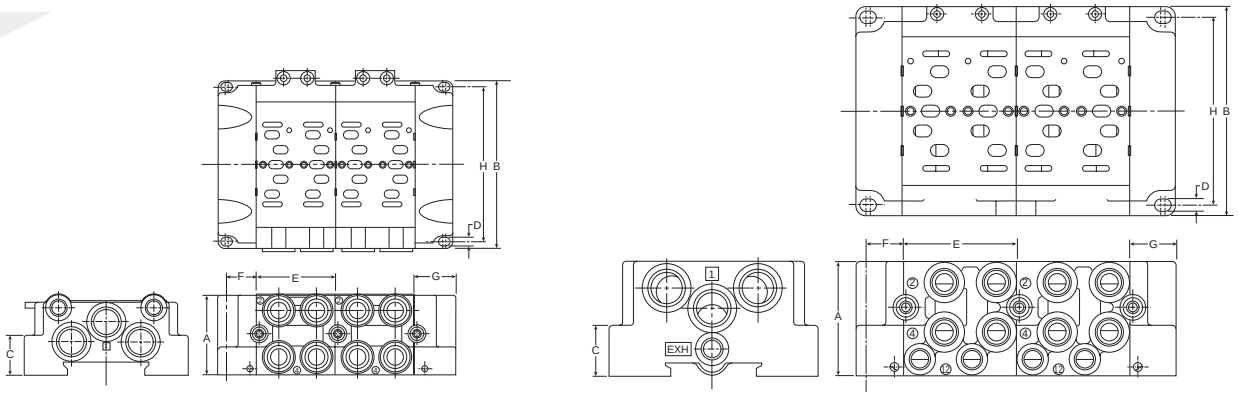

Series	Part Number	A	B	C	D	E	F	G	H
DX02	PJLP02 / PEJ02	1.52 (38.5)	3.15 (80)	.47 (12)	.165 Dia. (Ø 4.2)	1.50 (38)	.55 (14)	.71 (18)	2.83 (72)
DX01	PJL01 / PJLP01 / PEJ01	2.17 (55)	3.94 (100)	.94 (24)	.216 Dia. (Ø 5.5)	2.13 (54)	.67 (17)	.87 (22)	3.54 (90)

Inches (mm)

Parker Hannifin Corporation
Pneumatic Division
Richland, Michigan
www.parker.com/pneumatics

DX01

DX01 15407-1, PS5511 Subbases

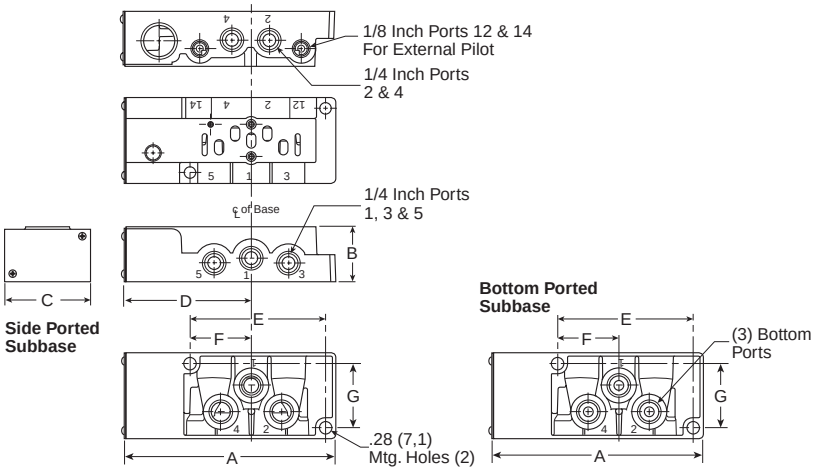

A	B	C	D
4.88 (124)	1.28 (32.5)	2.00 (50.8)	2.91 (74)
E	**F**	**G**	
1.43 (36.2)	3.16 (80.2)	1.49 (37.9)	

Inches (mm)

DX02

DX02 & DX01 15407-1, PS5611 & PS5511 Manifolds

DX01

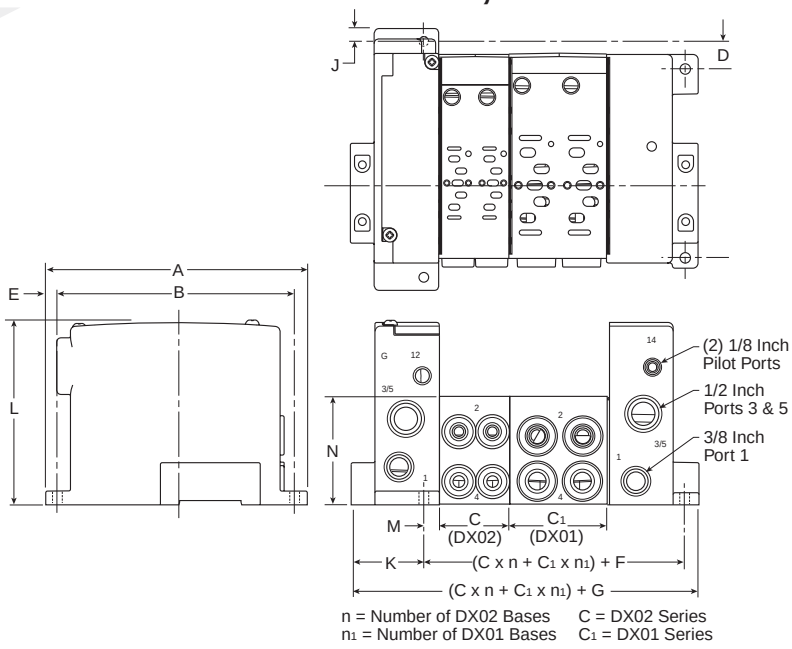

A	B	C	C_1
5.98 (152)	5.39 (137)	1.61 (40.8)	2.24 (56.8)
D	**E**	**F**	**G**
.63 (16)	.30 (7.5)	2.14 (54.4)	4.12 (104.6)
H	**J**	**K**	**L**
4.32 (109.8)	.15 (4)	1.68 (42.7)	4.17 (106)
M	**N**		
.33 (8.4)	2.48 |(63)		

Inches (mm)

DX01

DX02

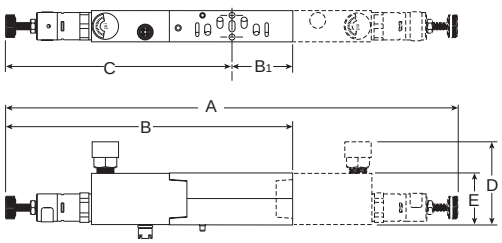

Series	Part Number	A	B	B_1	C	D	E
DX02	PS5637	10.28 (261)	6.14 (156)	1.02 (26)	5.13 (130)	2.60 (66)	1.18 (30)
DX01	PS5537	10.00 (254)	6.42 (163)	1.42 (36)	5.00 (127)	2.72 (69)	1.18 (30)

Inches (mm)

Parker Hannifin Corporation
Pneumatic Division
Richland, Michigan
www.parker.com/pneumatics

ISOMAX 5599-1

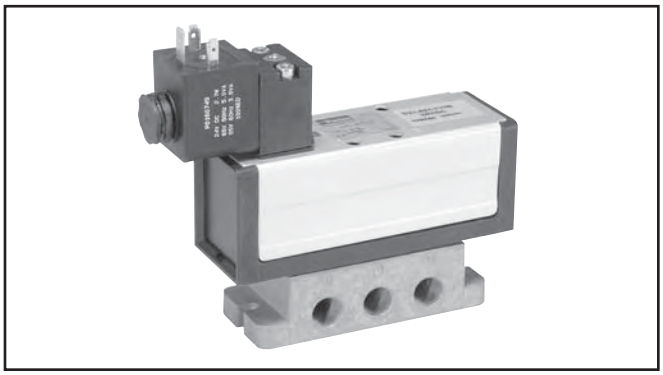

Ceramic Technology / Valve Specifications

- Subbase Mounted Valves Conforming to ISO Standard 5599/1
- High Flow: DX1 (1.15 Cv), DX2 (2.50 Cv), DX3 (4.15 Cv)
- Air or Solenoid Operation Using CNOMO Solenoids
- Can Be Vacuum Operated

Air Condition:
Filtered to 40µ

Dual Pressure Supply from Exhaust Ports:
Yes - Without additional pressure at 12 and 14

Dust and Water Protection:
IP 65 (According to EN 60529)

Mechanical Life:
> 100 million operations (Dry air filtered 40 µ, 2 Hz, 6 bar, 20°C)

Media:
Air or inert gas, filtered 40 µ (Class 5 according to ISO 8573-1), lubricated or non-lubricated

Operating Temperature Range:
-10°C to 60°C (14°F to 140°F)

Flow Rating (Cv)

Size	Port Size	Mounting Style	2-Position	3-Position
DX1	1/4" Ports	Subbase	1.15	0.75
	1/4" Ports	Manifold	0.80	0.60
DX2	3/8" Ports	Subbase	2.50	2.40
	3/8" Ports	Manifold	2.05	1.95
DX3	1/2" Ports	Subbase	4.15	4.00
	1/2" Ports	Manifold	4.10	3.65

Cv tested per ANSI / (NFPA) T3.21.3

Flow Rating (Cv) with Sandwich Regulator

	Common Pressure				Dual Pressure			
	1-2	1-4	2-3	4-5	1-2	1-4	2-3	4-5
DX1	0.55	0.49	1.06	1.02	0.32	0.42	0.25	0.38
DX2	1.06	1.05	2.33	2.17	0.93	0.66	0.77	1.15

Note: All Cv's calculated with regulator adjusted full open.

Response Time**

Single Solenoid 2-Position - Air Return / Spring Assist

Valve Size	Port Size	0 Cu. In. Chamber		## Cu. In. Chamber	
		Fill	Exhaust	Fill	Exhaust
DX1	1/4"	.025	.030	.160	.235
DX2	3/8"	.040	.045	.170	.235
DX3	1/2"	.060	.065	.245	.330

DX1 (50), DX2 (100), DX3 (200)

** With 100 PSIG supply, time required to fill from 0 to 90 PSIG and Exhaust from 100 PSIG to 10 PSIG measured from the instant of energizing or de-energizing 24VDC solenoid.

Tested per ANSI / (NFPA) T3.21.8

Solenoid Information

Code	Voltage			Power (W / VA)
	AC		DC	
	60Hz	50Hz		
19	—	—	24	2.8W
49	—	—	24	2.7W
53	120	115	—	3.7VA

Data tested with LED and Surge Suppression.

Operating Pressure

Vacuum to 145 PSIG (10 bar)

Function		M.O.P. (PSIG)		
Internal Pilot		DX1	DX2	DX3
21	2-Position, Spring Return	36	30	30
51	2-Poswition, Air Return	30	30	30
06	2-Position	15	15	15
11	3-Position, CE	45	36	36
16	3-Position, APB	45	36	36
13	3-Position, PC	45	36	—
External Pilot		DX1	DX2	DX3
22	2-Position, Spring Return	36	30	30
53	2-Position, Air Return	30	30	30
08	2-Position	15	15	15
12	3-Position, CE	45	36	36
18	3-Position, APB	45	36	36
24	3-Position, PC	45	36	—

Material Specification

Body ..... Polyamide Reinforced Fiberglass
Casing - End Plates ..... Anodized Aluminium
Seals ..... Nitrile
Screws ..... Zinc Plated Steel
Valve Member / Seat ..... Self Lubricating / Ceramic
Valve Plate ..... Zinc

Parker Hannifin Corporation
Pneumatic Division
Richland, Michigan
www.parker.com/pneumatics

Single Solenoid

2-Position

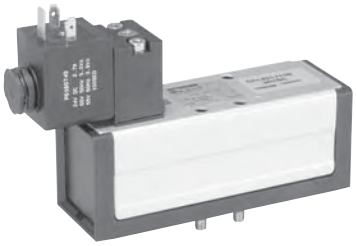

DX1 Shown

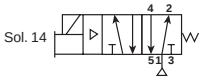

DX1	**DX1-621-BL53**	120VAC	1.15 Cv C = 3.8 Nl/s x bar, b = 0.35 Qn = 1032 l/min, Qmax = 1530 l/min
	DX1-621-BL49	24VDC	
DX2	**DX2-621-BL53**	120VAC	2.50 Cv C = 8.2 Nl/s x bar, b = 0.35 Qn = 2298 l/min, Qmax = 3522 l/min
	DX2-621-BL49	24VDC	
DX3	**DX3-621-BL53**	120VAC	4.15 Cv C = 14.5 Nl/s x bar, b = 0.35 Qn = 3840 l/min, Qmax = 6060 l/min
	DX3-621-BL49	24VDC	

30mm 3-Pin Solenoid, NLMOR, Unlighted, Internal Pilot, Valve Less Base

Double Solenoid

2-Position

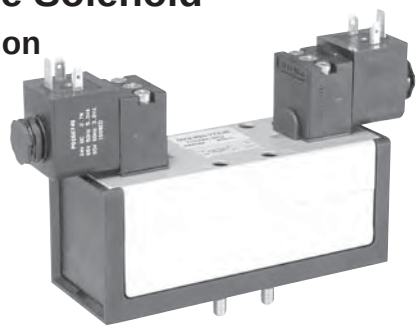

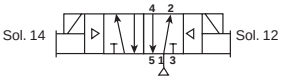

DX1	**DX1-606-BL53**	120VAC	1.15 Cv C = 3.8 Nl/s x bar, b = 0.35 Qn = 1032 l/min, Qmax = 1530 l/min
	DX1-606-BL49	24VDC	
DX2	**DX2-606-BL53**	120VAC	2.50 Cv C = 8.2 Nl/s x bar, b = 0.35 Qn = 2298 l/min, Qmax = 3522 l/min
	DX2-606-BL49	24VDC	
DX3	**DX3-606-BL53**	120VAC	4.15 Cv C = 14.5 Nl/s x bar, b = 0.35 Qn = 3840 l/min, Qmax = 6060 l/min
	DX3-606-BL49	24VDC	

30mm 3-Pin Solenoid, NLMOR, Unlighted, Internal Pilot, Valve Less Base

Double Solenoid

3-Position APB
3-Position CE

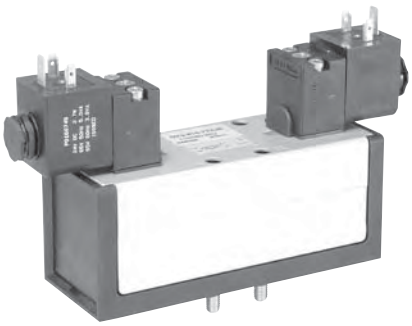

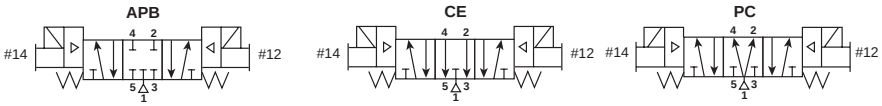

	APB	CE	PC		
DX1	**DX1-616-BL53**	**DX1-611-BL53**	**DX1-613-BL53**	120VAC	0.75 Cv C =2.5 Nl/s x bar, b = 0.35 Qn = 672 l/min, Qmax = 995 l/min
	DX1-616-BL49	**DX1-611-BL49**	**DX1-613-BL49**	24VDC	
DX2	**DX2-616-BL53**	**DX2-611-BL53**	**DX2-613-BL53**	120VAC	2.4 Cv C = 7.9 Nl/s x bar, b = 0.35 Qn = 2206 l/min, Qmax = 3381 l/min
	DX2-616-BL49	**DX2-611-BL49**	**DX2-613-BL49**	24VDC	
DX3	**DX3-616-BL53**	**DX3-611-BL53**	—	120VAC	4.0 Cv C = 13.9 Nl/s x bar, b = 0.35 Qn = 3686 l/min, Qmax = 5815 l/min
	DX3-616-BL49	**DX3-611-BL49**	—	24VDC	

30mm 3-Pin Solenoid, NLMOR, Unlighted, Internal Pilot, Valve Less Base.

Torque Specifications
DX1: 25 to 35 in-lbs (2.82 to 3.95 Nm)
DX2: 115 to 130 in-lbs (12.99 to 14.69 Nm)
DX3: 120 to 1430 in-lbs (13.56 to 15.82 Nm)

For Compact and VDMA Subbase and Manifold, see page E201.
For Hi-Flow Subbases and Manifolds, see page E202.

Parker Hannifin Corporation
Pneumatic Division
Richland, Michigan
www.parker.com/pneumatics

BOLD OPTIONS ARE MOST POPULAR

Basic Series	
ISO 5599-1	**DX1 - Size 1**
ISO 5599-1	**DX2 - Size 2**
ISO 5599-1	**DX3 - Size 3**

Pilot	
Air Operated Remote Pilot	**4**
Solenoid Operated	**6**

Function	
Internal Pilot Supply	
2-Position, Spring Return, Air Assist	**21**
2-Position, Diff Return	**51**
2-Position	**06**
3-Position, CE	**11**
3-Position, APB	**16**
3-Position, PC	**13***
External Pilot Supply†	
2-Position, Spring Return, Air Assist	22
2-Position, Diff Return	53
2-Position	08
3-Position, CE	12
3-Position, APB	18
3-Position, PC	24*

* Not offered with DX3 Valves.
† Must be specified when using Sandwich Regulators.

Voltage & Frequency			
	AC		DC
	60Hz	50Hz	
19*			24
49			**24**
53	**120**	**110**	
Blank	Remote Pilot or Valve Less Coil		

* LED & Surge Suppression.
Only Available with Enclosure "6".

5599-1 Enclosure / Lead Length / Light	
0**	**None, Remote Pilot Valve**
6*	2-Pin, M12 EURO Connector with CNOMO Operator, Light
L	**3-Pin, 30mm DIN 43650A with CNOMO Connector, No Light**
P	3-Pin, 22mm Industrial with CNOMO Connector, No Light
N†	None, Valve Less Coil, No Light

* Only available with Voltage & Frequency "19".
**Must use Overrides Option "6".
† Must use Overrides Option "B" or "C".

5599-1 Overrides	
6	**Remote Pilot / Without Solenoid**
B	**Non-Locking, Flush, Push**
C	Locking, Flush, Push / Turn

Parker Hannifin Corporation
Pneumatic Division
Richland, Michigan
www.parker.com/pneumatics

www.comoso.com

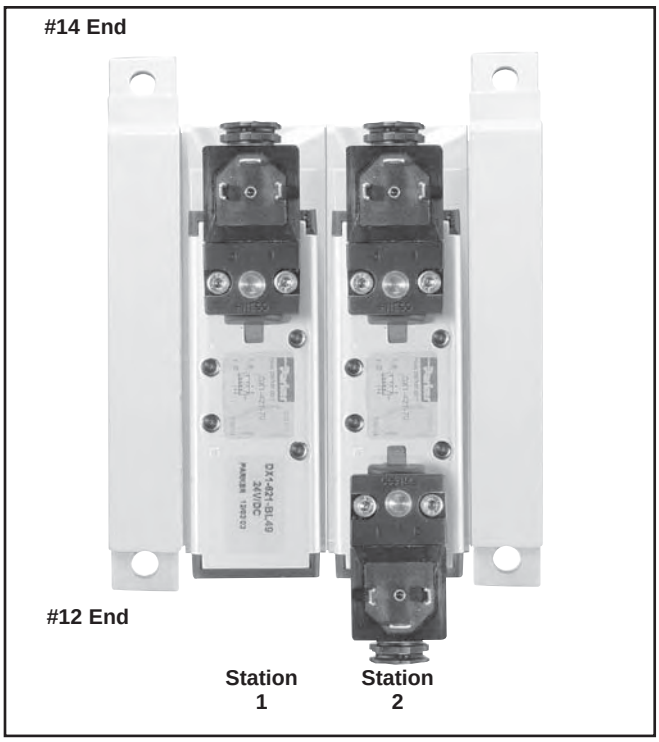

How To Order Add-A-Fold Assemblies

1. List Add-A-Fold Assembly call out. This automatically includes the end plate kit assembly.
2. List complete valve/base model number. List left to right, LOOKING AT THE CYLINDER PORTS on the #12 end of the manifold. The left most station is station 1.

   (If a blank station is needed, list the blanking plate part number and the individual manifold number in the station specified.)

Model Number

AA H1 S 0 03 —

Valve Series	
DX1, ISO Size 1	H1
DX2, ISO Size 2	H2
DX3, ISO Size 3	H3

End Plate Type	
Standard Non-Collective Wiring	S
VDMA, 5599-1	V

Port Type	
NPT	0
BSPP "G"	1

Number of Stations	
01	1 Station
•	•
•	•
•	•
21	21 Stations

Transition Plate	
Blank	No Transition Plate
C*	DX1 to DX2
D*	DX1 to DX3
E**	DX2 to DX3

* Use DX1 Valve Series.
** Use DX3 Valve Series.

Example: Application requires a 2-Station manifold.

Qty.	Part No.
1	AAH2S002
1	DX2-621-BL49..... Valve Station 1
1	PS4111570CP.....Base Station 1
1	DX2-606-BL49 ..... Valve Station 2
1	PS4111570CP.....Base Station 2

Parker Hannifin Corporation
Pneumatic Division
Richland, Michigan
www.parker.com/pneumatics

www.comoso.com

5599-1 Compact Manifolds, Subbases & Accessories

Manifold VDMA – Form C Bottom Port

Size	Port Size	Kit Number
		BSPP "G"
DX1	1/4"	P2N-VM512MB
DX2	3/8"	P2N-WM513MB
DX3	1/2"	P2N-YM514MB

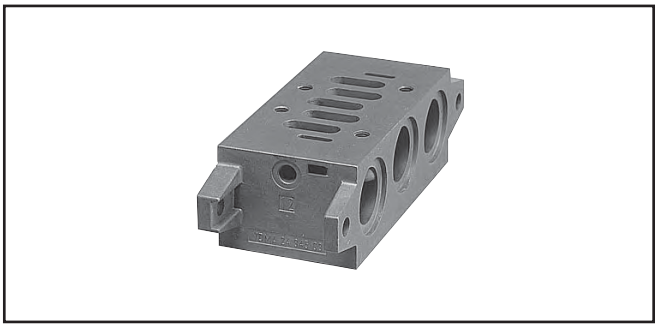

VDMA End Plates – Form D

Size	Port Size	Kit Number
		BSPP "G"
DX1	3/8"	P2N-VM513ES
DX2	1/2"	P2N-WM514ES
DX3	1"	P2N-YM518ES

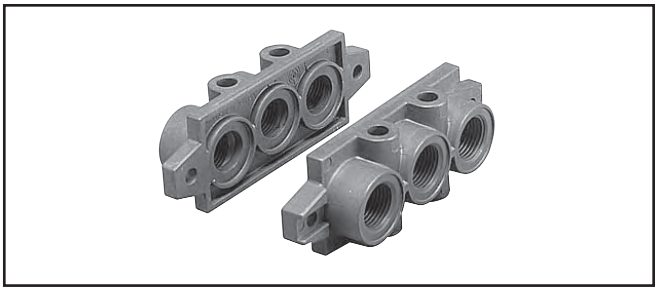

Subbase – Side Ports (5599-1 & VDMA)

Size	Port Size	5599-1 Kit Number		VDMA Kit
		NPT	BSPP "G"	BSPP "G"
DX1	1/4"	**PL1-1/4-80**	PL1-1/4-70	P2N-VS512SD
DX2	3/8"	**PL2-3/8-80**	PL2-3/8-70	P2N-WS513SD
DX3	1/2"	PL3-1/2-80	PL3-1/2-70	P2N-YS514SD

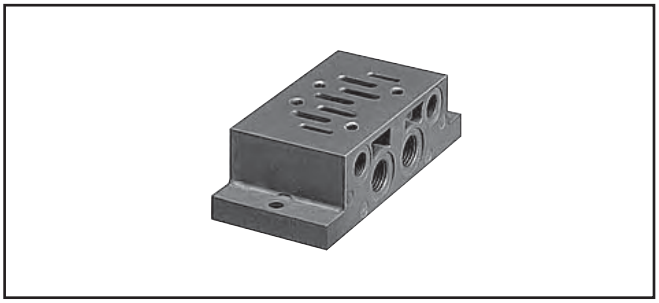

Subbase – Bottom Ports

Size	Port Size	5599-1 Kit Number	
		NPT	BSPP "G"
DX1	1/4"	PD1-1/4-80	PD1-1/4-70
DX2	3/8"	PD2-3/8-80	PD2-3/8-70

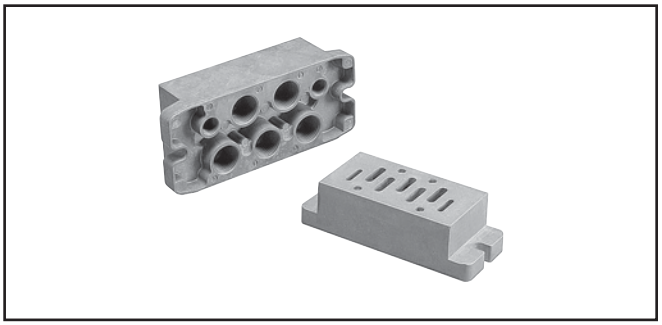

VDMA Transition Plate

Kit Number
P2N-VM500AK

Kit includes: Transition Plate Only. Order P2N-VM513ES and P2N-YM518ES Separately to Assemble Add-A-Fold

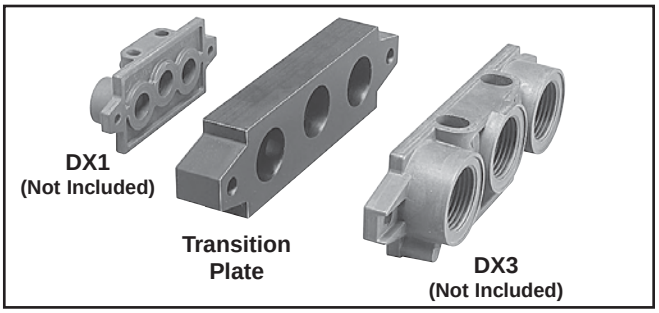

Parker Hannifin Corporation
Pneumatic Division
Richland, Michigan
www.parker.com/pneumatics

5599-1, DX1, DX2 & DX3
Hi-Flow Manifold / Subbase Kits

PS401155 0 C P

Enclosures / Lead Length	
0	None, No Electrical Plug - 5599-1

Mounting Base Style / Port Size					
DX1 Series		DX2 Series		DX3 Series	
Subbase: 3/8 NPT Side Ports	**PS401115**	**Subbase: 1/2 NPT Side Ports**	**PS411117**	**Subbase: 3/4 NPT Side Ports**	**PS421119**
Subbase: 3/8 BSPP Side Ports	PS401116	Subbase: 1/2 BSPP Side Ports	PS411118*	Subbase: 3/4 BSPP Side Port	PS421110*
Manifold: 3/8 NPT End Ports	**PS401155**	Subbase: 1/2 NPT Bottom / End Port	PS411127	Subbase: 3/4 NPT Bottom / End Port	PS421129
Manifold: 3/8 BSPP End Ports	PS401156*	Subbase: 1/2 BSPP Bottom / End Port	PS411128*	Subbase: 3/4 BSPP Bottom / End Port	PS421120*
Manifold: 3/8 NPT Bottom / End Port	PS401165†	**Manifold: 1/2 NPT End Port**	**PS411157**	**Manifold: 3/4 NPT End Port**	**PS421159**
Manifold: 3/8 BSPP Bottom / End Port	PS401166*†	Manifold: 1/2 BSPP End Ports	PS411158*	Manifold: 3/4 BSPP End Port	PS421150*
		Manifold: 1/2 NPT Bottom / End Port	PS411167	Manifold: 3/4 NPT Bottom / End Port	PS421169
		Manifold: 1/2 BSPP Bottom / End Port	PS411168*	Manifold: 3/4 BSPP Bottom / End Port	PS421160*

* BSPP Conforms to ISO 1179-1 w 228-1 Theads.
† #1 Bottom Port - 1/4".

Subbase Kits

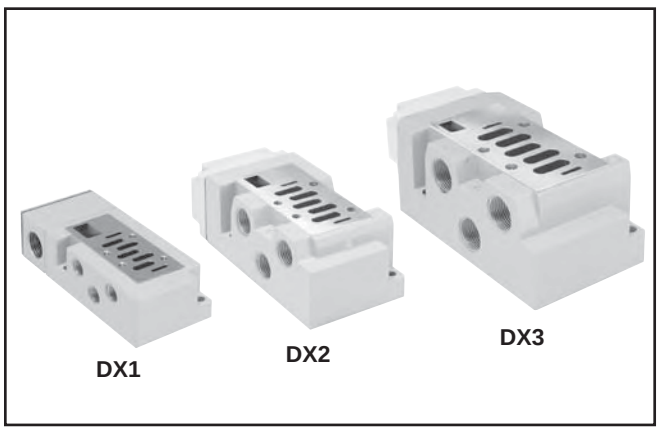

Manifold Kits

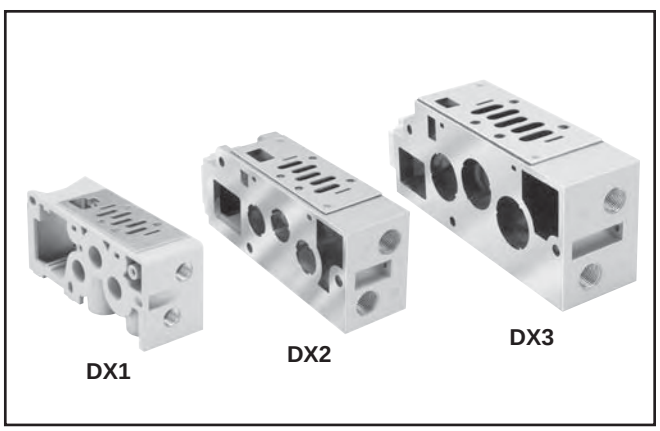

Parker Hannifin Corporation
Pneumatic Division
Richland, Michigan
www.parker.com/pneumatics

www.comoso.com

5599-1, DX1, DX2 & DX3
End Plate Kits for PS4 Manifolds

PS403101 0 C P

Basic Series	
DX1	PS403101
DX2	PS413101
DX3	PS423101

Thread Type	
0	NPT
1	BSPP "G"

Engineering Level	
C	Current

DX1 Non-Collective Wiring End Plates

5599-1, DX1, DX2 & DX3
Transition Plate Kits for PS4 Manifolds

PS402701 0 C P

Transition Plate Type	
DX1 to DX2 to DX3	PS402501
DX1 to DX3	PS402601
DX1 to DX2	PS402701
DX2 to DX3	PS402801

Thread Type	
0	NPT
1	BSPP "G"

Engineering Level	
C	Current

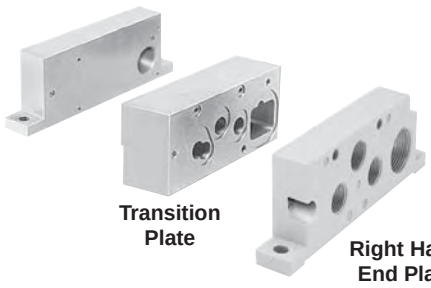

DX1 to DX2 Shown

Parker Hannifin Corporation
Pneumatic Division
Richland, Michigan
www.parker.com/pneumatics

www.comoso.com

Blanking Plate Kits

Size	Kit Number
DX1	PS4034CP
DX2	PS4134CP
DX3	PS4234CP

Kit includes: Blanking Plate, Gasket, and Mounting Bolts.

Remote Pilot Access Plate Kits

Size	Port Size	Kit Number	
		NPT	BSPP "G"
H1	1/8"	PS401500CP	PS401501CP
H2	1/8"	PS411500CP	PS411501CP
H3	1/8"	PS421500CP	PS421501CP

Kit includes: Pilot Port Access Plate, Gasket and Mounting Studs.

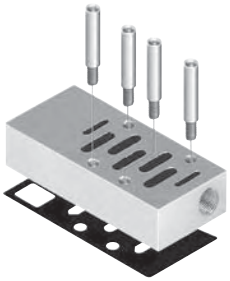

Manifold Port Isolation Kits

Main Galley (1, 3, 5)

Size	Kit Number	
	PS4 Manifolds	P2N Manifolds
DX1	PS4032CP	P2N-VK0P
DX2	PS4132CP	P2N-WK0P
DX3	PS4232CP	P2N-YK0P

Kit includes: Plugs with O-rings.

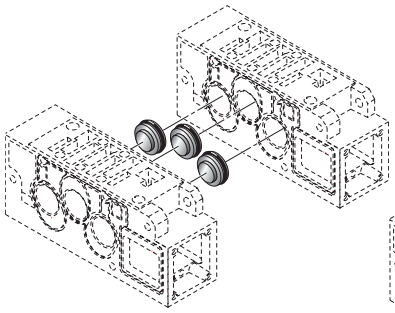

DX1, DX2, DX3 Main Galley

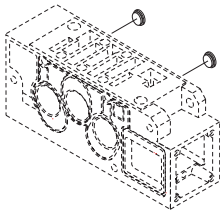

DX1, DX2, DX3 Pilot Galley

Pilot Galley

Size			Kit Number
DX1	DX2	DX3	PS4033CP

Kit includes: Plugs with O-rings.
For use with PS4 Series Manifolds.

Sandwich Flow Controls Features

- Both adjustment screws are located on the 12 end of the unit.
- Sandwich Flow Control mounts with its own studs, which means the valve uses standard bolts for mounting.
- Sandwich Flow Control is not to be used as a shut off device and is not bubble tight when needles are fully turned down.

Size	Kit Number
DX1	PS4042CP
DX2	PS4142CP
DX3	PS4242CP

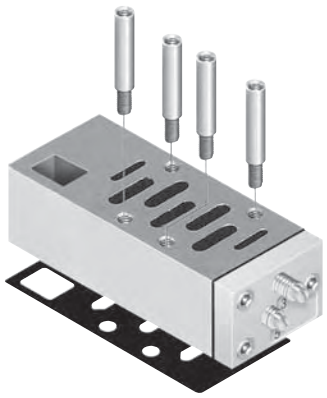

DX2 Shown

Parker Hannifin Corporation
Pneumatic Division
Richland, Michigan
www.parker.com/pneumatics

Sandwich Regulators Features

- Remote Air Pilot Operated for hard-to-reach pressure control.
- Unregulated Pilot Pressure to valve for consistent valve shifting regardless of pressure adjustment.

DX1 - Size 1
(Independent Dual Port Regulator Shown)

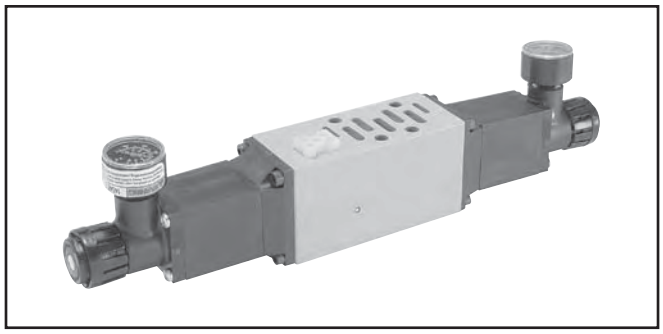

DX2 - Size 2
(Independent Dual Port Regulator Shown)

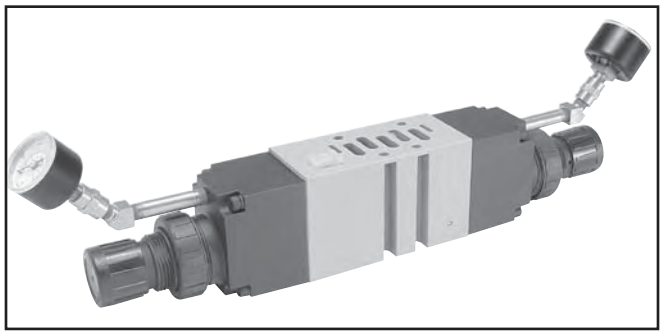

BOLD OPTIONS ARE MOST POPULAR

PS4037 | 1 | 6 | 6 | C | P

Basic Series	
DX1	
5599-1	PS4037
DX2	
5599-1	PS4137
DX3	
5599-1	PS4237

Regulator Function	
Common Pressure Regulator	1
Independent Pressure Regulator	2

#2 Port Regulator / Gauge*	
0**	Line By-Pass Plate
4	1-30 PSIG w/Gauge
5	2-60 PSIG w/Gauge
6	5-125 PSIG w/Gauge

* For Common Pressure Regulator Option, Regulator Gauge callout must be the same number for both Port #4 and Port #2. (Example: 166)

** Pressure Line By-Pass Option can only be used with Independent and Selector Regulators (Option 2 & 3 in Sandwich Block Function).

#4 Port Regulator / Gauge*	
0**	Line By-Pass Plate
4	1-30 PSIG w/Gauge
5	2-60 PSIG w/Gauge
6	5-125 PSIG w/Gauge

* For Common Pressure Regulator Option, Regulator Gauge callout must be the same number for both Port #4 and Port #2. (Example: 166)

** Pressure Line By-Pass Option can only be used with Independent and Selector Regulators (Option 2 & 3 in Sandwich Block Function).

Ordering Components
- *Manifold or Subbase Kit required.*
- *Sandwich Regulator Kit configured for Internal Pilot as standard.*
- *Order valve as External Pilot.*

How to Configure Sandwich Regulator / Valve Combinations

Internal Pilot Configuration -
Pressure in Base Port 1 feeds regulator configured for Internal Pilot which feeds valve configured for External Pilot.

External Pilot Configuration - DX1, DX2, DX3
An External Pilot pressure in Port 12 or 14 of the base feeds thru the Sandwich Regulator 12 or 14 galley directly to the 12/14 pilot of the valve. This configuration takes an External Pilot from the 12 port of the base and passes it thru the regulator to feed the 12 galley of the valve.

Parker Hannifin Corporation
Pneumatic Division
Richland, Michigan
www.parker.com/pneumatics

www.comoso.com

Female Electrical Connectors / Accessories

30mm Square 3-Pin – ISO 4400, DIN 43650A (Use with Enclosure "A")

Connector	Connector with 6' (2m) Cord	Description
PS2028BP	PS2028JCP	Unlighted
PS203279BP	PS2032J79CP*	Light – 6-48V, 50/60Hz, 6-48VDC
PS203283BP	PS2032J83CP*	Light – 120V/60Hz
PS203283BP	N/A	Light – 240V/60Hz

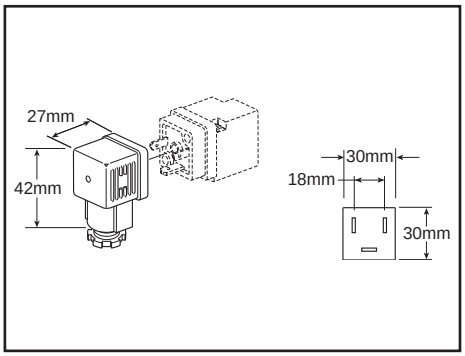

* LED with surge suppression.

Note: Max ø6.5mm cable size required for connector w/o 6' (2m) cord. IP65 rated when properly installed.

Engineering Data:

Conductors: 2 Poles Plus Ground; Cable Range (Connector Only): 8 to 10mm (0.31 to 0.39 Inch); Contact Spacing: 18mm

22mm Rectangular 3-Pin – Type B Industrial (Use with Enclosure "B")

Connector	Connector with 6' (2m) Cord	Description
PS2429BP	PS2429JBP	Unlighted
PS243079BP	PS2430J79BP*	Light – 24V60Hz, 24VDC
PS243083BP	PS2430J83BP*	Light – 120V/60Hz
PS243087BP	N/A	Light – 240V/60Hz

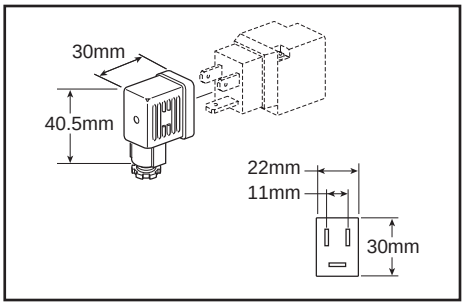

* LED with surge suppression.

Note: Max ø6.5mm cable size required for connector w/o 6' (2m) cord. IP65 rated when properly installed.

Engineering Data:

Conductors: 2 Poles Plus Ground; Cable Range (Connector Only): 6 to 8mm (0.24 to 0.31 Inch); Contact Spacing: 11mm

CNOMO Operator Adapter

Description	Kit Number
Operator Adapter	**PS2855P**

PS2855P

5599-1 CNOMO Solenoid Kits

Voltage Code	3-Pin 30mm 'L' Coil Kit	2-Pin M12 Euro '6' Coil Kit
19 (24VDC)	—	PS2828619P
42 (24VAC)	P2FCA442	—
45 (12 VDC)	P2FCA445	—
49 (24 VDC)	P2FCA449	—
53 (120VAC)	P2FCA453	—
57 (240VAC)	P2FCA457	—

Quantity 1

CNOMO Operator Kit

Description	Kit Number
Locking 30mm CNOMO Pilot Operator with Diffuser Nut	**PS4052CP**
Non-Locking 30mm CNOMO Pilot Operator with Diffuser Nut	**PS4053CP**

Parker Hannifin Corporation
Pneumatic Division
Richland, Michigan
www.parker.com/pneumatics

www.comoso.com

DX1
DX2
DX3

DX1 / DX2 / DX3

Internal / External Pilot Conversion Instructions

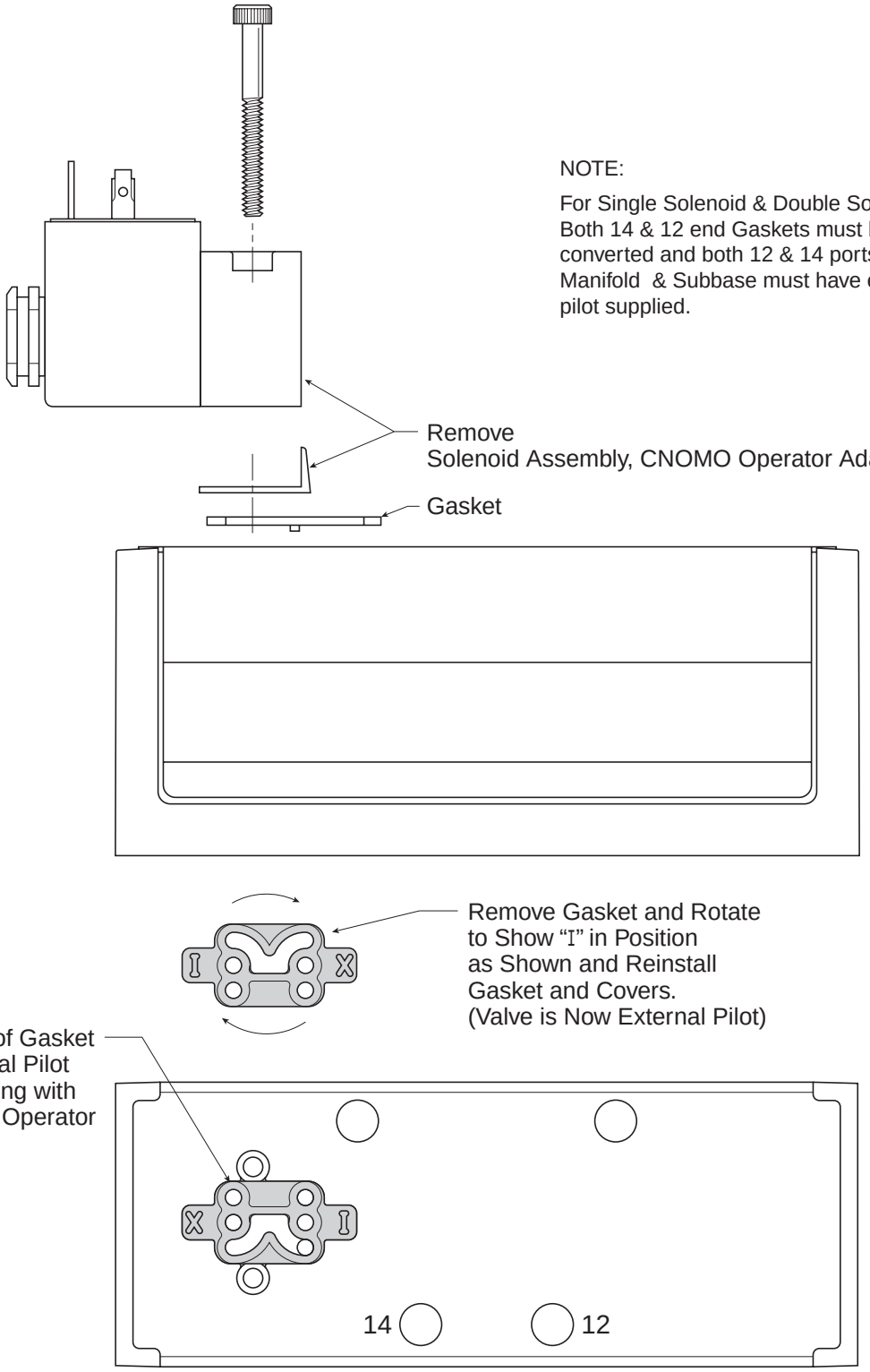

NOTE:

For Single Solenoid & Double Solenoid – Both 14 & 12 end Gaskets must be converted and both 12 & 14 ports in the Manifold & Subbase must have external pilot supplied.

Parker Hannifin Corporation
Pneumatic Division
Richland, Michigan
www.parker.com/pneumatics

DX1
DX2
DX3

Air Operated Valves

Series	A	B	C	D
DX1	4.72 (120)	1.65 (42)	1.85 (47)	.20 (5)
DX2	5.51 (140)	2.13 (54)	2.30 (58.5)	.20 (5)
DX3	6.69 (170)	2.68 (68)	2.80 (71)	.20 (5)

Inches (mm)

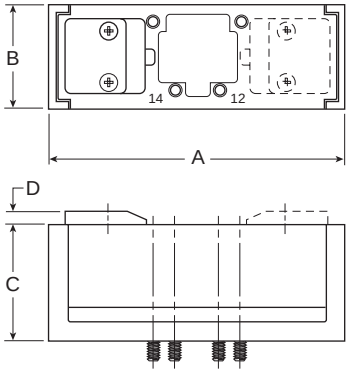

DX1
DX2
DX3

Solenoid Operated Valves

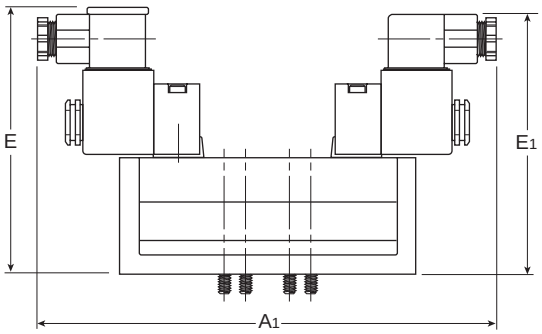

Series	A_1	E	E_1	E_2
DX1	7.97 (202.5)	4.43 (112.5)	4.69 (119)	4.53 (115)
DX2	8.58 (218)	4.86 (123.5)	5.12 (130)	4.98 (126.5)
DX3	9.27 (235.5)	5.35 (136)	5.61 (142.5)	5.47 (139)

Inches (mm)

Parker Hannifin Corporation
Pneumatic Division
Richland, Michigan
www.parker.com/pneumatics

DX1
DX2
DX3

VDMA & 5599-1 Side Ported Subbase

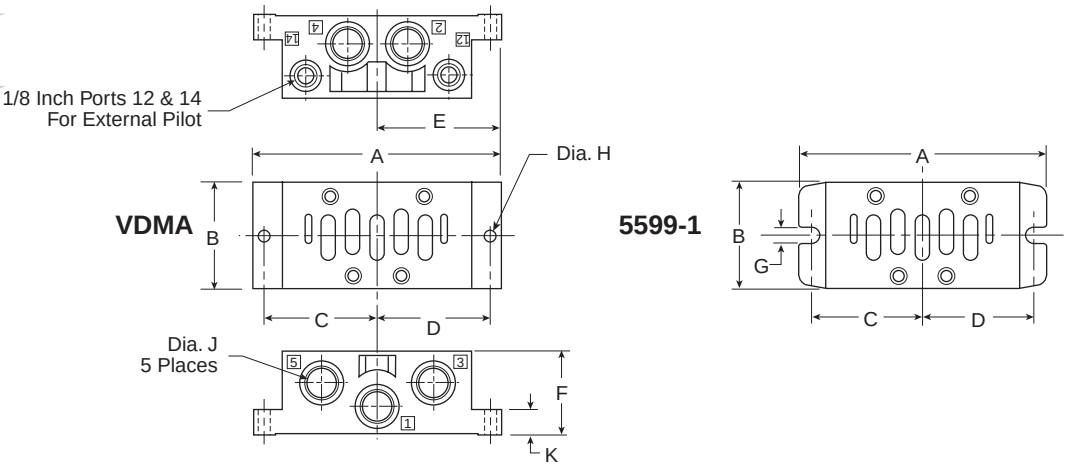

	Series	Part Number	J	A	B	C	D	E	F	G	H	K
VDMA	DX1	P2N-VS512SD	BSPP G1/4	4.33 (110)	1.89 (48)	1.93 (49)	1.93 (49)	2.17 (55)	1.26 (32)	—	.22 (5.6)	.39 (9.9)
	DX2	P2N-WS513SD	BSPP G3/8	4.88 (124)	2.21 (56)	2.21 (56)	2.21 (56)	2.44 (62)	1.57 (40)	—	0.26 (6.6)	.51 (13)
	DX3	P2N-YS514SD	BSPP G1/2	5.87 (149)	2.80 (71)	2.68 (68)	2.68 (68)	2.93 (74.5)	2.05 (52)	—	0.26 (6.6)	0.71 (18)
5599-1	DX1	PL1-1/4-70	BSPP G1/4	4.33 (110)	1.81 (46)	1.93 (49)	1.93 (49)	2.17 (55)	1.14 (29)	0.22 (5.5)	—	0.24 (6)
		PL1-1/4-80	NPT 1/4									
	DX2	PL2-3/8-70	BSPP G3/8	4.88 (124)	2.21 (56)	2.17 (55)	2.17 (55)	2.44 (62)	1.46 (37)	0.22 (5.5)	—	0.24 (6)
		PL2-3/8-80	NPT 3/8									
	DX3	PL3-1/2-70	BSPP G1/2	5.87 (149)	2.80 (71)	2.68 (68)	2.68 (68)	2.93 (74.5)	2.36 (60)	0.26 (6.6)	—	0.71 (18)
		PL3-1/2-80	NPT 1/2									

Inches (mm)

DX1
DX2

5599-1 Bottom Ported Subbase

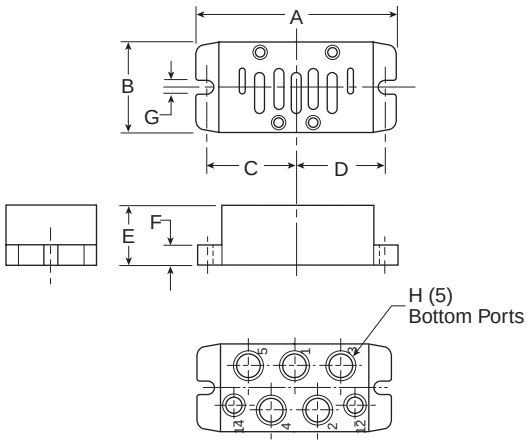

Bottom Ported Subbase

Series	Part Number	H	A	B	C	D	E	F	G
DX1	PD1-1/4-70	BSPP G1/4	4.33 (110)	1.81 (46)	1.93 (49)	1.93 (49)	1.14 (29)	.24 (6)	0.22 (5.5)
	PD1-1/4-80	NPT1/4							
DX2	PD2-3/8-70	BSPP G3/8	4.88 (124)	2.20 (56)	2.17 (55)	2.17 (55)	1.46 (37)	.24 (6)	.0.22 (5.5)
	PD2-3/8-80	NPT3/8							

Inches (mm)

Parker Hannifin Corporation
Pneumatic Division
Richland, Michigan
www.parker.com/pneumatics

DX1

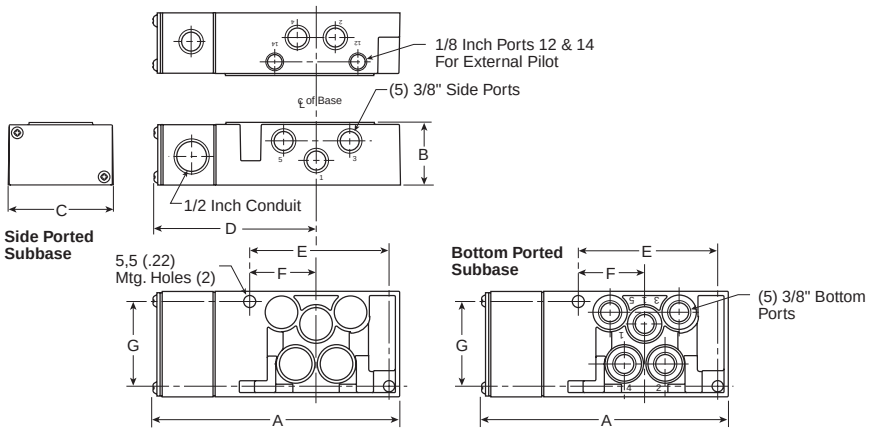

PS4011 Subbase

A	B	C	D
5.83 (148)	1.48 (38)	2.50 (64)	3.86 (98)
E	**F**	**G**	
3.29 (84)	1.57 (40)	2.00 (51)	

Inches (mm)

DX2

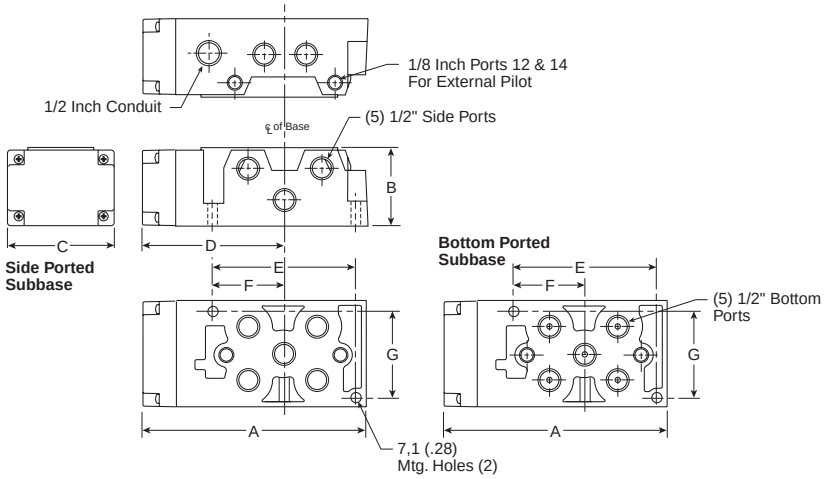

PS4111 Subbase

A	B	C	D
6.69 (170)	2.33 (59)	3.15 (80)	4.25 (108)
E	**F**	**G**	
4.21 (107)	2.07 (52)	2.56 (65)	

Inches (mm)

DX3

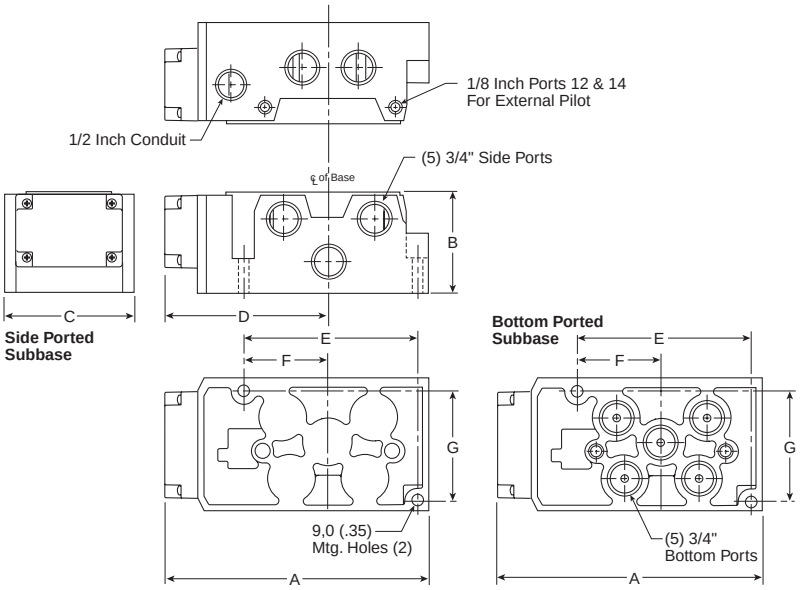

PS4211 Subbase

A	B	C	D
7.90 (201)	2.96 (75)	3.90 (990)	4.92 (125)
E	**F**	**G**	
5.14 (131)	2.50 (64)	3.24 (82)	

Inches (mm)

Parker Hannifin Corporation
Pneumatic Division
Richland, Michigan
www.parker.com/pneumatics

DX1

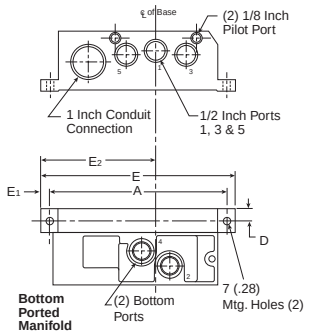

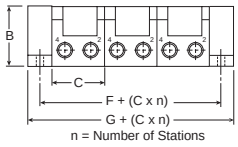

PS4011 Manifold

A	B	C	D	E
6.50 (165)	2.20 (56)	1.93 (49)	.44 (11)	7.15 (182)
E₁	**E₂**	**F**	**G**	
.33 (8)	4.25 (108)	.87 (22)	1.80 (46)	

Inches (mm)

DX2

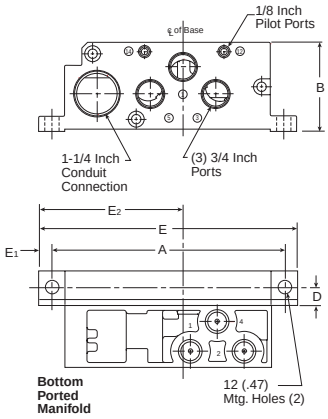

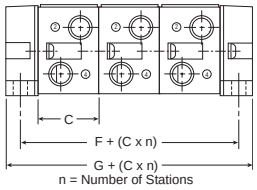

PS4111 Manifold

A	B	C	D	E
8.46 (215)	3.35 (85)	2.20 (56)	.59 (15)	9.41 (239)
E₁	**E₂**	**F**	**G**	
.47 (12)	5.28 (134)	1.18 (30)	2.36 (60)	

Inches (mm)

DX3

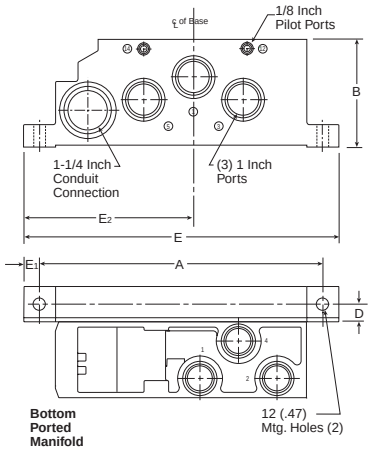

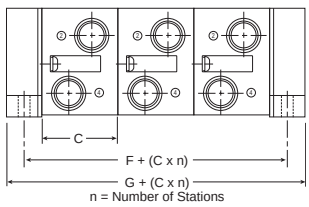

PS4211 Manifold

A	B	C	D	E
10.41 (265)	4.13 (105)	2.80 (71)	.65 (175)	11.61 (295)
E₁	**E₂**	**F**	**G**	
.59 (15)	6.26 (159)	1.30 (33)	2.60 (63)	

Inches (mm)

Parker Hannifin Corporation
Pneumatic Division
Richland, Michigan
www.parker.com/pneumatics

DX1
DX2
DX3

5599-1 VDMA – Form C Manifold
&
5599-1 VDMA - Form D End Plates

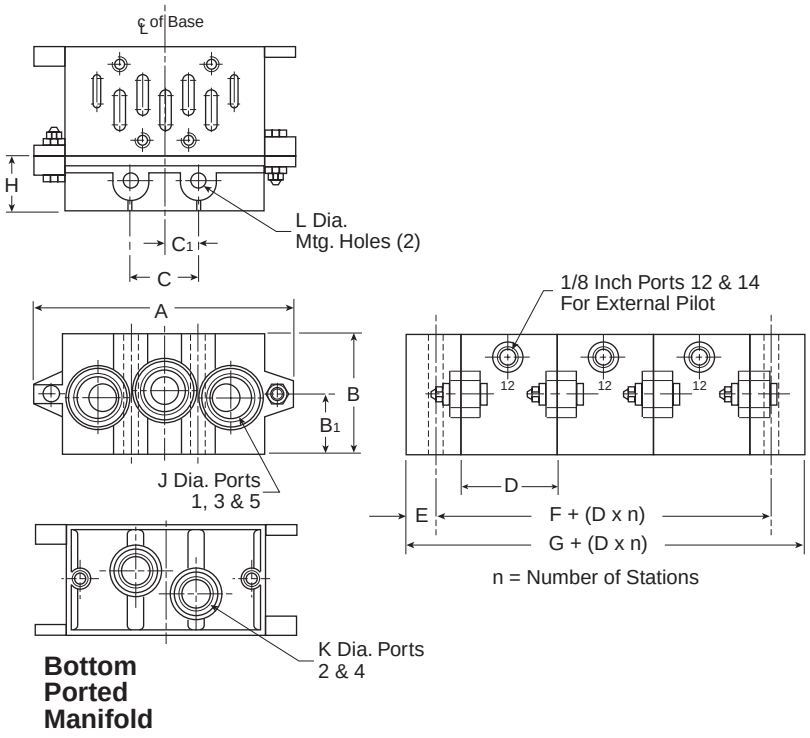

Bottom Ported Manifold

VDMA Form C Manifold

Series	Part Number	A	B	B_1	D	E	F	G	J	K
DX1	P2N-VM512MB	4.33 (110)	1.81 (46)	0.94 (24)	1.69 (55)	0.43 (22)	0.87 (22)	1.73 (44)	BSPP G3/8	BSPP G1/4
DX2	P2N-WM513MB	5.31 (135)	1.85 (47)	0.94 (24)	2.20 (56)	0.51 (13)	1.02 (26)	2.05 (52)	BSPP G1/2	BSPP G3/8
DX3	P2N-YM514MB	7.48 (190)	2.20 (56)	1.34 (34)	2.80 (71)	0.59 (15)	1.18 (30)	2.36 (60)	BSPP G1/2	BSPP G1/2

VDMA Form D End Plate

Series	Part Number	A	B	B_1	C	C_1	H	L
DX1	P2N-VM513ES	4.33 (110)	1.81 (46)	0.94 (24)	1.10 (28)	0.55 (14)	0.87 (22)	0.28 (7)
DX2	P2N-WM514ES	5.31 (135)	1.85 (47)	0.94 (24)	1.38 (35)	0.69 (18)	1.02 (26)	0.34 (9)
DX3	P2N-YM518ES	7.48 (190)	2.20 (56)	1.34 (34)	2.05 (52)	1.03 (26)	1.18 (30)	0.47 (12)

Inches (mm)

Parker Hannifin Corporation
Pneumatic Division
Richland, Michigan
www.parker.com/pneumatics