Fieldbus Systems

Section E

www.parker.com/pneu/Isysnet

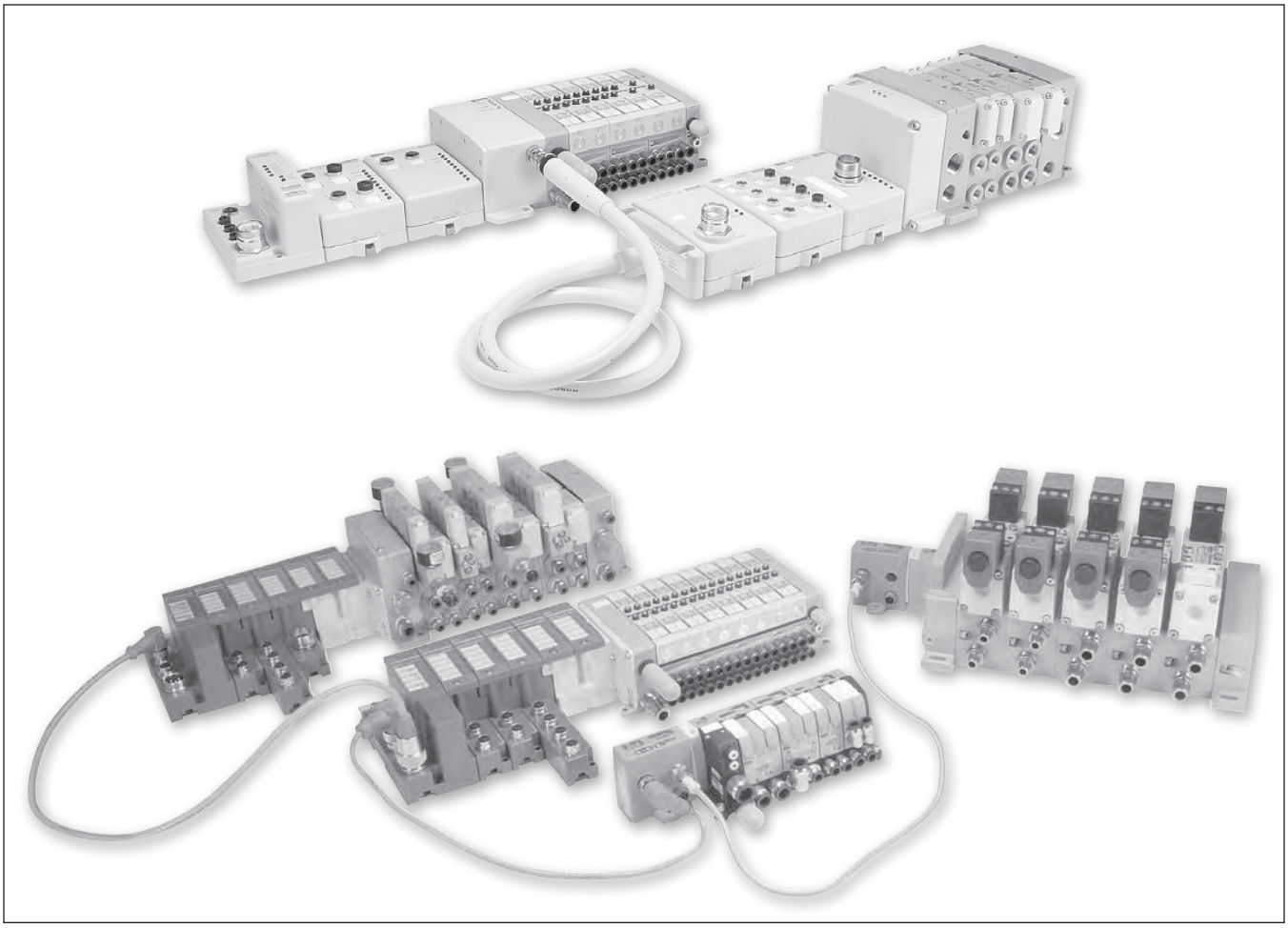

Overview & Protocol Recommendations..... E104-E105

Introduction to Control Systems..... E106-E115

Moduflex Fieldbus System E116-E124

Isysnet Fieldbus System E125-E146

Turck Fieldbus System E147-E175

Cables & Cordsets E176-E179

Dimensions

Isysnet..... E180-E181

Turck..... E182-E183

Moduflex..... E183-E184

Parker Hannifin Corporation
Pneumatic Division
Richland, Michigan
www.parker.com/pneumatics

www.comoso.com

	Fieldbus Offering		
Valve Series	**Moduflex**	**Isysnet**	**Turck**
Moduflex	X		
Isys Micro	X	X	X
Isys ISO	X	X	X

	Fieldbus Offering		
Protocol	**Moduflex**	**Isysnet**	**Turck**
DeviceNet	X	X	X
Ethernet/IP		X	X
Profibus-DP	X	X	X
Profinet			X
Modbus/TCP			X
AS-i	X		
CANopen	X		X
Interbus-S	X		
ControlNet		X	

	Fieldbus Offering		
Options	**Moduflex**	**Isysnet**	**Turck**
Digital inputs / outputs*		X	X
Analog inputs / outputs		X	X
16 Solenoid control*	X		X
32 Solenoid control		X	X
Short circuit protection on inputs			X
Current sensing outputs			X
Bus expansion		X	
DeviceNet subnet			X
Programmable comm modules			X
Power over DeviceNet / CANopen			X
Preferred Connectivity		X	
CANopen Expansion			X

* Modulfex AS-i modules are available with 6 or 8 inputs and 6 or 8 solenoid outputs

	Turck Fieldbus	Isysnet	Moduflex
Solenoid Control	Up to 32 solenoids on main valve manifold Devicenet Subnet Allows an additional 32 solenoids per node 63 nodes maximum CANopen expansion Allows an additional 64 solenoids per expansion 5 expansions maximum	Up to 32 solenoids on main valve manifold Isys Micro Bus Expansion Allows an additional 32 solenoids per expansion 3 expansions maximum 1 meter fixed cable length per expansion	Up to 16 solenoids on main valve manifold
I/O Capabilities	256 maximum inputs and outputs directly connected to communication module Devicenet Subnet Allows an additional 256 I/O per node 63 nodes maximum Third party DeviceNet modules can be used CANopen expansion Allows an additional 64 I/O per expansion 5 expansions maximum Third party CANopen modules can be used	Maximum of 256 inputs and 256 outputs directly connected to the communication module, including Isys Micro Bus Expansion	8 Inputs available on AS-i communication only.
Short Circuit Protection	SXG and diagnostic electronic modules have each point isolated All other electronic modules are isolated from the backplane	Devices must be fused between input / output and electronic module.	

Parker Hannifin Corporation
Pneumatic Division
Richland, Michigan
www.parker.com/pneumatics

www.comoso.com

PLC to Fieldbus Protocol Recommendations

Introduction

		Moduflex					Isysnet				Turck Fieldbus					
		AS-i	CANopen	DeviceNet	Interbus	Profibus	ControlNet	DeviceNet	EtherNet	Profibus	CANopen	DeviceNet	Ethernet/IP	Modbus/TCP	Profibus	Profinet
Rockwell Automation	PLC-5™			X								X				
	SLC 500™			X								X	X			
	1756 Logix™			X								X	X			
	1769-L32C, -35CR			X			X	X	X			X	X			
	1769 CompactLogix™			X			X	X	X			X	X			
	SoftLogix5800™			X			X	X	X			X	X			
	FlexLogic™			X			X	X	X			X	X			
	1789 ControlLogix™			X			X	X	X			X	X			
Siemens	SIMATIC S7-200	X				X				X					X	
	SIMATIC S7-300	X				X				X					X	
	SIMATIC S7-400					X				X					X	X
	SIMATIC S7-1200					X				X					X	X
Omron	SYSMAC One			X								X				
	SYSMAC CJ1			X								X				
	SYSMAC CJ2			X								X				
	SYSMAC CP1			X								X				
	SYSMAC CS1			X								X				
	SYSMAC CQM1H			X								X				
	SYSMAC Alpha			X								X				
	SYSMAC CVM1/CV			X								X				
	SYSMAC CPM			X								X				
Schneider	Modicon Premium		X		X	X				X	X		X	X	X	
	Quantum	X			X								X	X		
	M340™	X	X								X		X	X		
	Momentum™												X	X		
Automation Direct	Productivity 3000			X								X				
	DirectLogic 05			X								X				
	DirectLogic 06			X								X				
	DirectLogic 105			X								X				
	DirectLogic 205			X								X	X	X		
	DirectLogic 305			X								X	X	X		
	DirectLogic 405			X								X	X	X		

Note: Above information believed correct at the time of printing. Confirm manufacturers specifications to ensure product compatibility.

Parker Hannifin Corporation
Pneumatic Division
Richland, Michigan
www.parker.com/pneumatics

www.comoso.com

Basic Systems

- Up to 24 solenoids per manifold
- Discretely wired solenoids - Optimized for PLCs with onboard Inputs and Outputs
- 25-Pin D-Sub, 19-Pin Brad Harrison or M23, or 12-Pin M23 connectors available.

Centralized Application

Valves Inside Control Cabinet

- Valves located near machine control
- Applications with caustic wash down, hazardous areas, or extreme temperatures

Advantages

- Highest degree of environmental protection
- One location for all control devices
- Small size requires minimal cabinet space
- Eliminates junction boxes required for valves
- Eliminates conduit runs for valves

Decentralized Application

valves Outside Control Cabinet

- Valves located near application - Ready for machine mounting
- IP65 rating suitable for dusty and wet environments

Advantages

- Reduces control cabinet size
- Reduces tubing length and improves pneumatic response time
- Eliminates pneumatic bulk fittings on control cabinet

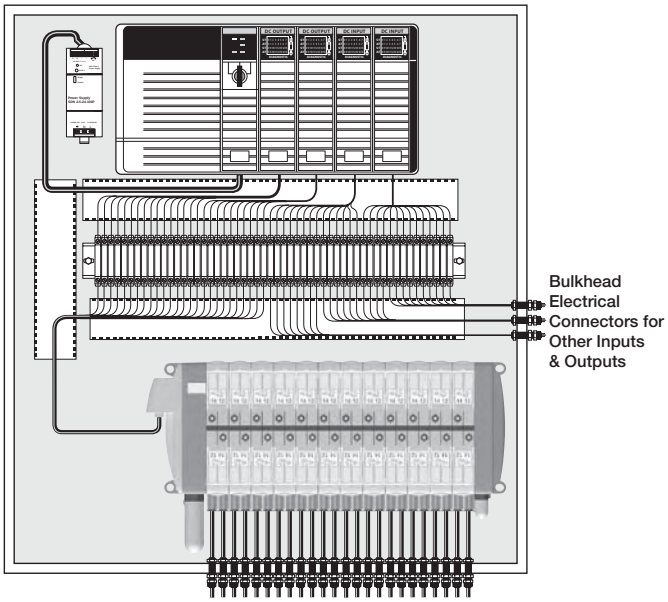

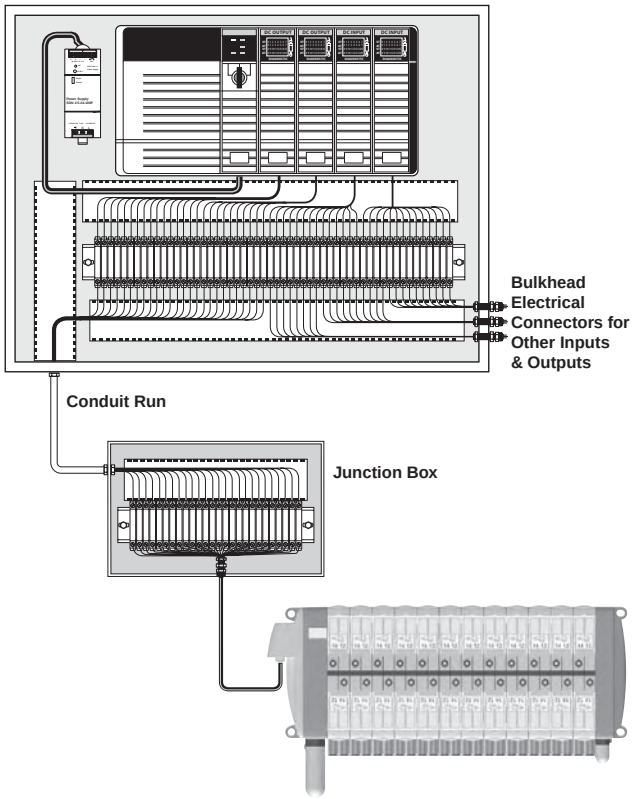

Parker Hannifin Corporation
Pneumatic Division
Richland, Michigan
www.parker.com/pneumatics

Basic Systems: Moduflex Fieldbus

- Up to 16 solenoids per manifold
- Fieldbus equipped manifolds – optimized for PLCs with fieldbus capability
- Routinely used on medium sized machines
- Connectivity to Moduflex, Isys Micro and Isys ISO valves.

Centralized Application

Valves Inside Control Cabinet

- Valves located near machine control
- Applications with caustic wash down, hazardous areas, or extreme temperatures
- Additional inputs and outputs are not directly attached to valve manifold

Advantages

- Highest degree of environmental protection
- One location for all control devices
- Small size requires minimal cabinet space
- Eliminates terminal strips and wire ways for valves
- Greatly reduces wiring time
- Eliminates junction boxes for valves
- Eliminates conduit runs for valves

Decentralized Application

Isys Micro Outside Control Cabinet

- Valves located near application - Ready for machine mounting
- IP65 rating suitable for dusty and wet environments
- Additional inputs and outputs are not directly attached to valve manifold

Advantages

- Smallest control cabinet
- Reduces tubing length and improves pneumatic response time
- Eliminates pneumatic bulk fittings on control cabinet
- Many fieldbus nodes can be attached to the network with little incremental cost – valve manifolds, inputs, outputs and other devices.
- Eliminates terminal strips and wire ways for valves
- Greatly reduces wiring time
- Eliminates junction boxes for valves
- Eliminates conduit runs for valves

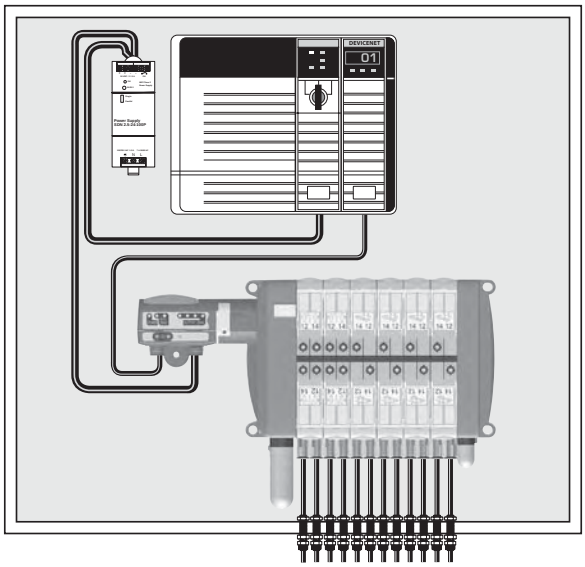

Bulkhead Pneumatic Fittings

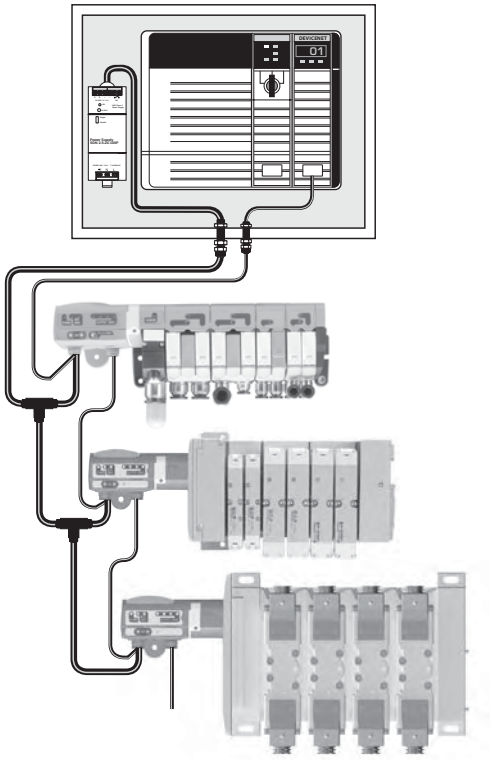

Parker Hannifin Corporation
Pneumatic Division
Richland, Michigan
www.parker.com/pneumatics

Complete Fieldbus Systems: Isysnet Fieldbus System

- Up to 32 Solenoids per Manifold
- With Isys Micro Bus Extension Functionality, 4 Manifolds with up to 32 Solenoids each can be connected on the same Node
- Add Inputs and Outputs to the Isysnet Network
- Fieldbus equipped Manifolds – optimized for PLC's with Fieldbus capability
- Connectivity to Isys Micro and Isys ISO valves

Centralized Application

Valves Inside Control Cabinet

- Isysnet Fieldbus System with Inputs and Outputs
- Valves located near machine control
- Applications with caustic wash down, hazardous areas, or extreme temperatures
- Additional inputs and outputs are directly attached to valve manifold

Advantages

- Handle All I/O from One Node
- Eliminate PLC Input / Output Cards
- Up to 128 Solenoids per Node with Bus Extension Cables
- Up to 256 Inputs and 256 Outputs per Isysnet Node
- Analog Inputs / Outputs available
- Highest degree of environmental protection
- One location for all control devices
- Eliminates terminal strips and wire ways
- Greatly reduces wiring time

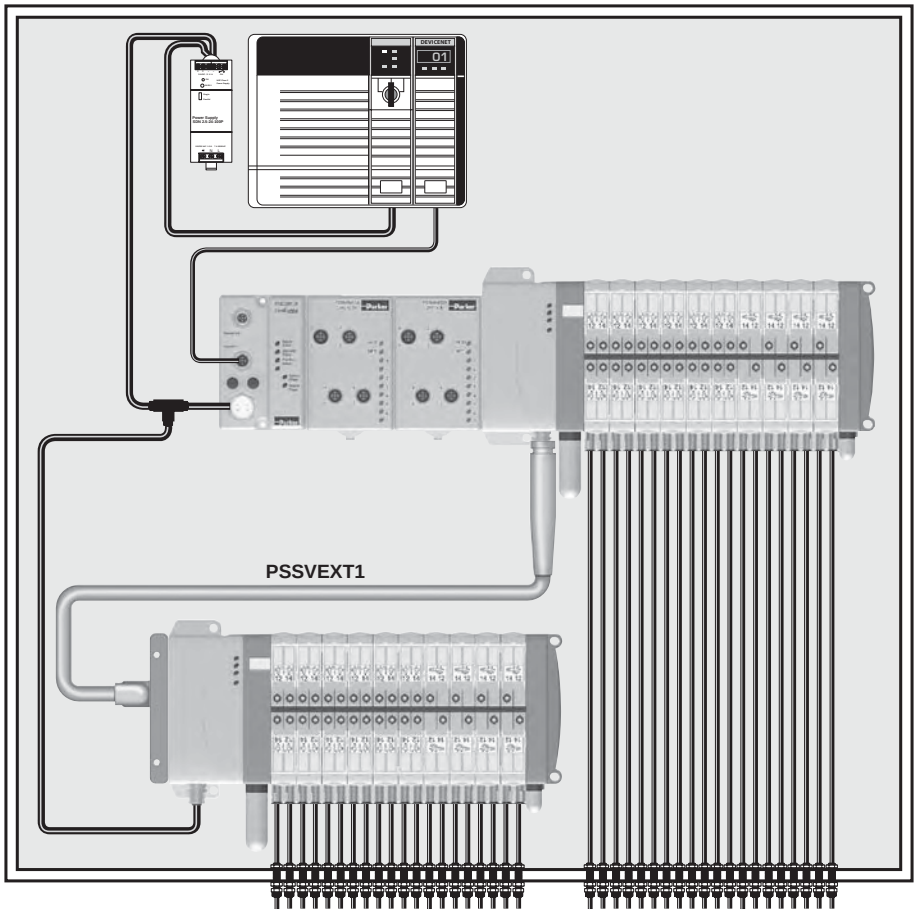

Bulkhead Pneumatic Fittings

Parker Hannifin Corporation
Pneumatic Division
Richland, Michigan
www.parker.com/pneumatics

Complete Fieldbus Systems: Isysnet Fieldbus System

- Up to 32 Solenoids per Manifold
- With Isys Micro Bus Extension Functionality, 4 Manifolds with up to 32 Solenoids each can be connected on the same Node
- Add Inputs and Outputs to the Isysnet Network
- Fieldbus equipped Manifolds – optimized for PLC's with Fieldbus capability
- Connectivity to Isys Micro and Isys ISO valves

Decentralized Application

Valves Outside Control Cabinet

- Isysnet Fieldbus System with Inputs and Outputs
- Valves located near application - Ready for machine mounting
- IP65 rating suitable for dusty and wet environments
- Additional inputs and outputs are directly attached to valve manifold

DeviceNet™ EtherNet/IP™ ControlNet™ PROFIBUS PROCESS FIELD BUS

Advantages

- Handle All I/O from One Node
- Eliminate PLC Input / Output Cards
- Up to 128 Solenoids per Node with Bus Extension Cables
- Up to 256 Inputs and 256 Outputs per Isysnet Nodes
- Analog Inputs / Outputs available
- Smallest control cabinet
- Reduces tubing length and improves pneumatic response time
- Eliminates pneumatic bulk fittings on control cabinet
- Many fieldbus nodes can be attached to the network with little incremental cost – valve manifolds, inputs, outputs and other devices.
- Eliminates terminal strips and wire ways
- Greatly reduces wiring time
- Eliminates junction boxes for all inputs and outputs
- Eliminates conduit runs for all inputs and outputs

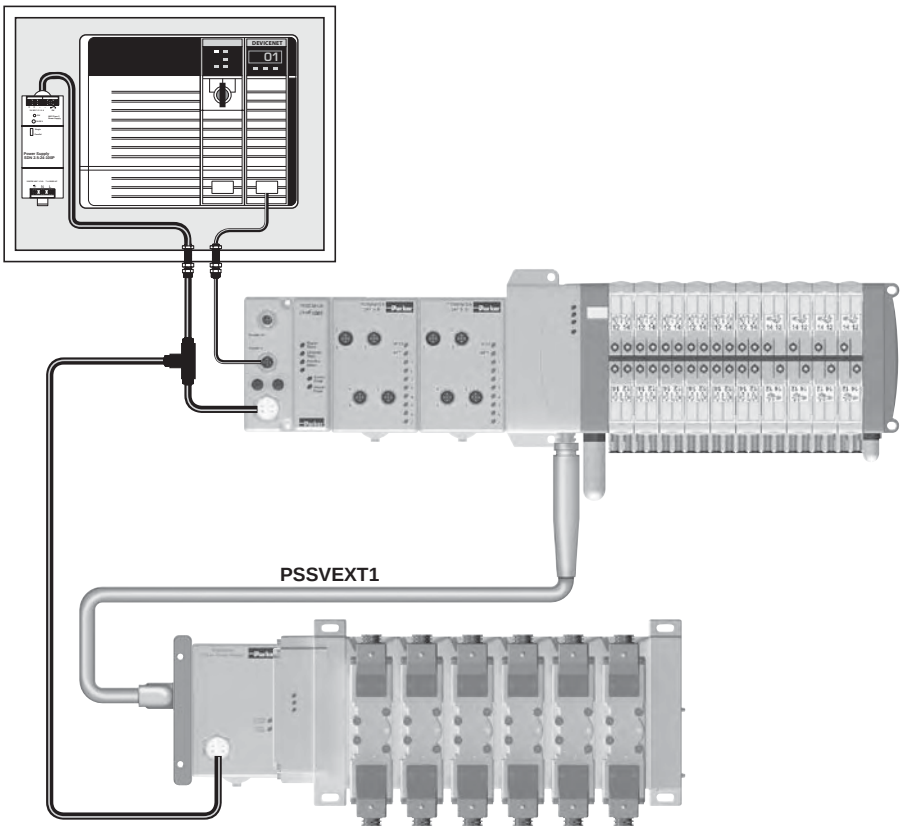

Parker Hannifin Corporation
Pneumatic Division
Richland, Michigan
www.parker.com/pneumatics

Complete Fieldbus Systems: Turck Fieldbus System

General Product Features

- Turck Fieldbus System with up to 256 inputs / outputs and 32 Solenoids per manifold
- Digital inputs / outputs, analog inputs / outputs, serial interface, counter modules, and RFID modules available
- Connectivity to Isys Micro and Isys ISO valves system

Advantages

- Handle all I/O from one node; eliminate PLC input / output cards
- Fieldbus equipped manifolds – optimized for PLC's with fieldbus capability
- Eliminates junction boxes, terminal strips, and conduit runs for all inputs and outputs, greatly reducing wiring time

Centralized Application

Valves Inside Control Cabinet

- Valves located near machine control
- Applications with caustic wash down, hazardous areas, or extreme temperatures

Advantages

- Highest degree of environmental protection
- One location for all control devices
- Small size requires minimal cabinet space

Decentralized Application

Valves Outside Control Cabinet

- Valves located near application - ready for machine mounting
- IP65 rating suitable for dusty and wet environments

Advantages

- Smallest control cabinet
- Reduces tubing length and improves response time
- Eliminates pneumatic bulk fittings on control cabinet

DeviceNet™ EtherNet/IP™ PROFIBUS PROCESS FIELD BUS PROFINET INDUSTRIAL ETHERNET Modbus/TCP™ CANopen

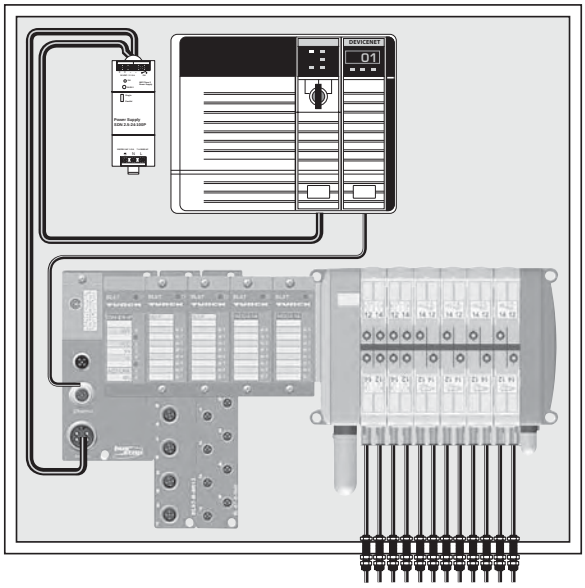

Bulkhead Pneumatic Fittings

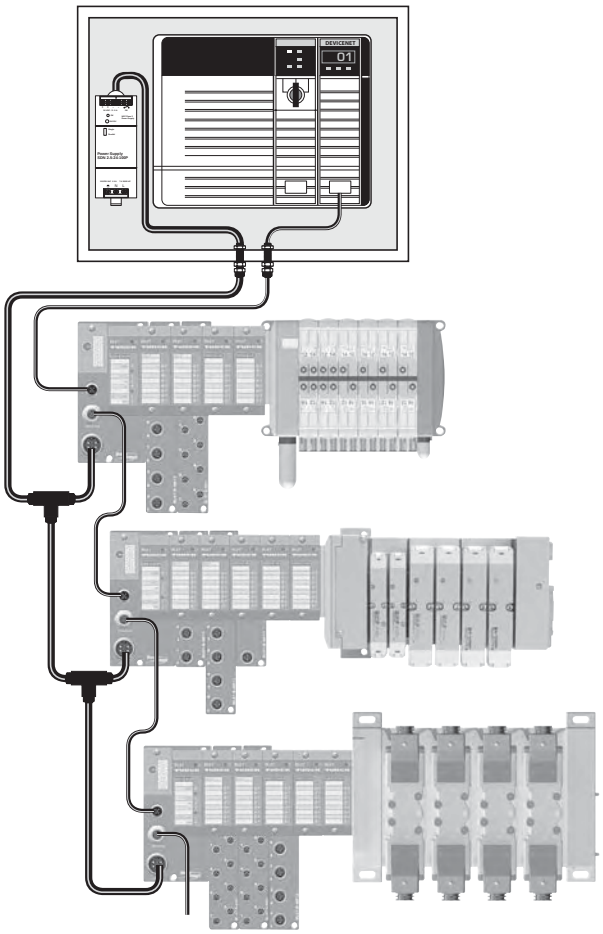

Parker Hannifin Corporation
Pneumatic Division
Richland, Michigan
www.parker.com/pneumatics

Complete Fieldbus Systems: Turck Fieldbus System with CANopen Expansion

General Product Features

- Turck Fieldbus System with up to 256 inputs / outputs and 32 Solenoids per manifold
- Digital inputs / outputs, analog inputs / outputs, serial interface, counter modules, and RFID modules available
- Connectivity to Isys Micro and Isys ISO valves

CANopen Expansion Features

- Using a CANopen Interface module, a CANopen subnet is created within the BL67 network, controlling an additional 64 inputs, outputs, or solenoids.
- The CANopen subnet is independent of the main fieldbus network, and is not visible to the master PLC.
- Additional Moduflex CANopen modules can be attached to the CANopen subnet to provide a connection for 16 solenoids each.
- Other 3rd party CANopen devices can also be used on this network, within the 64 bit CANopen Expansion limit.

System Advantages

- Handle all I/O from one node; eliminate PLC input / output cards
- Fieldbus equipped manifolds – optimized for PLC's with fieldbus capability
- Several CANopen fieldbus nodes can be attached to the network – valve manifolds, inputs, outputs or other devices
- CANopen expansion allows additional devices to be attached to the system without a CANopen scanner card
- Eliminates junction boxes, terminal strips, and conduit runs for all inputs and outputs, greatly reducing wiring time

Centralized Application

Valves Inside Control Cabinet

- Valves located near machine control
- Applications with caustic wash down, hazardous areas, or extreme temperatures

Advantages

- Highest degree of environmental protection
- One location for all control devices
- Small size requires minimal cabinet space

DeviceNet™ PROFIBUS EtherNet/IP™ PROFINET Modbus/TCP™ CANopen

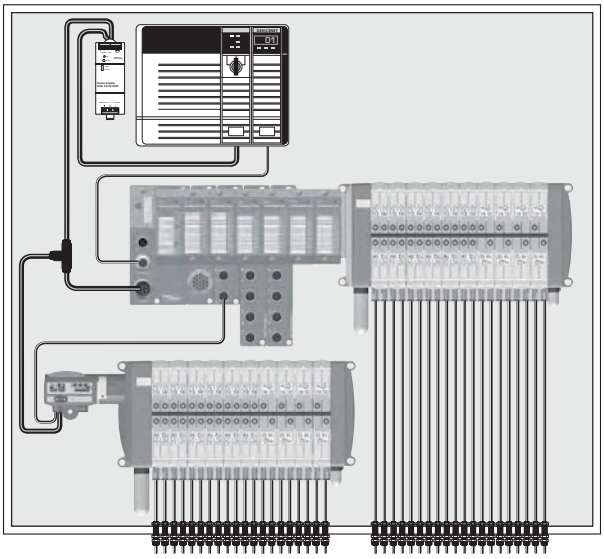

Bulkhead Pneumatic Fittings

Decentralized Application

Valves Outside Control Cabinet

- Valves located near application - ready for machine mounting
- IP65 rating suitable for dusty and wet environments

Advantages

- Smallest control cabinet
- Reduces tubing length and improves response time
- Eliminates pneumatic bulk fittings on control cabinet

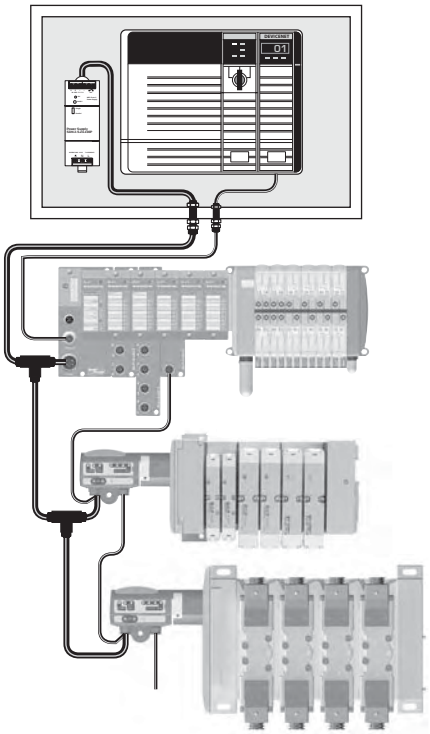

Parker Hannifin Corporation
Pneumatic Division
Richland, Michigan
www.parker.com/pneumatics

Complete Fieldbus Systems: Turck Fieldbus System with BL Remote DeviceNet Subnet

General Product Features

- Turck Fieldbus System with up to 256 inputs / outputs and 32 Solenoids per manifold
- Digital inputs / outputs, analog inputs / outputs, serial interface, counter modules, and RFID modules available
- Connectivity to Isys Micro and Isys ISO valves

BL Remote DeviceNet Subnet Features

- With BL Remote DeviceNet Subnet functionality, each communication module has its own DeviceNet master which provides a connection for 63 DeviceNet nodes with additional inputs, outputs, and solenoid control
- BL Remote DeviceNet Subnet is independent of the main fieldbus network, and is not visible to the master PLC
- Moduflex DeviceNet modules can be attached to the subnet to provide a connection for 16 solenoids each
- Turck DeviceNet modules can be attached to the subnet to provide a connection for 16 or 32 solenoids each and inputs and outputs up to the 256 input and output limitation

System Advantages

- Handle all I/O from one node; eliminate PLC input / output cards
- Fieldbus equipped manifolds – optimized for PLC's with fieldbus capability
- Many DeviceNet nodes can be attached to the network – valve manifolds, inputs, outputs or other devices
- Eliminates junction boxes, terminal strips, and conduit runs for all inputs and outputs, greatly reducing wiring time

Centralized Application

Valves Inside Control Cabinet

- Valves located near machine control
- Applications with caustic wash down, hazardous areas, or extreme temperatures

Advantages

- Highest degree of environmental protection
- One location for all control devices
- Small size requires minimal cabinet space

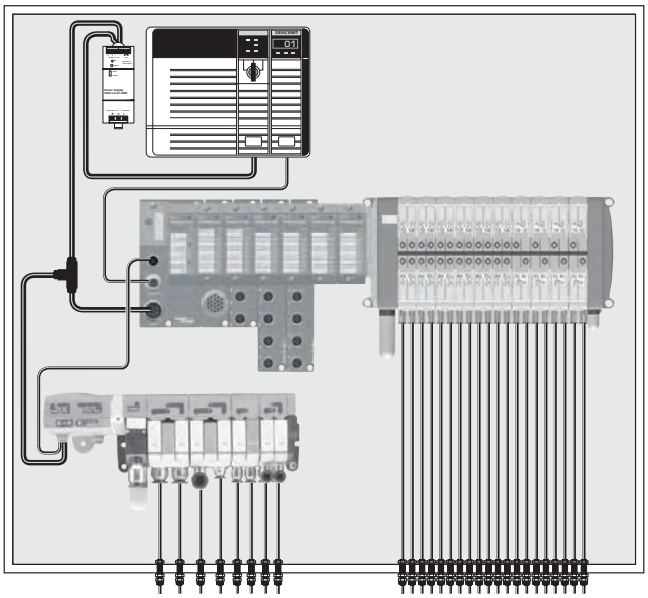

Bulkhead Pneumatic Fittings

Decentralized Application

Valves Outside Control Cabinet

- Valves located near application, ready for machine mounting
- IP65 rating suitable for dusty and wet environments

Advantages

- Smallest control cabinet
- Reduces tubing length and improves response time
- Eliminates pneumatic bulk fittings on control cabinet

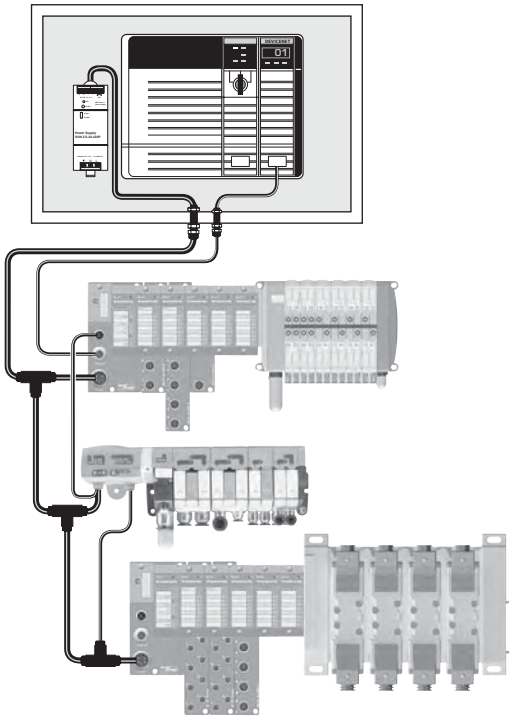

Parker Hannifin Corporation
Pneumatic Division
Richland, Michigan
www.parker.com/pneumatics

Complete Fieldbus Systems: Turck Fieldbus System with Stand alone Control

General Product Features

- Turck Fieldbus System with up to 256 inputs / outputs and 32 Solenoids per manifold
- Digital inputs / outputs, analog inputs / outputs, serial interface, counter modules, and RFID modules available
- Connectivity to Isys Micro and Isys ISO valves

Stand Alone Control Features

- Communication modules equipped with standalone control – programmed according to IEC61131-3 with CoDeSys
- 512KB Program memory with 32 bit RISC processor
- Run 1000 instructions in less than 1 ms
- Fieldbus equipped manifolds – optimized for PLC's with fieldbus capability or standalone controllers that need to interface with other devices

System Advantages

- Handle all I/O and control with one system; eliminate the PLC when used as the main controller for smaller machines
- Reduces programming and bandwith requirements on large machines with a master PLC controller by handling local I/O and interfacing with the PLC over the fieldbus network
- Fieldbus equipped manifolds provide connectivity to other fieldbus devices
- Eliminates junction boxes, terminal strips, and conduit runs for all inputs and outputs, greatly reducing wiring time

Centralized Application Valves

Inside Control Cabinet

- Valves attached to the machine control
- Applications with caustic wash down, hazardous areas, or extreme temperatures

Advantages

- Highest degree of environmental protection
- One location for all control devices

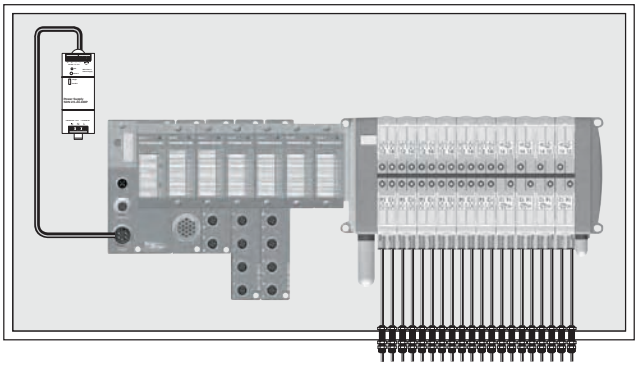

Bulkhead Pneumatic Fittings

Decentralized Application

Valves Outside Control Cabinet

- Valves and machine control located near application, ready for machine mounting
- IP65 rating suitable for dusty and wet environments

Advantages

- No control cabinet needed when used as the main controller
- Reduces tubing length and improves response time
- Eliminates pneumatic bulk fittings on control cabinet

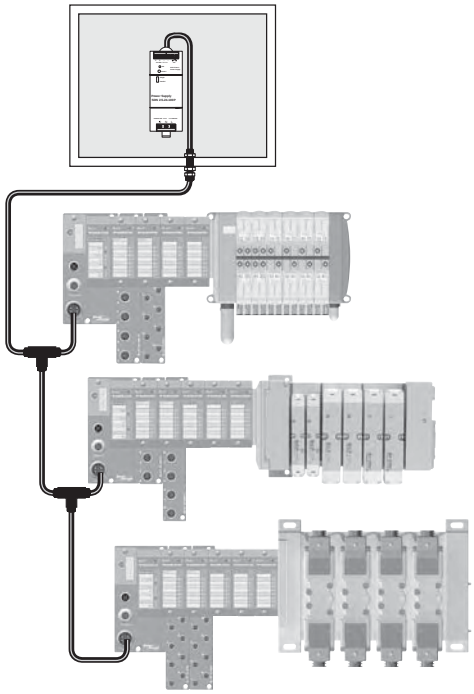

Parker Hannifin Corporation
Pneumatic Division
Richland, Michigan
www.parker.com/pneumatics

Complete Fieldbus Systems: Turck Fieldbus System with Stand Alone Control and BL Remote DeviceNet Subnet

General Product Features

- Turck Fieldbus System with up to 256 inputs / outputs and 32 Solenoids per manifold
- Digital inputs / outputs, analog inputs / outputs, serial interface, counter modules, and RFID modules available
- Connectivity to Isys Micro and Isys ISO valves

Stand Alone Control Features

- Communication modules equipped with standalone control – programmed according to IEC61131-3 with CoDeSys
- 512KB Program memory with 32 bit RISC processor
- Run 1000 instructions in less than 1 ms

BL Remote DeviceNet Subnet Features

- With BL Remote DeviceNet Subnet functionality, each communication module has its own DeviceNet master which provides a connection for 63 DeviceNet nodes with additional inputs, outputs, and solenoid control
- BL Remote DeviceNet Subnet is independent of the main fieldbus network, and is not visible to the master PLC
- Moduflex DeviceNet modules can be attached to the subnet to provide a connection for 16 solenoids each
- Turck DeviceNet modules can be attached to the subnet to provide a connection for 16 or 32 solenoids each and inputs and outputs up to the 256 input and output limitation

System Advantages

- Handle all I/O and control with one system; eliminate the PLC when used as the main controller for smaller machines
- Reduces programming and bandwith requirements on large machines with a master PLC controller by handling local I/O and interfacing with the PLC over the fieldbus network
- Fieldbus equipped manifolds provide connectivity to other fieldbus devices
- Many DeviceNet nodes can be attached to the network – valve manifolds, inputs, outputs or other devices
- Eliminates junction boxes, terminal strips, and conduit runs for all inputs and outputs, greatly reducing wiring time

Centralized Application

Valves Inside Control Cabinet

- Valves attached to the machine control
- Applications with caustic wash down, hazardous areas, or extreme temperatures

Advantages

- Highest degree of environmental protection
- One location for all control devices
- Small size requires minimal cabinet space

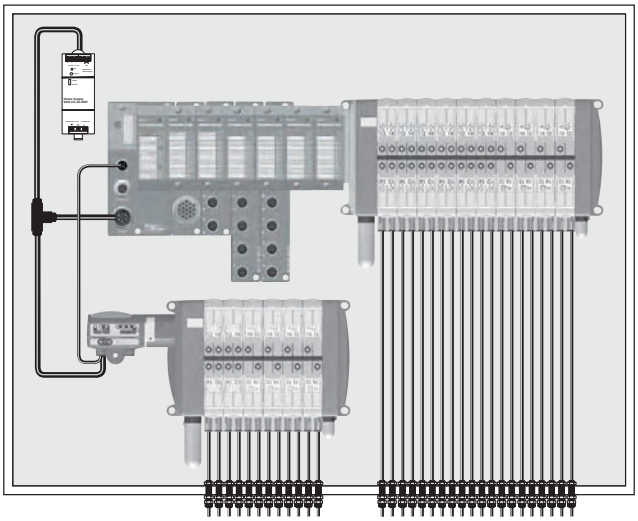

Bulkhead Pneumatic Fittings

Decentralized Application

Valves Outside Control Cabinet

- Valves and machine control located near application - ready for machine mounting
- IP65 rating suitable for dusty and wet environments

Advantages

- No control cabinet needed when used as the main controller
- Reduces tubing length and improves pneumatic response time
- Eliminates pneumatic bulk fittings on control cabinet

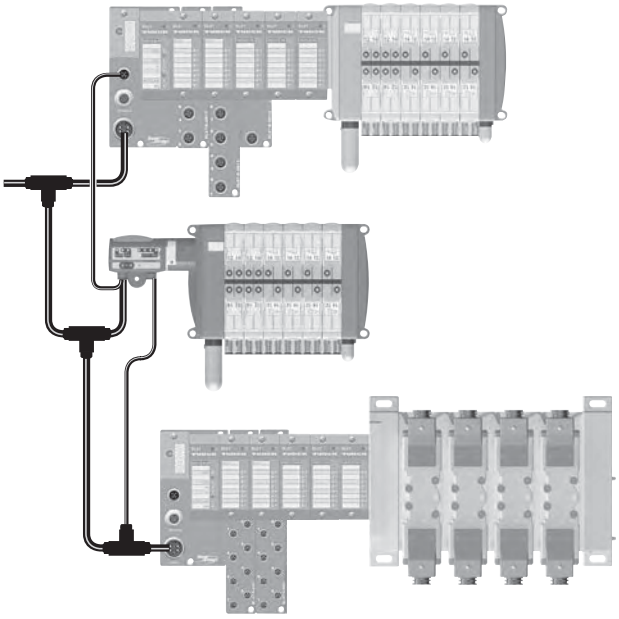

Parker Hannifin Corporation
Pneumatic Division
Richland, Michigan
www.parker.com/pneumatics

Complete Fieldbus Systems: Turck Fieldbus System with Stand Alone Control, BL Remote DeviceNet Subnet, and CANopen Expansion

General Product Features

- Turck Fieldbus System with up to 256 inputs / outputs and 32 Solenoids per manifold
- Digital inputs / outputs, analog inputs / outputs, serial interface, counter modules, and RFID modules available
- Connectivity to Isys Micro and Isys ISO valves

Stand Alone Control Features

- Communication modules equipped with standalone control – programmed according to IEC61131-3 with CoDeSys
- 512KB Program memory with 32 bit RISC processor
- Run 1000 instructions in less than 1 ms

BL Remote DeviceNet Subnet Features

- Each communication module has its own DeviceNet master which provides a connection for 63 DeviceNet nodes with additional inputs, outputs, and solenoid control
- BL Remote DeviceNet Subnet is independent of the main fieldbus network, and is not visible to the master PLC
- Moduflex DeviceNet modules can be attached to the subnet to provide a connection for 16 solenoids each
- Turck DeviceNet modules can be attached to the subnet to provide a connection for 16 or 32 solenoids each and inputs and outputs up to the 256 input and output limitation

CANopen Expansion Features

- Using a CANopen Interface module, a CANopen subnet is created within the BL67 network, controlling an additional 64 inputs, outputs, or solenoids
- The CANopen subnet is independent of the main fieldbus network, and is not visible to the master PLC
- Additional Moduflex CANopen modules can be attached to the CANopen subnet to provide a connection for 16 solenoids each
- Other 3rd party CANopen devices can also be used on this network, within the 64 bit CANopen Expansion limit

System Advantages

- Handle all I/O and control with one system; eliminate the PLC when used as the main controller for smaller machines
- Reduces programming and bandwith requirements on large machines with a master PLC controller by handling local I/O and interfacing with the PLC over the fieldbus network
- Fieldbus equipped manifolds provide connectivity to other fieldbus devices
- Many DeviceNet nodes can be attached to the network – valve manifolds, inputs, outputs or other devices
- Several CANopen nodes can be attached to the network – valve manifolds, inputs, outputs or other devices
- CANopen expansion allows additional devices to be attached to the system without a CANopen scanner card
- Eliminates junction boxes, terminal strips, and conduit runs for all inputs and outputs, greatly reducing wiring time

Centralized Application

Valves Inside Control Cabinet

- Valves attached to the machine control
- Applications with caustic wash down, hazardous areas, or extreme temperatures

Advantages

- Highest degree of environmental protection
- One location for all control devices
- Small size requires minimal cabinet space

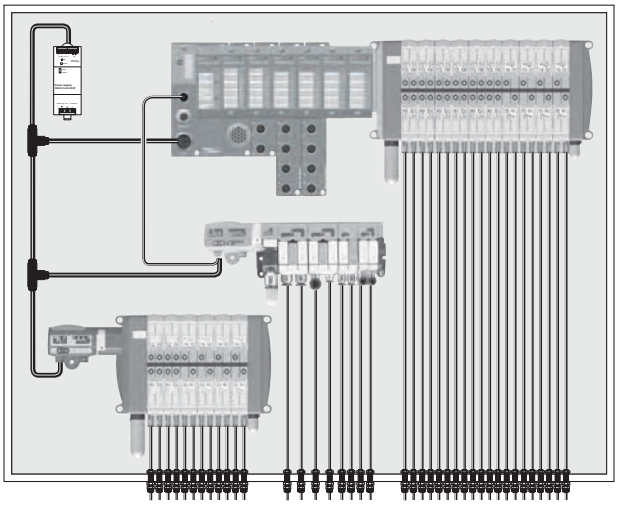

Bulkhead Pneumatic Fittings

Decentralized Application

Valves Outside Control Cabinet

- Valves and machine control located near application - ready for machine mounting
- IP65 rating suitable for dusty and wet environments

Advantages

- No control cabinet needed when used as the main controller
- Reduces tubing length and improves pneumatic response time
- Eliminates pneumatic bulk fittings on control cabinet

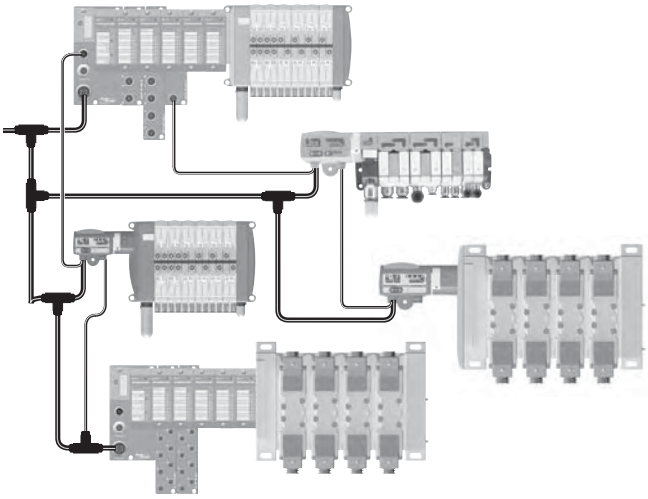

Parker Hannifin Corporation
Pneumatic Division
Richland, Michigan
www.parker.com/pneumatics

The Moduflex Fieldbus System

Moduflex communication modules directly attach to the end plate. It offers a compact and low cost fieldbus solution.

Moduflex Features

- Small, compact product design
- Broad protocol offering, including DeviceNet, Profibus, AS-i, CANopen, and Interbus
- Channel-level diagnostics (LED and Electronic)
- Inputs available with AS-i modules
- Horizontal and vertical mounting without derating
- 5g vibration
- Quick-disconnects for I/O and network connectivity
- Built-in panel grounding
- CE certification

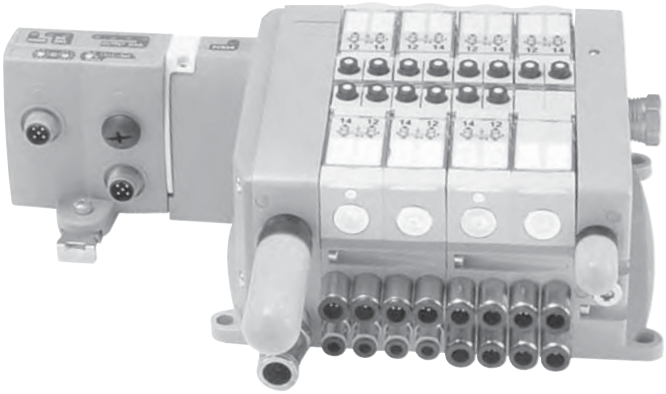

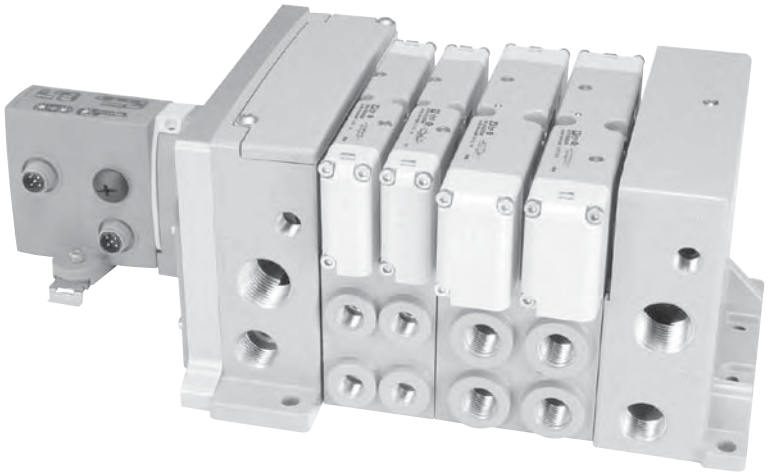

Parker Hannifin Corporation
Pneumatic Division
Richland, Michigan
www.parker.com/pneumatics

www.comoso.com

Communication Modules

DeviceNet™

CANopen

PROFIBUS PROCESS FIELD BUS

INTERBUS-S

M12 (Male) Power Supply Connector

1 - 24VDC Module (Not Connected for DeviceNet and CANopen)
2 - Not Connected
3 - 0VDC Module and Solenoid
4 - 24VDC Solenoid
5 - Protected Earth (PE)

Profibus DP / DeviceNet / CANopen / InterBus-S

24VDC
(As Seen On Module)

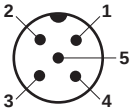

M12 Male
Type A

Control for up to 16 solenoids

P2M2HBVP11600

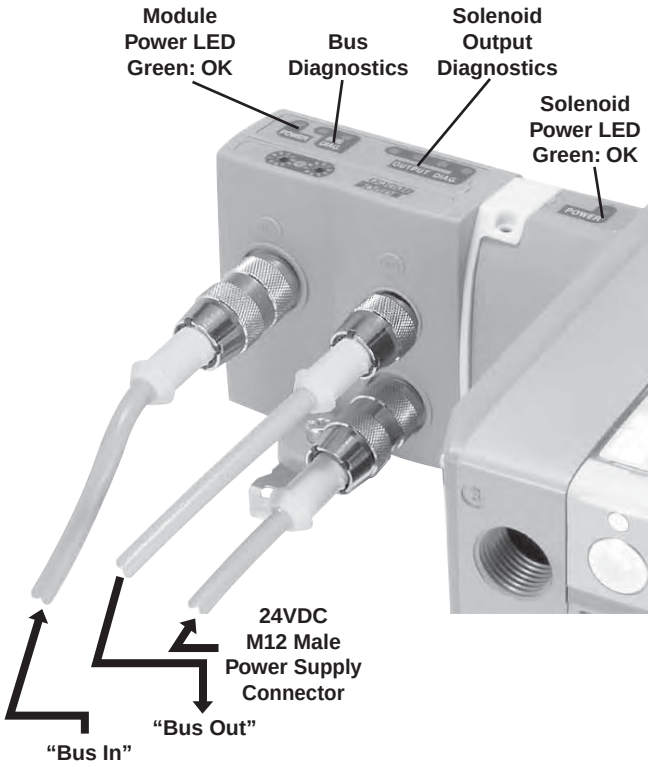

Protocol	Part Number
Profibus DP	**P2M2HBVP21600**
DeviceNet	**P2M2HBVD21600**
CANopen	**P2M2HBVC21600**
InterBus-S	P2M2HBVS11600

Fieldbus Accessories

	Protocol	Connector Type	Part Number
Power Supply Field Wireable Connector	Profibus DP / InterBus-S / DeviceNet / CANopen	M12 type A Female	**P8CS1205AA**
Line Termination Resistor	Profibus DP	M12 type B	**P8BPA00MB**
	DeviceNet / CANopen	M12 type A	**P8BPA00MA**

Note: Use standard cables and connectors for bus communications from your electrical supplier.

Connection

All communication modules have an M12 male connector for power supply.

Connector on Moduflex Modules are labeled. Bus Connectors are labeled "Bus In" and "Bus Out" while, Power Supply Connections are labeled "24VDC". Connect Fieldbus to "Bus In" and "Bus Out" and Power Supply to "24VDC".

Diagnostic

The two "power" indicators shown on the illustrations provide visual indication of the module and solenoid supply status.

Note: Output power to the solenoids can be wired to allow the user to turn the outputs off while allowing communications to remain on. This can be done by placing the user's Emergency Stop switch or other hard-wired control contact between Pin 1 and Pin 4. If this feature is not required, Pin 1 and Pin 4 should be wired together.

Parker Hannifin Corporation
Pneumatic Division
Richland, Michigan
www.parker.com/pneumatics

Communication Module: Connections, Addressing, Diagnostic

Bus Cable Connections

Profibus DP standard male and female type B M12 connectors.

Line termination P8BPA00MB, is necessary on the “bus out” connector of the last station.

This module incorporates an Autobaud detect feature, eliminating the need to set switches.

Addressing

Use the GSD file on web site.

The rotary switches enable configuration of the decimal address.

• www.parker.com/pneu/moduflex

Diagnostic

Diagnostic according to the module dialog shown on the illustration.

Bus In
(As Seen On Module)

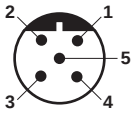

M12 Male
Type B

Pin Out
1 - + 5V
2 - Line A
3 - 0V
4 - Line B
5 - Shield

Bus Out
(As Seen On Module)

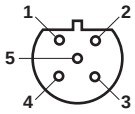

M12 Female
Type B

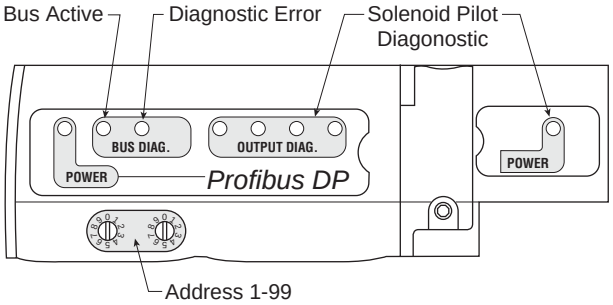

E

Bus Cable Connections

DeviceNet standard male and female type A M12 connectors.

Line termination P8BPA00MA, is necessary on the “bus out” connector of the last station.

Addressing

Use the EDS file on web site.

The rotary switches enable configuration of the node address (MAC ID) and the baud rate.

• www.parker.com/pneu/moduflex

Diagnostic

Diagnostic according to the module dialog shown on the illustration.

Bus In
(As Seen On Module)

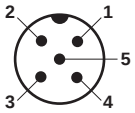

M12 Male
Type A

Pin Out
1 - Drain
2 - 24VDC
3 - 0VDC
4 - CAN-H
5 - CAN-L

Bus Out
(As Seen On Module)

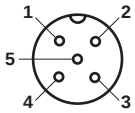

M12 Female
Type A

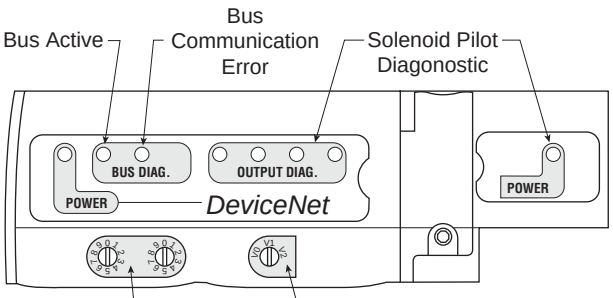

Parker Hannifin Corporation
Pneumatic Division
Richland, Michigan
www.parker.com/pneumatics

CANopen

Bus Cable Connections

CANopen standard male and female type A M12 connectors.

Line termination P8BPA00MA, is necessary on the “bus out” connector of the last station.

Addressing

Use the EDS file on web site.

The rotary switches enable configuration of the decimal address.

- www.parker.com/pneu/moduflex

Diagnostic

Diagnostic according to the module dialog shown on the illustration.

Bus In
(As Seen On Module)

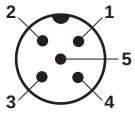

M12 Male
Type A

Pin Out
1 - CAN_SHLD
2 - CAN_V+
3 - CAN_GND
4 - CAN_H
5 - CAN_L

CAN_V+ : 24VDC module supply

Bus Out
(As Seen On Module)

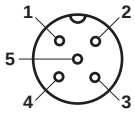

M12 Female
Type A

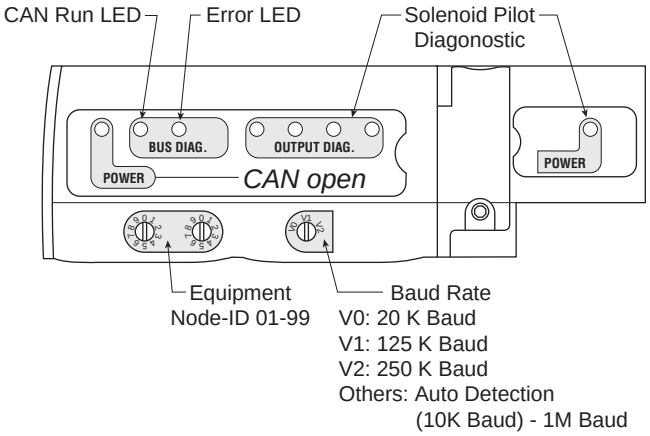

INTERBUS-S

Bus Cable Connections

The M23 connectors conform to “Interbus remote bus”.

This module operates at 500 kbps.

Addressing

InterBus-S is self addressing; therefore, it does not need any software or hardware configuration.

Diagnostic

Diagnostic according to the module dialog shown on the illustration.

This diagnostic conforms to the InterBus-S standard.

Bus In
(As Seen On Module)

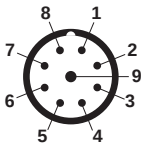

M23 Male

Pin Out
1 - D0
2 - D0
3 - DI
4 - DI
5 - Ground
6 - PE
7 - +24V
8 - 0V
9 - NC

Pin Out
1 - D0
2 - D0
3 - DI
4 - DI
5 - Ground
6 - PE
7 - +24V
8 - 0V
9 - RBST

Bus Out
(As Seen On Module)

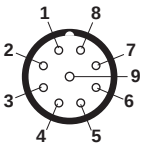

M23 Female

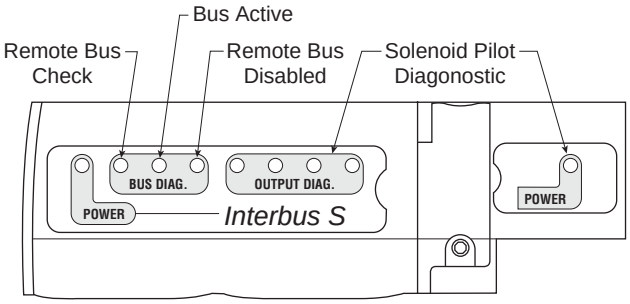

Note: For more details, please consult “Interbus remote bus” documentation.

Parker Hannifin Corporation
Pneumatic Division
Richland, Michigan
www.parker.com/pneumatics

AS-i Bus Communication Modules

P2M2HBVA10808A

P2M2HBVA10808B

P2M2HBVA10800

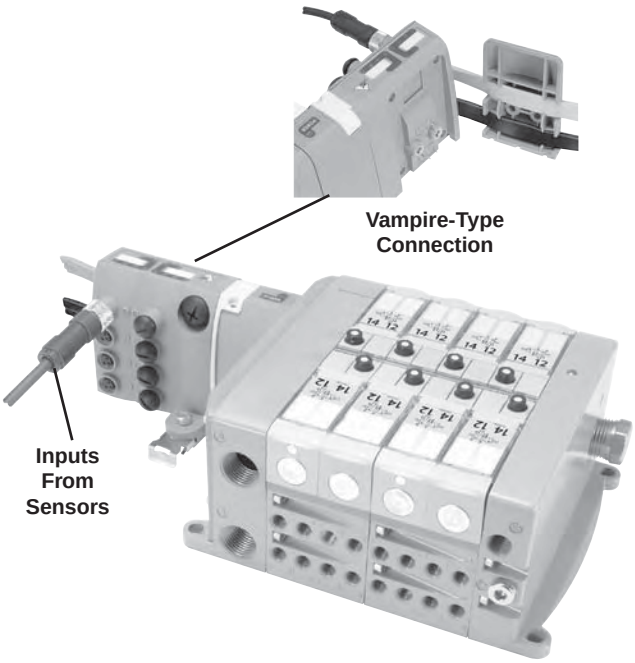

Standard AS-i Protocol (up to 31 nodes)

Communication Module for 8 Solenoids Max.
(2 nodes per module, 4 inputs, 4 solenoids per node)

Input / Output Capability	Weight (oz)	Part Number
0 inputs and 8 solenoid outputs	5.29	**P2M2HBVA10800**
8 (PNP) inputs on eight (M8) connectors and 8 solenoid outputs	7.05	**P2M2HBVA10808A**
8 (PNP) inputs on four (M12) connectors and 8 solenoid outputs	7.05	P2M2HBVA10808B

AS-i Version 2.1 Protocol (up to 62 nodes)

Communication Module for 6 Solenoids Max.
(2 nodes per module, 4 inputs, 3 solenoids per node)

Input / Output Capability	Weight (oz)	Part Number
0 inputs and 6 solenoid outputs	5.29	**P2M2HBVA20600**
8 (PNP) inputs on eight (M8) connectors and 6 solenoid outputs	7.05	**P2M2HBVA20608A**
8 (PNP) inputs on four (M12) connectors and 6 solenoid outputs	7.05	P2M2HBVA20608B

AS-i Bus Accessories

M12 Cable with Jack for Addressing

Length	Weight (oz)	Part Number
1 m	3.53	**P8LS12JACK**

Parker Hannifin Corporation
Pneumatic Division
Richland, Michigan
www.parker.com/pneumatics

www.comoso.com

AS-i Bus Communication Module: Addressing, Diagnostic, Input Wiring

Bus Addressing, First and Second Node

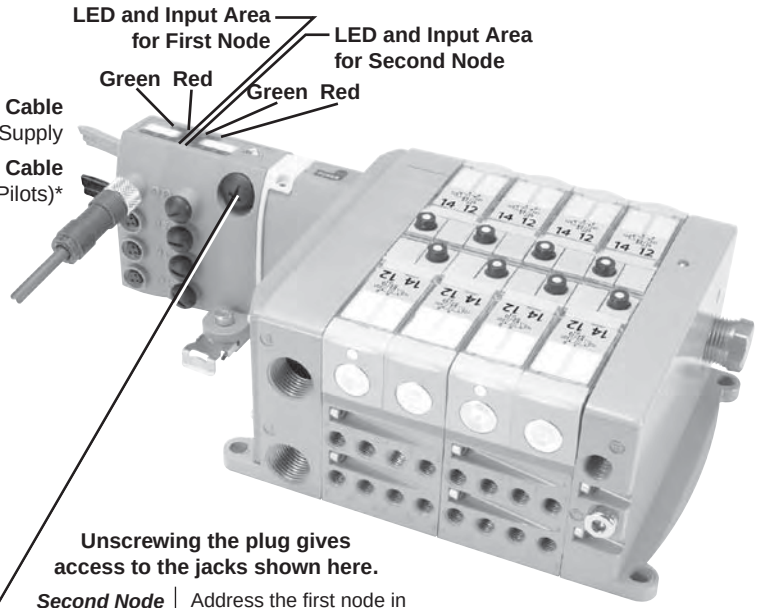

Second Node Addressing

First Node Addressing

Address the first node in the first step.

Profile: S - 7 . F . E . V2.0
S - 7 . A . E . V2.1

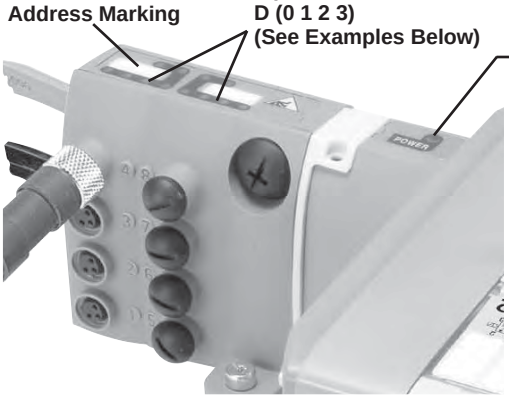

Bus Diagnostic

"Power" LED State	Off	Green	Red
Power Supply	Sol. Pilot Supply	Normal Operation	Solenoid Overload

First Node LEDs State		Second Node LEDs State		System Condition
Green LED	Red LED	Green LED	Red LED	
✷	❍	✷	❍	Normal Operation
❍	❍	❍	❍	No Module + Sensor Supply
❍	✳	❍	✳	Input Overload
❍	✷	❍	✳	No AS-i Communication
✳	✷	❍	✳	Address First Node = 0
✷	❍	✳	✷	Address Second Node = 0

✷ ON ❍ OFF ✳ BLINK

Input Wiring

Physical Input (I, II, III, IV) = D (0 1 2 3) First Node,
Physical Input (V, VI, VII, VIII) = D (0 1 2 3) Second Node.

Examples: Physical Input III = Logical Input 6.2,
Physical Input V = Logical Input 7.0.

M8 Female Connectors

Pin Out

1 - 24VDC / AS-i
3 - 0VDC / AS-i
4 - Input

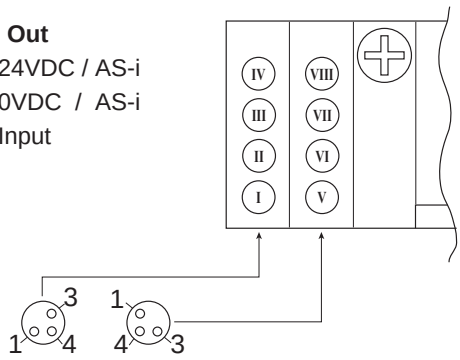

M12 Female Connectors

Pin Out

1 - 24VDC / AS-i
2 - Second Input
3 - 0VDC / AS- i
4 - First Input
5 - Not Connected

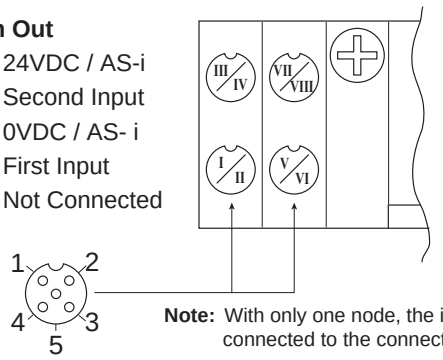

Note: With only one node, the inputs II and IV are connected to the connections on the right.

Parker Hannifin Corporation
Pneumatic Division
Richland, Michigan
www.parker.com/pneumatics

www.comoso.com

Solenoid Pilot Diagnostic Common to All Device Bus Modules

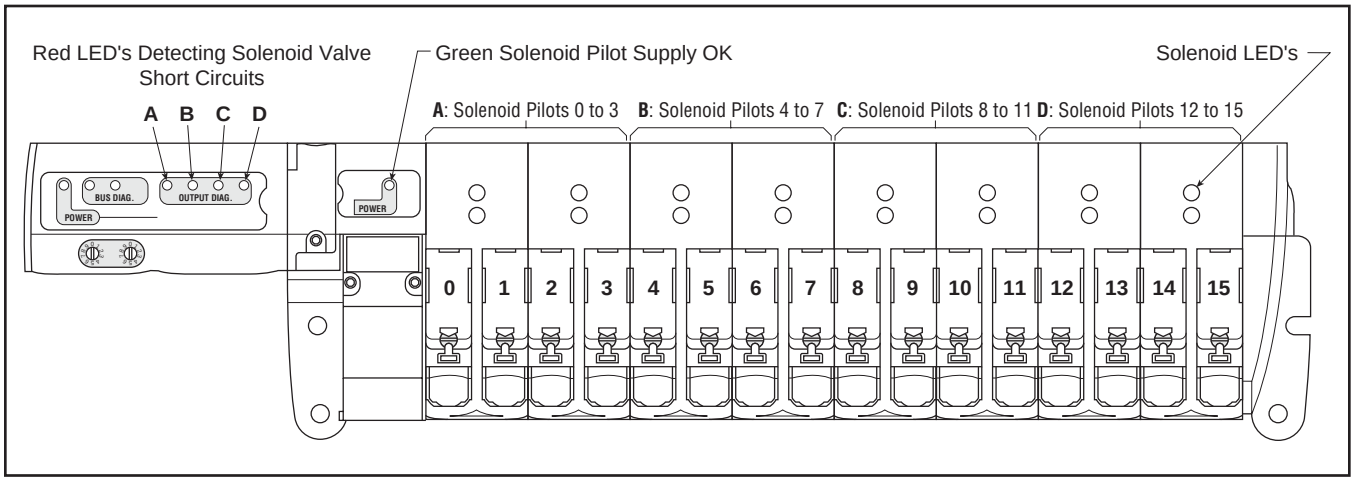

Inside the communication module, solenoid valve control is protected against short-circuits with the following visual indication provided:

- The red LEDs with code, shown above, detect solenoid valve short-circuits.
- Supply is OK when the solenoid pilot power supply indicator is green.

Bus Cable Protection

Shield Connections for Profibus DP, DeviceNet and CANopen

To provide protection against electro-magnetic interferences, the bus cables are shielded. The “bus in” and “bus out” connectors each include a pin for connecting the cable shield. It is safer to connect the shield to the protected earth (PE) at both ends of the bus. Within the communication module, provision is made to enable shield continuity by connecting the two shield pins.

The protected earth must be connected locally on each module for CE accordance.

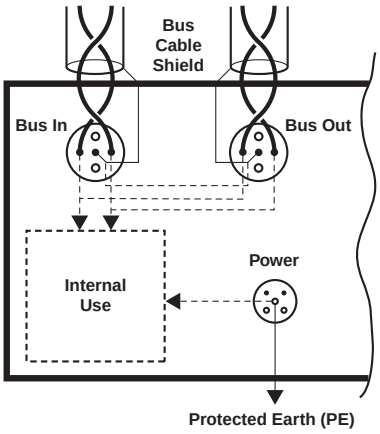

Parker Hannifin Corporation
Pneumatic Division
Richland, Michigan
www.parker.com/pneumatics

Solenoid Pilot Diagnostic Common to All Moduflex Fieldbus Modules

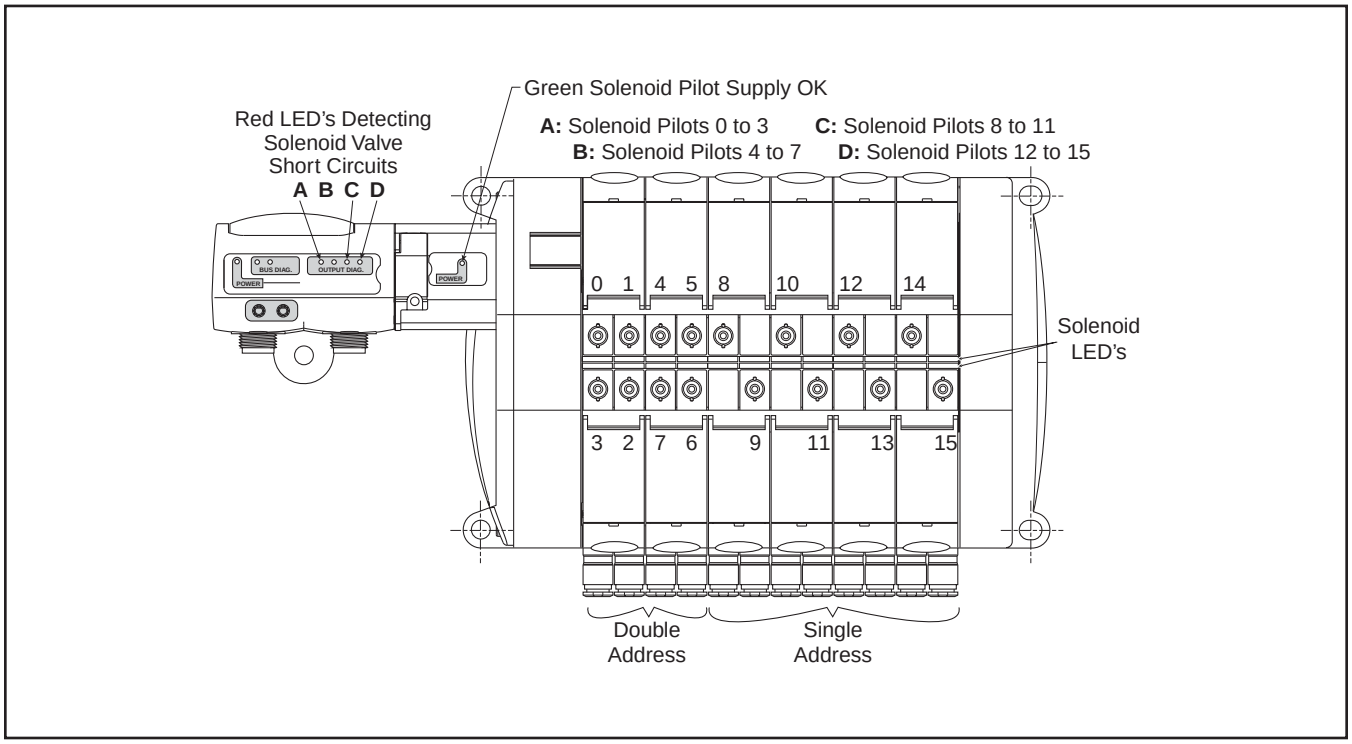

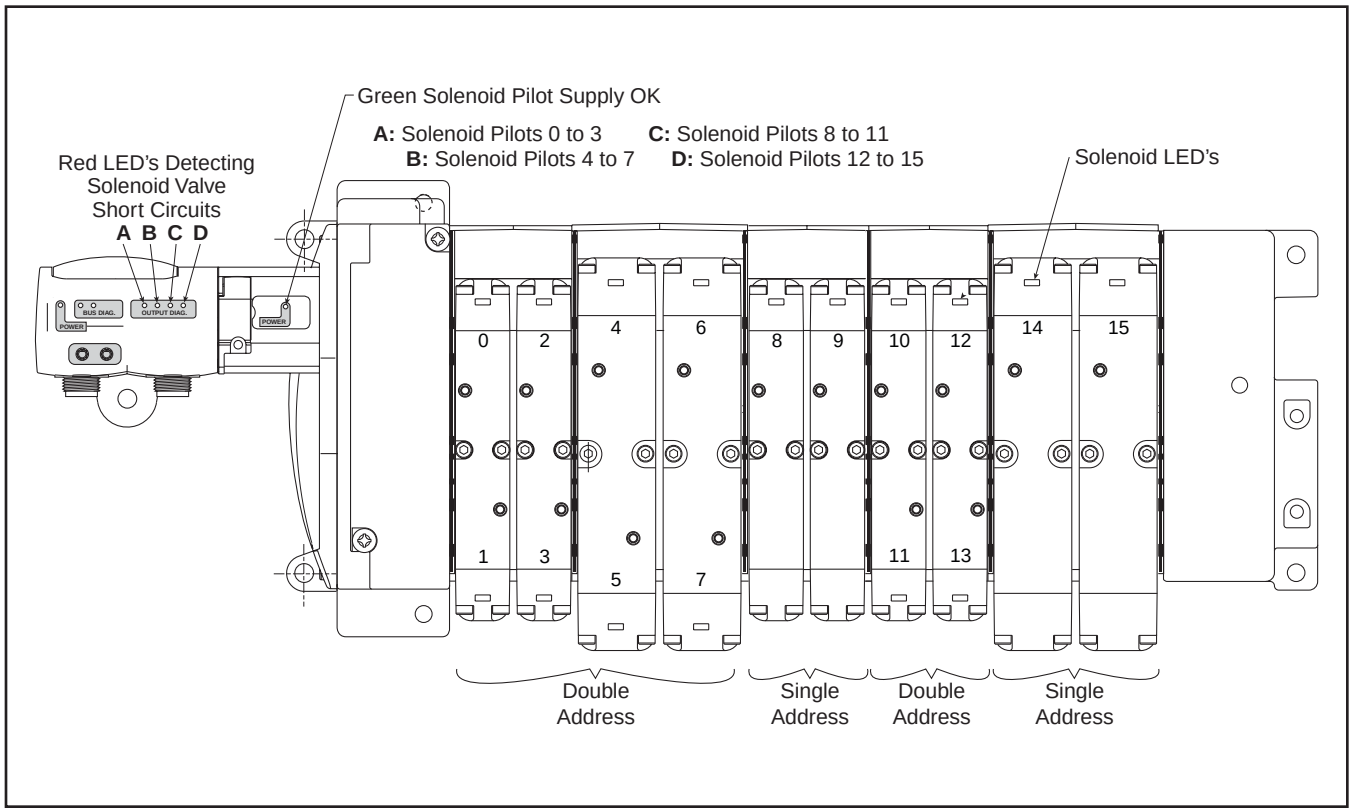

Inside the communication module, solenoid valve control is protected against short-circuits with the following visual indication provided:

- The red LEDs with code, shown above, detect solenoid valve short-circuits.
- Supply is OK when the solenoid pilot power supply indicator is green.

Parker Hannifin Corporation
Pneumatic Division
Richland, Michigan
www.parker.com/pneumatics

Serial Bus Specifications

All Buses	EMC / CE Mark	According to EN 61 000-6-2	EN 50081-2

AS-i Bus	AS-i Line	According to EN 50295
	Solenoid Pilot Voltage	24VDC
	Module Consumption	max. 70 mA (2 nodes)
	Max. Supply for All Inputs	240 mA (including internal input consumption)
	Internal Input Consump.	9 mA for each active input
	Inputs	According to IEC 1131-2 class 2
	Certification	These products have been developed according to the association complete specification (v.2.11) and to the slave profiles S-7.F.E or S-B.F.E

Device Bus	Bus Line	According to each bus specification		
	Module Voltage	20 to 30VDC		
	Solenoid Pilot Voltage	24VDC		
	Module Consumption	Profibus DP max. 1.5W	DeviceNet / CANopen max. 1.5W	InterBus-S max. 2W
	Outputs	Overload protection		
	Certification	DeviceNet: Compliant to Composite Test Revision 17, Test Suite: M002		
		Profibus-DP: Compliant to Test Specifications for Profibus DP Slaves, Version 2.0, February 2000, based on EN 50170-2 at Siemens AG in Furth.		
		InterBus-S: This product has passed the relevant tests in accordance with the Interbus conformance requirements Certified No. 385.		

I/O Tables Common to All Device Bus Modules

Input Data Table

Byte	Bit 0	Bit 1	Bit 2	Bit 3	Bit 4	Bit 5	Bit 6	Bit 7
0	Discrete Input 0 (Diagnostic LED 0-3)	Discrete Input 1 (Diagnostic LED 4-7)	Discrete Input 2 (Diagnostic LED 8-11)	Discrete Input 3 (Diagnostic LED 12-15)	—	—	—	—

Output Data Table

Byte	Bit 0	Bit 1	Bit 2	Bit 3	Bit 4	Bit 5	Bit 6	Bit 7
0	Discrete Output 0	Discrete Output 1	Discrete Output 2	Discrete Output 3	Discrete Output 4	Discrete Output 5	Discrete Output 6	Discrete Output 7
1	Discrete Output 8	Discrete Output 9	Discrete Output 10	Discrete Output 11	Discrete Output 12	Discrete Output 13	Discrete Output 14	Discrete Output 15

Parker Hannifin Corporation
Pneumatic Division
Richland, Michigan
www.parker.com/pneumatics

www.comoso.com

The Isysnet System

Isysnet has four major components:

- **Valve driver module** provide control for 32 solenoids on a manifold, with bus extension providing connectivity to 3 more manifolds
- **I/O modules** provide the field interface, system-interface circuitry, and bases for mounting
- **Communication modules** provide the network-interface circuitry
- **Power distribution module** provide 5 additional power inputs to the Isysnet system

Isysnet Features

- Highly modular design (4pt – 16pt modularity)
- Broad application coverage
- Channel-level diagnostics (LED)
- Channel-level alarm and annunciation (electronic)
- Channel-level open-wire detection with electronic feedback
- Parameter-level explicit messaging
- Horizontal and vertical mounting without derating
- 5g vibration
- Electronic and mechanical keying
- Robust backplane design
- Quick-disconnects for I/O and network connectivity
- Built-in panel grounding
- Color-coded module labels
- UL, C-UL, and CE certifications (as marked)
- Highly reliable structural integrity
- Optical isolation between field and system circuits

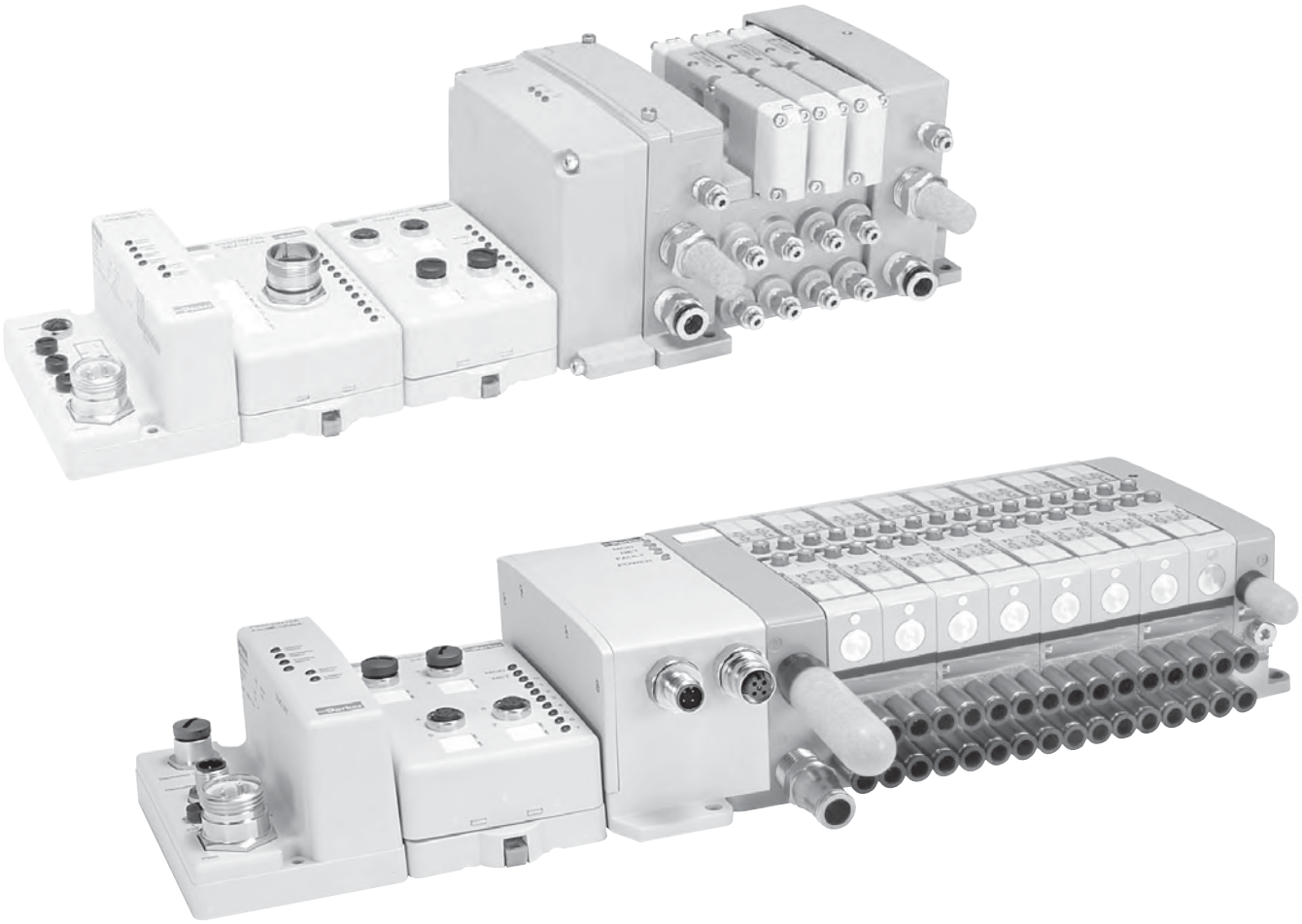

Parker Hannifin Corporation
Pneumatic Division
Richland, Michigan
www.parker.com/pneumatics

www.comoso.com

Isys & Isysnet Fieldbus System

- A complete fieldbus communication offering for all Isys ISO and Isys Micro valves.
- CSA, C-US and CE certifications (as marked).

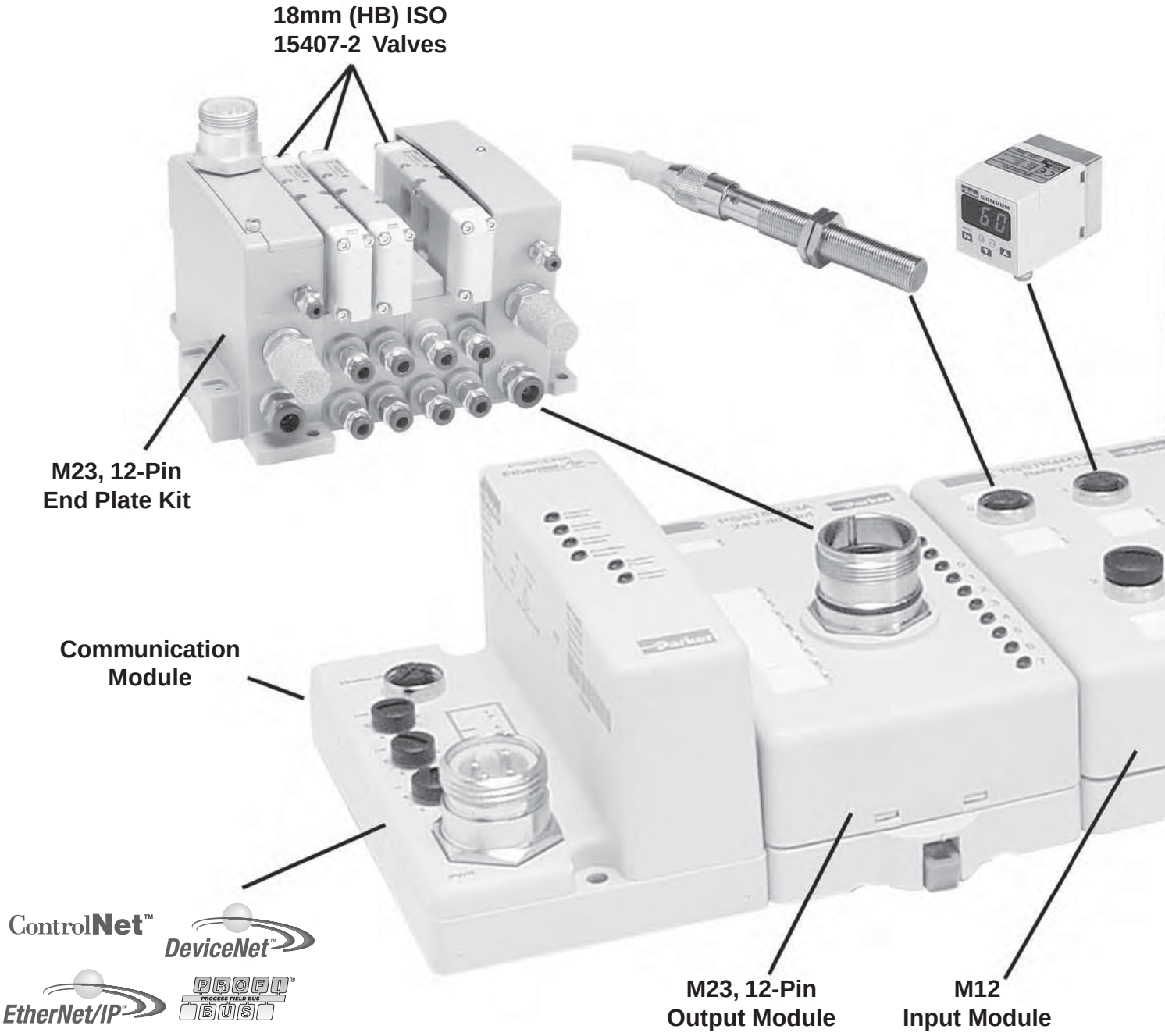

Parker Hannifin Corporation
Pneumatic Division
Richland, Michigan
www.parker.com/pneumatics

www.comoso.com

I/O Configuration

- Centralized Isysnet system.
- Pneumatics and I/O are in close proximity to one another.
- I/O density per module = 8 or 16.

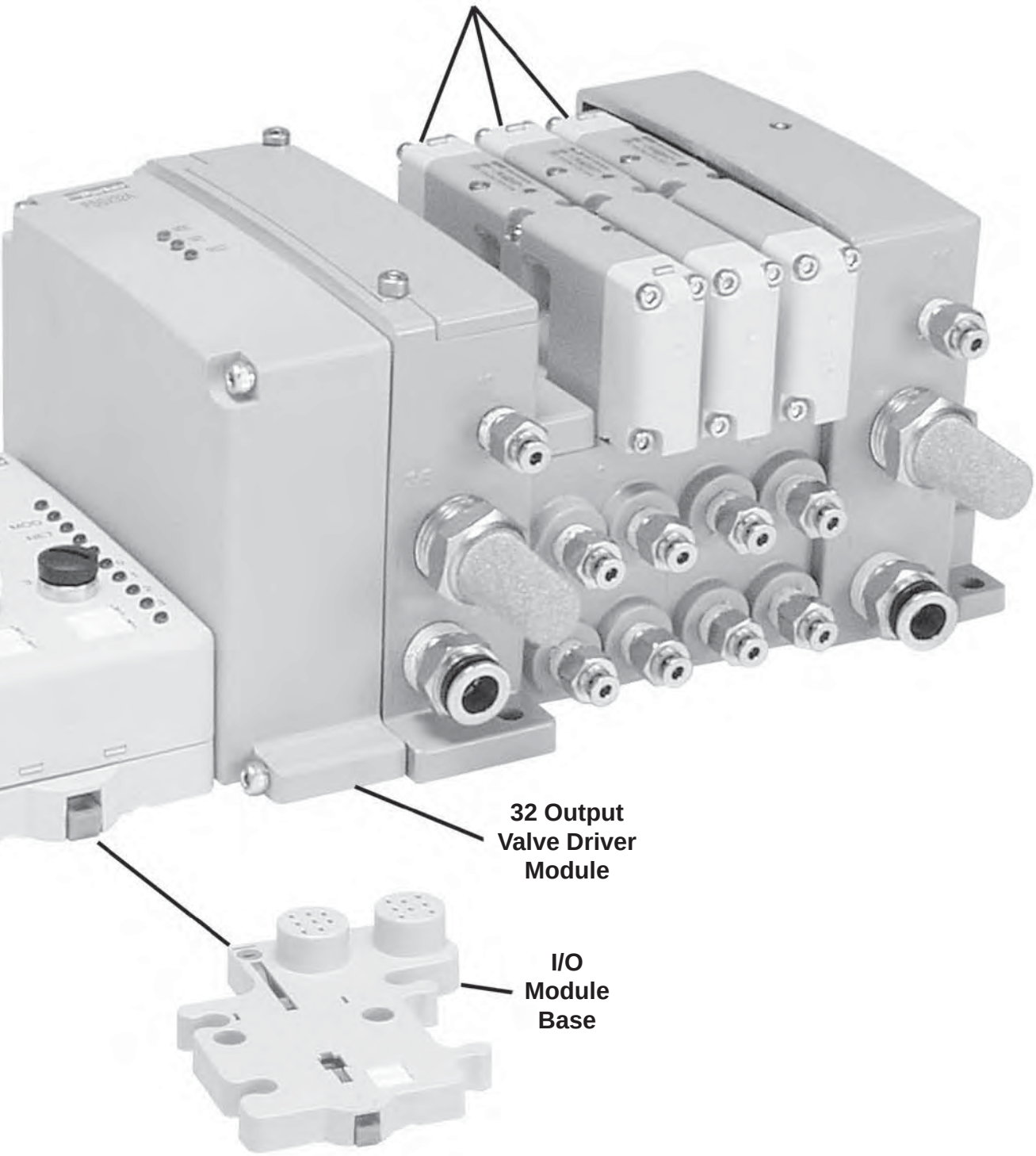

Parker Hannifin Corporation
Pneumatic Division
Richland, Michigan
www.parker.com/pneumatics

www.comoso.com

Isys & Isysnet Fieldbus System

- A complete fieldbus communication offering for all Isys ISO and Isys Micro valves.
- CSA, C-US and CE certifications (as marked).

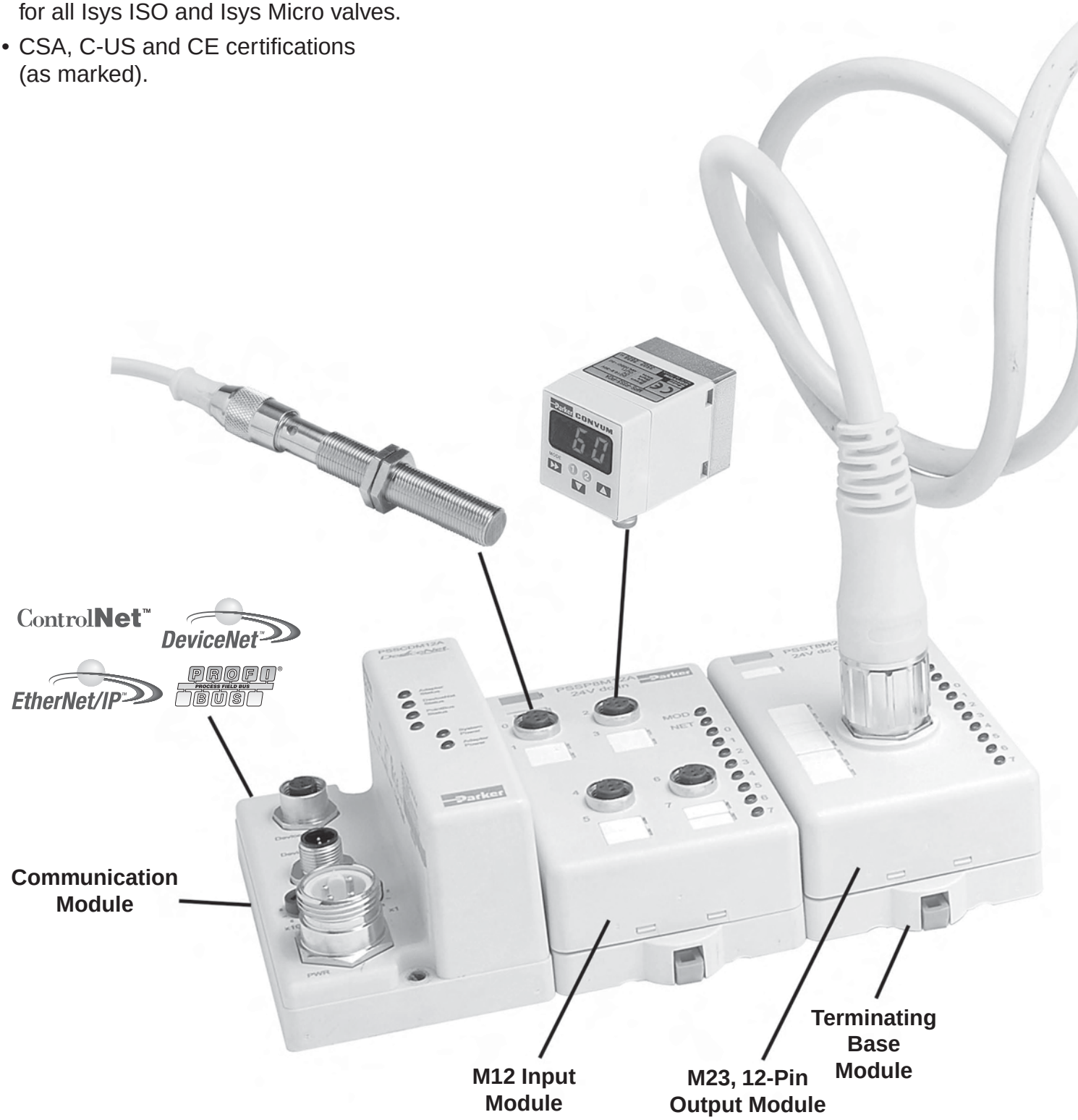

Parker Hannifin Corporation
Pneumatic Division
Richland, Michigan
www.parker.com/pneumatics

www.comoso.com

I/O Configuration

- Decentralized Isysnet system.
- Pneumatics and I/O are not in close proximity with one another.
- M23, 12-Pin or 19-Pin output extension to an Isys valve island.
- 25-Pin, D-Sub output extension to an Isys valve island.
- I/O density per module = 8 or 16.

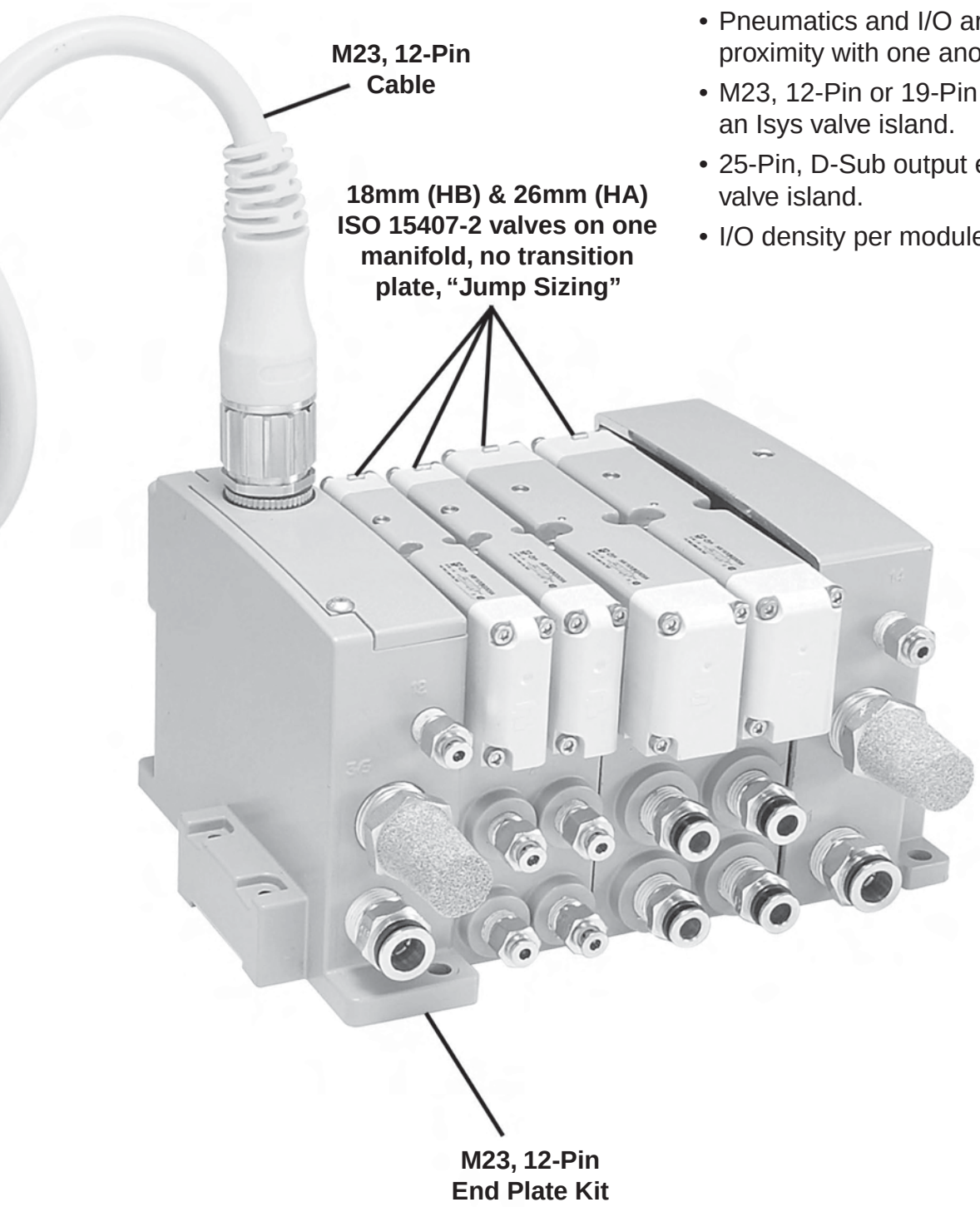

Parker Hannifin Corporation
Pneumatic Division
Richland, Michigan
www.parker.com/pneumatics

www.comoso.com

Isys & Isysnet Fieldbus System

- A complete fieldbus communication offering for all Isys ISO and Isys Micro valves.
- CSA, C-US and CE certifications (as marked).

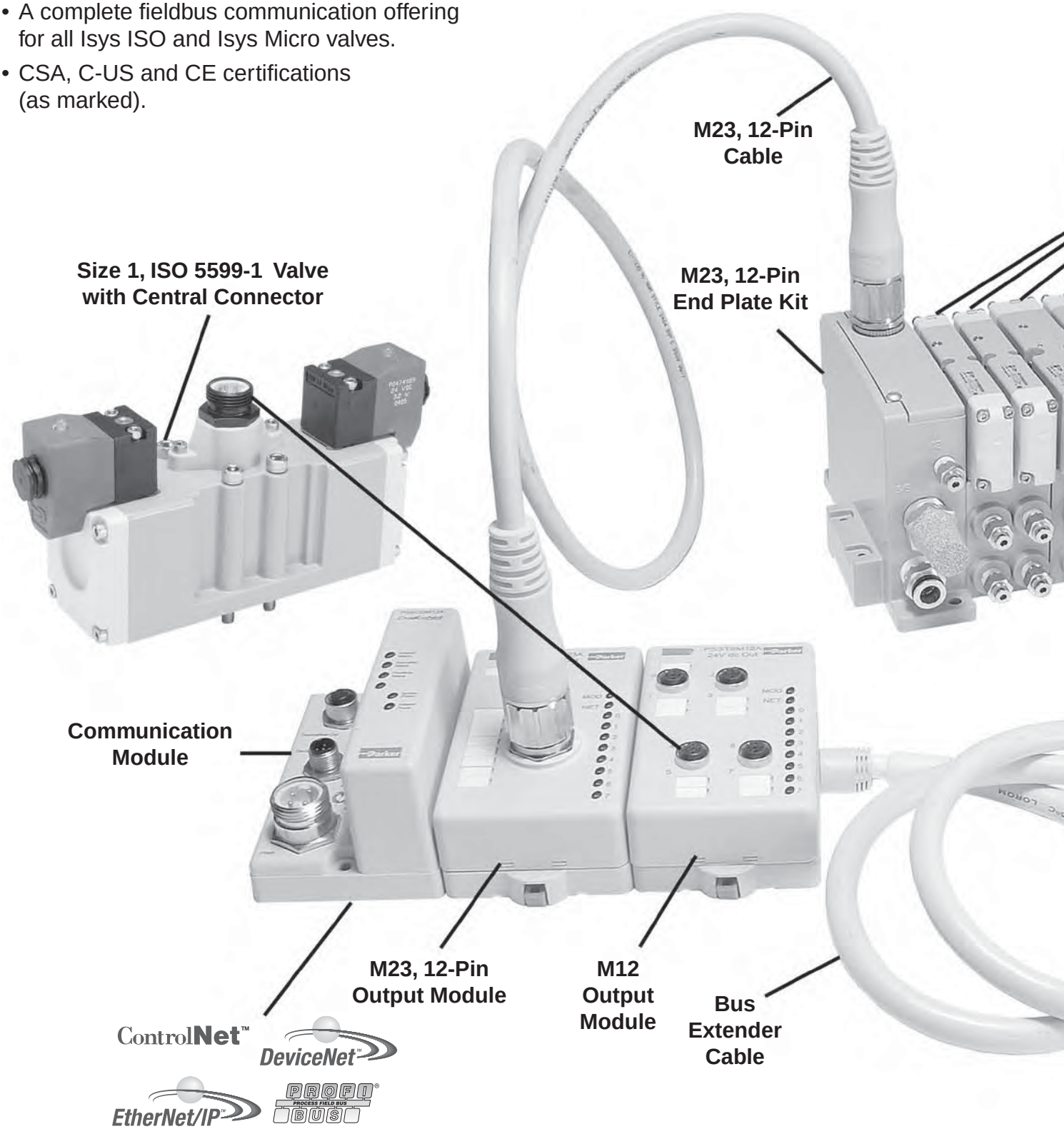

Parker Hannifin Corporation
Pneumatic Division
Richland, Michigan
www.parker.com/pneumatics

www.comoso.com

I/O Configuration

- Decentralized Isysnet system.
- Pneumatics and I/O are not in close proximity with one another.
- M23, 12-Pin or 19-Pin output extension to an Isys valve island.
- Separate output and input clusters using a bus extender cable.
- Separate output and input power using a power extension module.
- 25-Pin, D-Sub output extension to an Isys valve island.
- I/O density per module = 8 or 16.

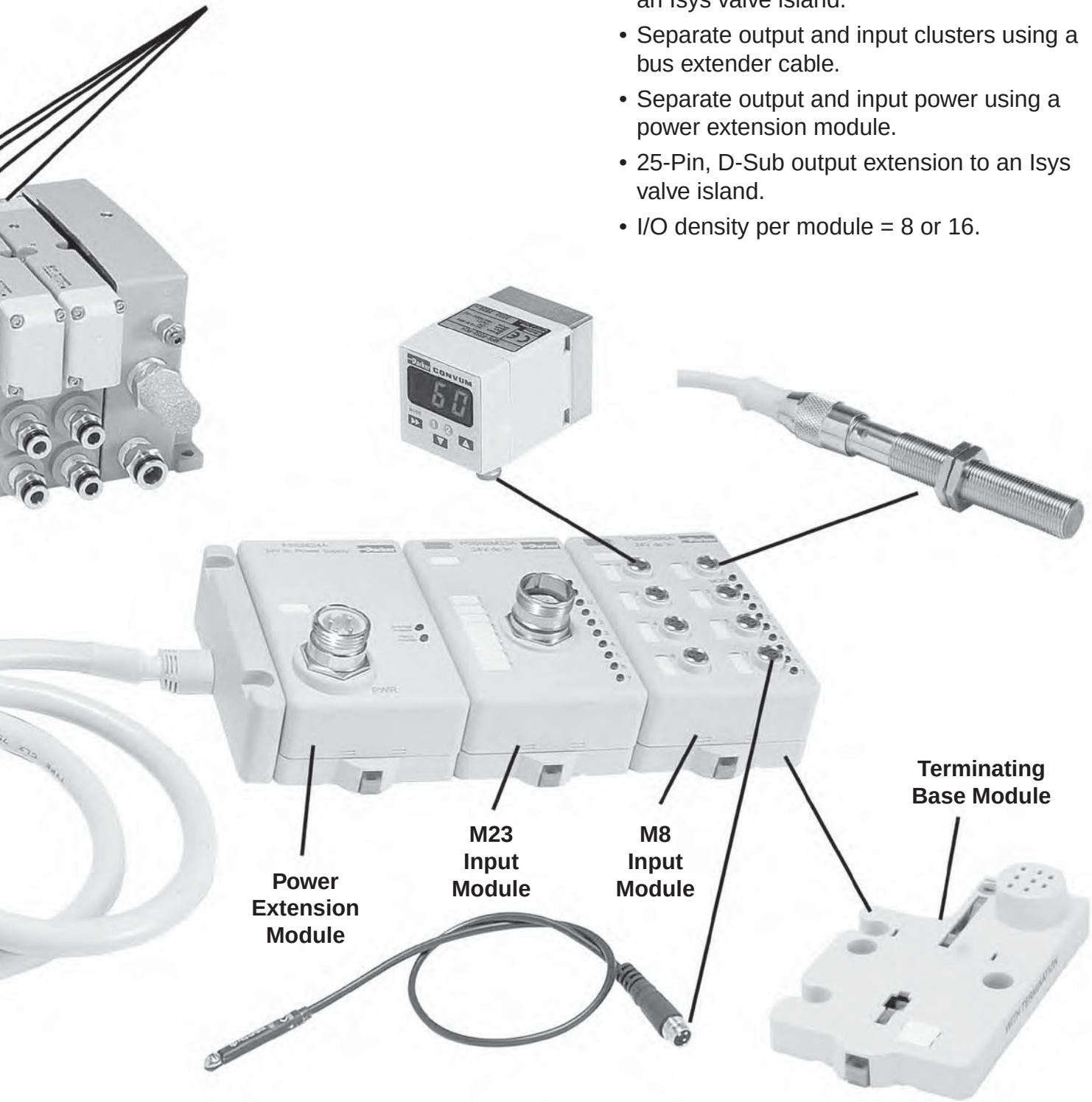

Parker Hannifin Corporation
Pneumatic Division
Richland, Michigan
www.parker.com/pneumatics

www.comoso.com

Communications Module

Protocol	Part Number
Device**Net™**	**PSSCDM18PA** (7/8" Mini) **or PSSCDM12A** (M12)
Control**Net**™	**PSSCCNA**
EtherNet I/P™	**PSSCENA**
Profibus-DP®	**PSSCPBA**

All Modules IP67 Certified
Reference the following Documents for Installation Instructions.
DeviceNet - E101P, PSS-UM001A; Control Net - E103P
Ethernet I/P - E104P; Profibus-DP - E102P
EDS and GSD files located at www.parker.com/pneu/Isysnet

PSSCENA

PSSCCNA

Devicebus Terminating Resistor

DeviceNet M12 Type A	P8BPA00MA
Profibus-DP M12 Type B	P8BPA00MB

P8BPA00MA

Digital Inputs

I/O Modules	Part Number	Voltage
16 Digital Inputs M12, 5-Pin used with PNP Sourcing Input Device	**PSSN16M12A**	10 to 28.8VDC
8 Digital Inputs M12, 5-Pin used with PNP Sourcing Input Device	**PSSN8M12A**	10 to 28.8VDC
8 Digital Inputs M12, 5-Pin used with NPN Sinking Input Device	**PSSP8M12A**	10 to 28.8VDC
8 Digital Inputs M8, 3-Pin used with PNP Sourcing Input Device	**PSSN8M8A**	10 to 28.8VDC
8 Digital Inputs M8, 3-Pin used with NPN Sinking Input Device	**PSSP8M8A**	10 to 28.8VDC
8 Digital Inputs M23, 12-Pin used with NPN Sinking Input Device	**PSSP8M23A**	10 to 28.8VDC
8 Digital Inputs M23, 12-Pin used with PNP Sourcing Input Device	**PSSN8M23A**	10 to 28.8VDC

All Modules IP67 Certified
Reference E106P Documents for Installation Instructions.
See www.parker.com/pneu/Isysnet

PSSN16M12A

PSSN8M8A

PSSP8M23A

Parker Hannifin Corporation
Pneumatic Division
Richland, Michigan
www.parker.com/pneumatics

www.comoso.com

Digital Outputs

I/O Modules	Part Number	Voltage
+ 16 Digital Outputs M23, 19-Pin used with PNP Sourcing Outputs	**PSST16M23A**	10 to 28.8VDC
+ 16 Digital Outputs D-Sub, 25-Pin used with PNP Sourcing Outputs	**PSST16D25A**	10 to 28.8VDC
+ 16 Digital Outputs M12, 5-Pin used with PNP Sourcing Outputs	**PSST16M12A**	10 to 28.8VDC
+ 8 Digital Outputs M12, 5-Pin used with PNP Sourcing Outputs	**PSST8M12A**	10 to 28.8VDC
+ 8 Digital Outputs M8, 3-Pin used with PNP Sourcing Outputs	**PSST8M8A**	10 to 28.8VDC
§ 4 Digital Output, High Watt Relay M12, 5-Pin used with PNP Sourcing Outputs (2 Amp)	**PSSTR4M12A**	24VDC
+ 8 Digital Outputs M23, 12-Pin used with PNP Sourcing Outputs	**PSST8M23A**	10 to 28.8VDC

All Modules IP67 Certified
Reference the following Documents for Installation Instructions.
+ E107P
§ E109P
See www.parker.com/pneu/Isysnet

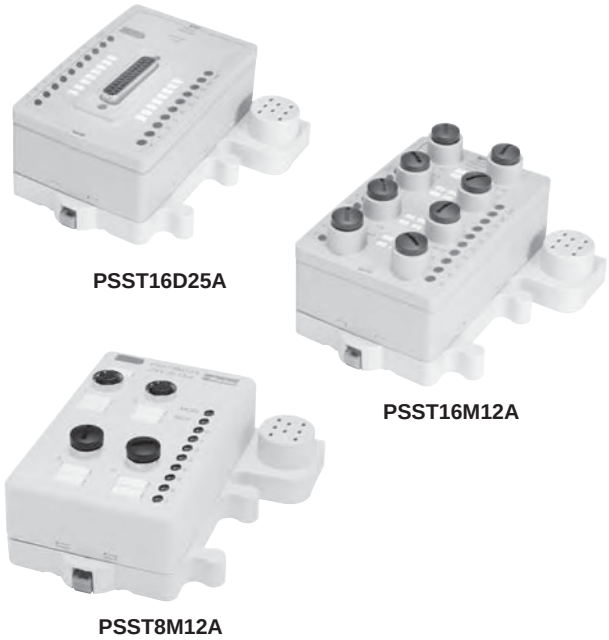

Analog Inputs

I/O Modules	Part Number	Voltage
‡ 2 Analog Inputs Voltage M12, 5-Pin	**PSSNAVM12A**	-10 to 10VDC or 0 to 10VDC
‡ 2 Analog Inputs Current M12, 5-Pin	**PSSNACM12A**	4 to 20mA or 0 to 20mA

All Modules IP67 Certified
Reference the following Documents for Installation Instructions.
‡ E110P
See www.parker.com/pneu/Isysnet

Analog Outputs

I/O Modules	Part Number	Voltage
** 2 Analog Outputs Voltage M12, 5-Pin	**PSSTAVM12A**	0 to 10V ± 10V
** 2 Analog Outputs Current M12, 5-Pin	**PSSTACM12A**	4 to 20mA or 0 to 20mA

All Modules IP67 Certified
Reference the following Documents for Installation Instructions.
**E111P
See www.parker.com/pneu/Isysnet

Parker Hannifin Corporation
Pneumatic Division
Richland, Michigan
www.parker.com/pneumatics

www.comoso.com

Terminating Base Module

Base Module	Part Number
Termination Base for Stand Alone Units	**PSSTERM**

Used as the last Terminating Module for a Stand Alone Isysnet Assembly.

PSSTERM

Power Extender Module

Extender Module	Part Number
24VDC Field Power Module	**PSSSE24A**

A Power Extender Module must be used on every 14th Module in an Isysnet assembly. See www.parker.com/pneu/Isysnet

Reference Document E105P and PSS-SG001 for configuration instructions. See www.parker.com/pneu/Isysnet

PSSSE24A

Replacement Base Module

Base Module	PSSBASE

PSSBASE

Bus Extender Cable

1 Meter Cable*	PSSEXT1	24VDC
3 Meter Cable*	PSSEXT3	24VDC

* Requires a PSSSE24 Power Extender Module

IP67 Certified

Reference the following Documents for Installation Instructions.
E117P

See www.parker.com/pneu/Isysnet

PSSEXT1

Isys Micro Bus Extender Cable

1 Meter Cable*	PSSVEXT1	24VDC

* IP67 Certified.

PSSVEXT1

Parker Hannifin Corporation
Pneumatic Division
Richland, Michigan
www.parker.com/pneumatics

www.comoso.com

Using Bus Extender Cables

Example #1:
Isys with Standard Bus Extender Cable

- Separate the communication module and a portion of the I/O from other I/O and the valve manifold.
- Commonly used when overall length is restricted.
- PSSSE24A is needed on the extension. No 24VDC connector needed on the Isysnet end plate.
- Can be used with Isys ISO and Isys Micro valves.

Example #2:
Isys Micro with Bus Extension on Valve Driver Module – No additional I/O at the Extension

- Add up to three additional valve manifolds without adding another communication module.
- No PSSSE24A is needed on the Extension when the Valve Driver Module with 24VDC Connector is used.
- Commonly used when many valves are required.
- Bus expansion only available with Isys Micro valves.

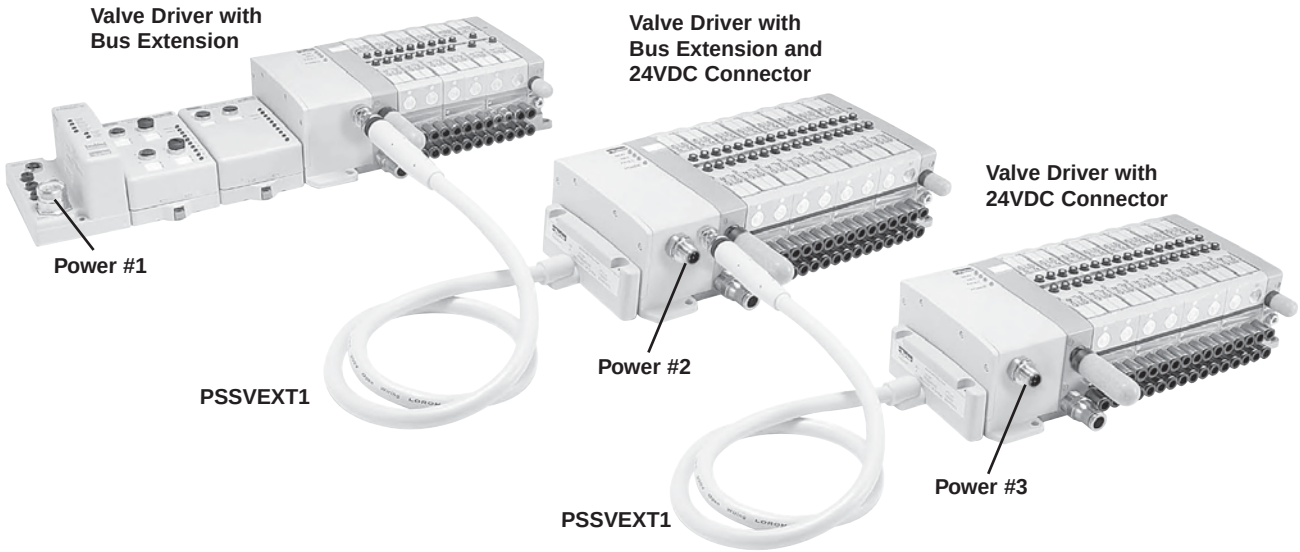

Parker Hannifin Corporation
Pneumatic Division
Richland, Michigan
www.parker.com/pneumatics

www.comoso.com

Using Bus Extender Cables

Example #3:
Isys Micro with Bus Extension on Valve Driver – With I/O at Extension

- Add up to three additional valve manifolds without adding another communication module.
- PSSSE24A is needed on the Extension. No 24VDC Connector needed on the Isysnet end plate.
- Commonly used when many valves are required, and each location requires additional I/O.
- Bus expansion only available with Isys Micro.

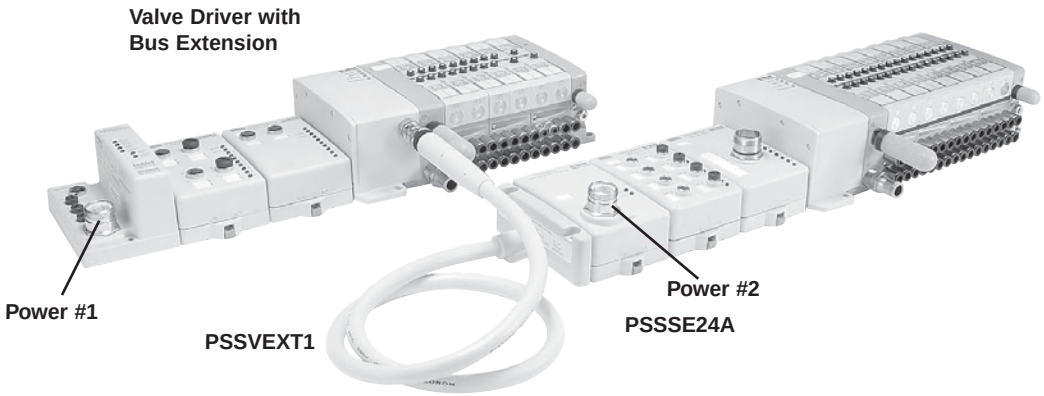

Example #4:
Isys Micro with Bus Extension on Valve Driver Module – With I/O at the Extension and larger Isys ISO Valve Manifold

- Add up to two additional Isys Micro valve manifolds and one Isys ISO valve manifold without adding another communication module.
- PSSSE24A is needed on the Extension.
- Isys ISO valve manifold must be the last manifold on the Extension
- Commonly used when many valves are required, and each location requires additional I/O.
- Bus expansion only available with Isys Micro. Isys ISO manifold must be the last manifold in the system.

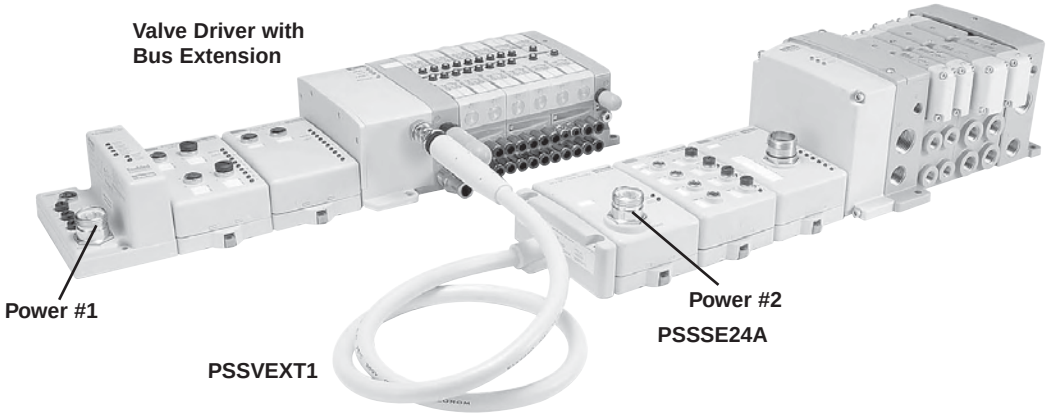

Parker Hannifin Corporation
Pneumatic Division
Richland, Michigan
www.parker.com/pneumatics

www.comoso.com

Digital I/O Modules

Choose digital I/O modules when you need:

- **Input Modules.** An input module responds to an input signal in the following manner:
  - Input filtering limits the effect of voltage transients caused by contact bounce and/or electrical noise. If not filtered, voltage transients could produce false data. All input modules use input filtering.
  - Optical isolation shields logic circuits from possible damage due to electrical transients.
  - Logic circuits process the signal.
  - An input LED turns on or off indicating the status of the corresponding input device.
- **Output Modules.** An output module controls the output signal in the following manner:
  - Logic circuits determine the output status.
  - An output LED indicates the status of the output signal.
  - Optical isolation separates module logic and bus circuits from field power.
  - The output driver turns the corresponding output on or off.
- **Surge Suppression.** Most output modules have built-in surge suppression to reduce the effects of high-voltage transients. However, we recommend that you use an additional suppression device if an output is being used to control inductive devices, such as:
  - Relays
  - Motor starters
  - Solenoids
  - Motors

  Additional suppression is especially important if your inductive device is in series with, or parallel to, hard contacts such as:
  - Push buttons
  - Selector switches

The digital I/O modules support:

- A wide variety of voltage interface capabilities
- Isolated and non-isolated module types
- Point-level output fault states
- Choice of direct-connect or rack-optimized communications
- Field-side diagnostics on select modules

Connector types are indicated by the catalog number. For example, the PSSN8M12A has an M12 connector.

Digital DC Input Modules

	PSSN8M8A PSSN8M12A PSSN8M23A	**PSSN16M12A**	**PSSP8M8A PSSP8M12A PSSP8M23A**
Number of Inputs	8 PNP Sourcing	16 PNP Sourcing	8 NPN Sinking
Keyswitch Position	1		
Voltage, On-State Input, Nom.	24VDC		
Voltage, On-State Input, Min.	10VDC		
Voltage, On-State Input, Max.	28.8VDC		
Input Delay Time, ON to OFF	0.5 ms hardware + (0…65 ms selectable)*		
Current, On-State Input, Min.	2 mA		
Current, On-State Input, Max.	5 mA		
Current, Off-State Input, Max.	1.5 mA		
Bus Power Current (mA)	75		
Power Dissipation, Max.	1.0 W @ 28.8VDC		

* Input ON-to-OFF delay time is the time from a valid input signal to recognition by the module.

Digital DC Output Modules

	PSST8M8A PSST8M12A PSST8M23A	**PSST16M223A PSST16D25A PSST16M12A**
Number of Outputs	8 PNP sourcing	16 PNP Sourcing
Keyswitch Position	1	
Voltage, On-State Output, Nom.	24VDC	
Voltage, On-State Output, Min.	10VDC	
Voltage, On-State Output, Max.	28.8VDC	
Output Current Rating, Max.	3.0 A per module, 1.0 A per channel	
Bus Power Current (mA)	75	
Power Dissipation, Max.	1.2 W @ 28.8VDC	

Parker Hannifin Corporation
Pneumatic Division
Richland, Michigan
www.parker.com/pneumatics

www.comoso.com

Relay Output Module

	PSSTR4M12A
Number of Outputs	4 Form A (N.O.) relays, isolated
Key switch Position	7
Output Delay Time, ON to OFF, Max.	26 ms*
Contact Resistance, Initial	30 mΩ
Current Leakage, Off-State Output, Max.	1.2 mA and bleed resistor thru snubber circuit @ 240V ac
Output Current Rating, Max	8.0 A per module, 2.0 A per channel
Bus Power Current (mA)	90
Power Dissipation, Max.	0.5 W

*Time from valid output off signal to relay de-energization by module.

Analog I/O Modules

The Isysnet analog modules support: on-board, channel-level data alarming (four set-points per channel); scaling to engineering units; channel-level diagnostics (electronic bits and LEDs); and integer format.

Choose analog I/O modules when you need:

- **Individually configurable channels** to use the module(s) with a variety of sensors.
- **On-board scaling** to eliminate the need to scale the data in the controller. Controller processing time and power are preserved for more important tasks, such as I/O control, communications, or other user-driven functions.
- **On-line configuration.** Modules can be configured in the RUN mode using the programming software or the control program. This allows you to change configuration while the system is operating. For example, the input filter for a particular channel could be changed, or a channel could be disabled based on a batch condition. To use this feature, the controller and network interface must also support this feature.
- **Over- and under-range detections and indications.** This eliminates the need to test values in the control program, saving valuable processing power of the controller. In addition, since alarms are handled by the module, the response is faster and only a single bit per channel is monitored to determine if an error condition has occurred.
- **Ability to direct output device operation during an abnormal condition.** Each channel of the output module can be individually configured to hold its last value or assume a user-defined value on a fault condition. This feature allows you to set the condition of your analog devices, and therefore your control process, which may help to ensure a reliable shutdown.
- **Ability to individually enable and disable channels.** Disabling unused channels improves module performance.
- **Selectable input filters** This lets you select the filter frequencies for each channel that best meets the performance needs of your application based on environmental limitations. Lower filter settings provide greater noise rejection and resolution. Higher filter settings provide faster performance. Note: The analog modules provide four input filter selections.
- **Selectable response to broken input sensor.** This feature provides feedback to the controller that a field device is not connected or operating properly. This lets you specify corrective action based on the bit or channel condition.
- **High accuracy.** The modules share a high accuracy rating of ±0.1% of full-scale accuracy at 25 °C.

Parker Hannifin Corporation
Pneumatic Division
Richland, Michigan
www.parker.com/pneumatics

www.comoso.com

Analog Input Modules

	PSSNACM12A	PSSNAVM12A
Number of Inputs	2	2
Key switch Position	3	3
Input Signal Range	4…20 mA 0…20 mA	-10 to 10VDC 0 to 10VDC
Input Resolution, Bits	16 bits - over 21 mA 0.32 µA/cnt	15 bits plus sign 320 µV/cnt in unipolar or bipolar mode
Absolute Accuracy, Current Input	0.1% Full Scale @ 25°C*†	—
Absolute Accuracy, Voltage Input	—	0.1% Full Scale @ 25°C*†
Input Step Response, per Channel	70 ms @ Notch = 60 Hz (default) 80 ms @ Notch = 50 Hz 16 ms @ Notch = 250 Hz 8 ms @ Notch = 500 Hz	70 ms @ Notch = 60 Hz (default) 80 ms @ Notch = 50 Hz 16 ms @ Notch = 250 Hz 8 ms @ Notch = 500 Hz
Input Conversion Type	Delta Sigma	Delta Sigma
Bus Power Current (mA)	75	75
Power Dissipation, Max.	0.6 W @ 28.8VDC	0.6 W @ 28.8VDC

* Includes offset, gain, non-linearity and repeatability error terms.

† Analog input modules support these configurable parameters and diagnostics: open-wire with LED and electronic reporting; four-alarm and annunciation set-points; calibration mode and electronic reporting; under- and over-range and electronic reporting; channel signal range and update rate and on-board scaling; filter-type; channel update rate.

Analog Output Modules

	PSSTACM12A	PSSTAVM12A
Number of Outputs	2	2
Key switch Position	4	4
Output Signal Range	4…20 mA 0…20 mA	-10 to 10VDC 0 to 10VDC
Output Resolution, Bits	13 bits - over 21 mA 2.5 µA/cnt	14 bits (13 plus sign) 1.28 mV/cnt in unipolar or bipolar mode
Absolute Accuracy, Current Output	0.1% Full Scale @ 25°C*†	—
Absolute Accuracy, Voltage Output	—	0.1% Full Scale @ 25°C*†
Step Response to 63% of FS,	24 µs	— Current Output
Step Response to 63% of FS,	—	20 µs Voltage Output
Output Conversion Rate	16 µs	20 µs
Bus Power Current (mA)	75	75
Power Dissipation, Max.	1.0 W @ 28.8VDC	1.0 W @ 28.8VDC

* Includes offset, gain, non-linearity and repeatability error terms.

† Analog output modules support these configurable parameters and diagnostics: open-wire with LED and electronic reporting (PSSTACM12A only); fault mode; idle mode; alarms; channel signal range and on-board scaling.

Parker Hannifin Corporation
Pneumatic Division
Richland, Michigan
www.parker.com/pneumatics

www.comoso.com

Valve Driver Modules

The PSSV32A and PSSVM32A valve driver modules provide an interface between the Isysnet serial bus system and the valve assembly. These modules will always be the last on the Isysnet serial bus, and control 32 digital outputs at 24VDC. Depending on the valve selection, a valve driver module can control up to 32 single solenoid valves or 16 double solenoid valves.

PSSV32A is used with Isys ISO valves and PSSVM32A is used with Isys Micro valves.

Valve Driver Module Specifications

	PSSV32A and PSSVM32A
Outputs per Module	32, PNP sourcing
Voltage Drop, On-State Output, Maximum	0.2VDC
Voltage, Off-State Output, Maximum	28.8VDC
Voltage, On-State Output, Maximum Minimum Nominal	 28.8VDC 10VDC 24VDC
Output Current Rating	200 mA per channel, not to exceed 6.0 A per module
Output Surge Current, Maximum	0.5 A for 10 ms, repeatable every 3 seconds
Current Leakage, Off-State Output, Maximum	0.1 mA
Current, On-State Output Minimum	200 mA per channel
Output Delay Time OFF to ON, Maximum[1]	0.1 ms
Output Delay Time, ON to OFF, Maximum[1]	0.1 ms
External DC Power Supply Voltage Range	10 to 28.8VDC
External DC Power Supply Voltage Nominal	24VDC

1. OFF to ON or ON to OFF delay is time from a valid output “on” or “off” signal to output energization or de-energization.

Select the Appropriate Power Supply

Power Specifications

Part Number	Power Supply Input Voltage, Nom.	Operating Voltage Range	Maximum Continuous Current Draw	Power Supply Inrush Current, Max.	Input Overvoltage Protection	Power Supply Interruption Protection
PSSCDM12A	24VDC	10...28.8VDC	10 A	6 A for 10 ms	Reverse polarity protected	Output voltage will stay within specifications when input drops out for max. load.
PSSCDM18PA						
PSSCCNA						
PSSCENA						
PSSCPBA						
PSSSE24A						

Parker Hannifin Corporation
Pneumatic Division
Richland, Michigan
www.parker.com/pneumatics

www.comoso.com

Power Extender Module

The PSSSE24A expansion power unit passes 24VDC field power to the I/O modules to the right of it. This unit extends the backplane bus power and creates a new field voltage partition segment for driving field devices for up to 13 I/O modules. The expansion power unit separates field power from I/O modules to the left of the unit, effectively providing functional and logical partitioning for:

- Separating field power between input and output modules
- Separating field power to the analog and digital modules
- Grouping modules to perform a specific task or function

You can use multiple expansion power units with any of the communication adapters to assemble a full system. If you are using the PSSCDM12A adapter, you may use a PSSSE24A expansion power unit to add additional modules. For example, if you had a 36 module system with a PSSCDM12A adapter, you would have at least two or more PSSSE24A expansion power units to provide more bus power current for modules to the right of the supply.

- 1.3A of additional bus power
- Starts new voltage distribution
- Partitioning for E-Stop wiring

PSSSE24A Current Derating for Mounting

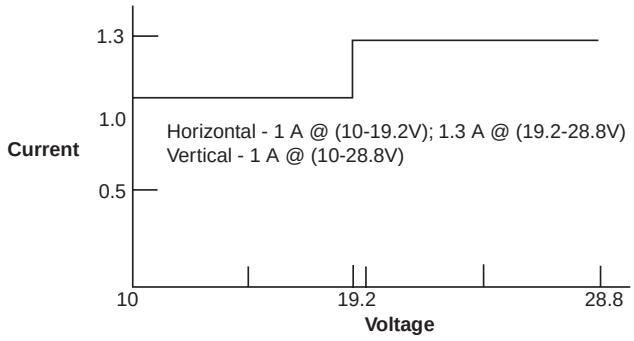

Power Distribution General Specifications

	PSSSE24A
Power Supply Requirements	Note: In order to comply with CE Low Voltage Directives (LVD), you must use a Safety Extra Low Voltage (SELV) or a Protected Extra Low Voltage (PELV) power supply to power this adapter
Field Side Power Requirements	24VDC (+20% = 28.8VDC max.) @ 400 mA
Inrush Current, Max.	6 A for 10 ms
Input Overvoltage Protection	Reverse polarity protected
Power Supply Interruption Protection	Output voltage will stay within specifications when input drops out for 10 ms at 10V with max. load
Power Supply Input Voltage, Nom.	24VDC
Operating Voltage Range	10…28.8VDC
Power Consumption, Max.	9.8 W @ 28.8VDC
Power Dissipation, Max.	3.0 W @ 28.8VDC
Thermal Dissipation, Max.	10.0 BTU/hr @ 28.8VDC
Isolation Voltage	1250V rms
Bus Power Supply Current, Max.	1.5 A
Field Power Supply Current, Max.	10 A

Parker Hannifin Corporation
Pneumatic Division
Richland, Michigan
www.parker.com/pneumatics

Power Distribution Options for Isys ISO

Isysnet Communication and I/O Modules

An auxiliary 24VDC power supply from the communication module provides power to the backplane bus power and I/O module field power. You can connect up to 13 I/O modules with a maximum of 10 A field power, using the auxiliary power.

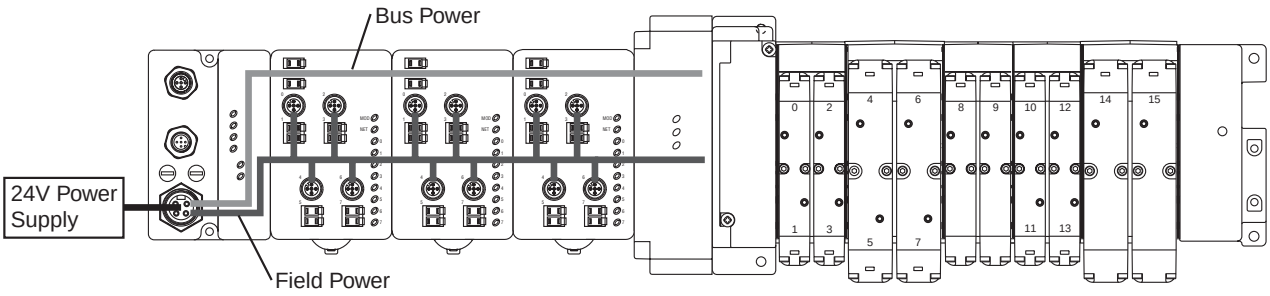

Isysnet System with 24VDC Expansion Power Unit (PSSSE24A)

The auxiliary power from the communication module supports up to 13 I/O modules with a maximum of 10 A field power. The 24VDC Power Extender Module (PSSSE24A) extends the backplane bus power and I/O Module field power to support up to 13 more I/O modules. Connect additional Power Extender Modules to expand the I/O assembly up to the maximum of 63 I/O modules. This secondary 24VDC connector on the PSSSE24A can be wired into an Emergency Stop circuit.

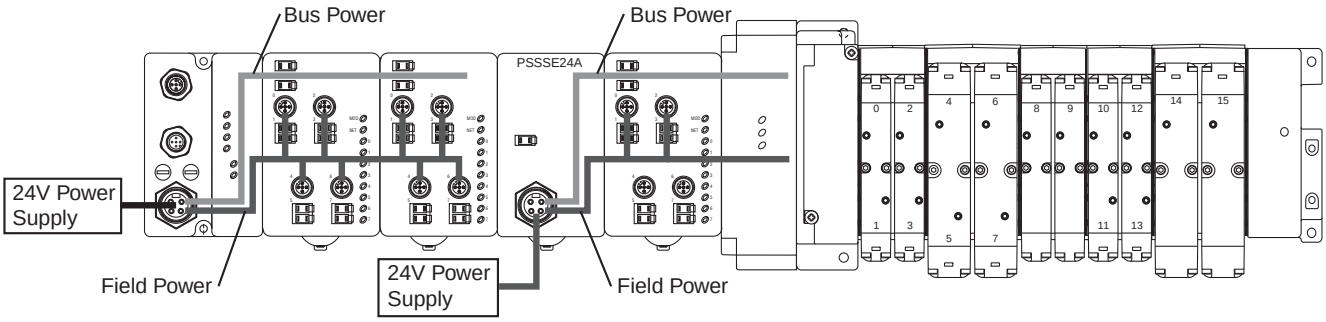

Parker Hannifin Corporation
Pneumatic Division
Richland, Michigan
www.parker.com/pneumatics

www.comoso.com

Power Distribution Options for Isys Micro

Isysnet Communication and I/O Modules

The 24VDC power supply from the communication module provides power to the backplane bus power and I/O module field power. You can connect up to 13 modules and an adapter with a maximum of 10 A field power, using this power source.

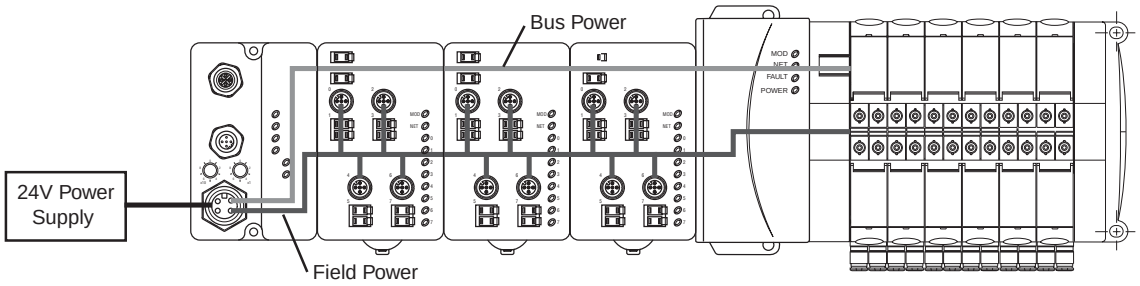

Isysnet Communication and I/O Modules

The 24VDC power supply from the communication module provides power to the backplane bus power and I/O module field power. You can connect up to 13 modules and an adapter with a maximum of 10 A field power, using this power source.

The 24VDC Power Extender Module (PSSSE24A) extends the backplane bus power and I/O module field power to support up to 13 more modules. Connect additional Power Extender Modules to expand the assembly up to the maximum of 63 I/O modules. The Valve Driver Module is the last module on the system, and will draw bus power and field power from the PSSSE24A to the left of it. This secondary 24VDC connector on the PSSSE24A can be wired into an Emergency Stop circuit.

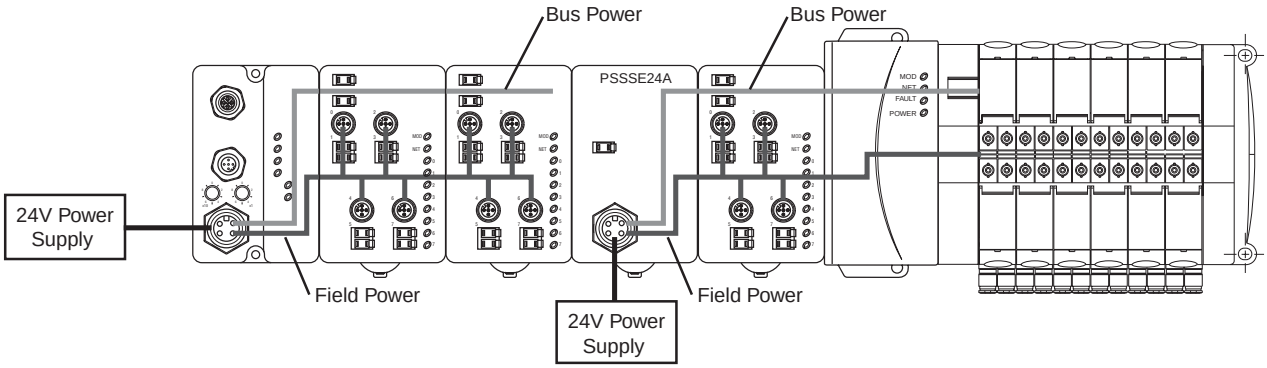

Isysnet Communication Module and Valve Driver Module with 24VDC Connector

The 24VDC power supply from the Communication Adaptor provides power to the backplane bus power and I/O module field power for up to 13 modules and an adapter with a maximum of 10 A Field Power. In this configuration, backplane bus power and I/O module field power are supplied to the input and output modules. The communication module only supplies backplane bus power to the Valve Driver Module, as the Isys Micro with 24VDC Connector separates the field power from the rest of the network. This secondary 24VDC Connector on the Valve Driver Module supplies Field Power to the valves, and can be wired into an Emergency Stop Circuit.

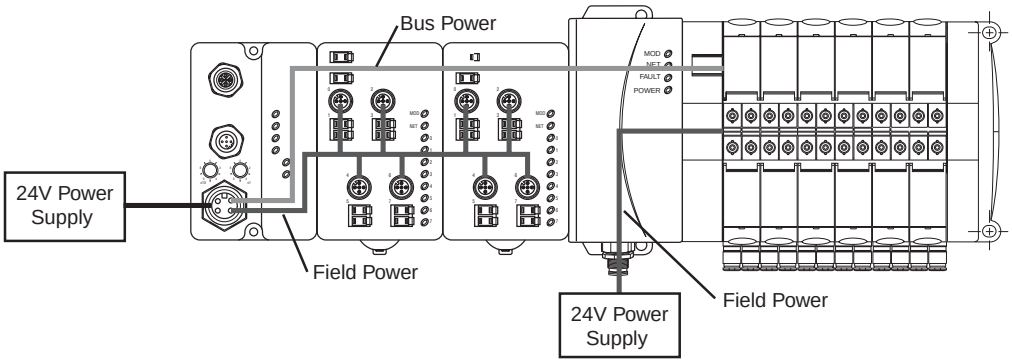

Parker Hannifin Corporation
Pneumatic Division
Richland, Michigan
www.parker.com/pneumatics

www.comoso.com

Power Distribution Options for Isys Micro (Continued)

Isysnet Communication Module with Bus Extension Connector and I/O Modules

The 24VDC power supply from the communication module provides power to the backplane bus power and I/O module field power. You can connect up to 13 modules and an adapter with a maximum of 10 A field power, using this power source. The Isys Micro with Bus Extension Connector carries backplane bus power and communication down to another Isysnet Assembly through the PSSVEXT1 cable. If additional Isysnet Input and Output Modules or Isys ISO valve manifold is used on this extension, a PSSSE24A Power Extender Module is required to provide Field Power. If the extension is attached directly to an Isys Micro Manifold, Field Power can be supplied directly by using the 24VDC Connector option.

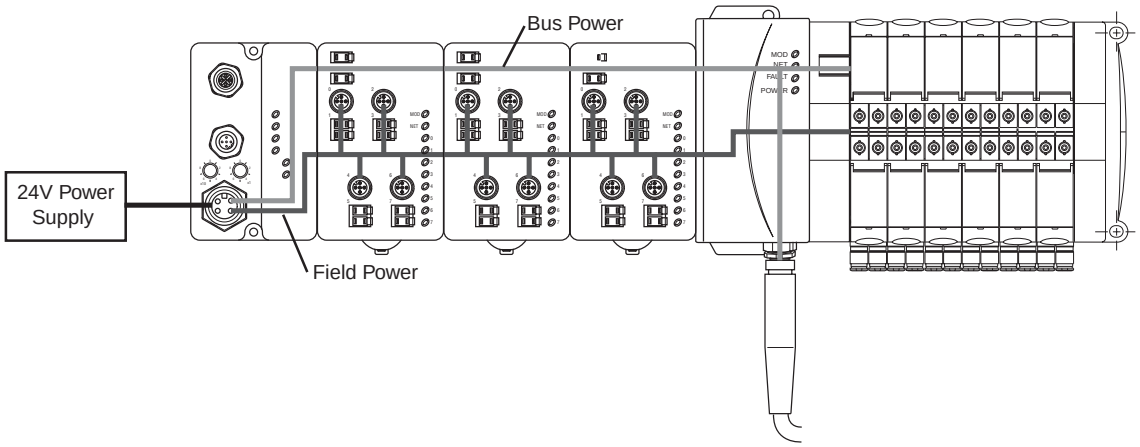

Isysnet Communication Module with 24VDC and Bus Extension Connectors and I/O Modules

The 24VDC power supply from the communication module provides power to the backplane bus power and I/O module field power. In this configuration, bus power and field power are supplied to the input and output modules. The communication module only supplies bus power to the Valve Driver Module, as the 24VDC Connector separates the Field Power from the rest of the network. This secondary 24VDC connector on the Valve Driver Module supplies field power to the valves, and can be wired into an Emergency Stop Circuit. The Bus Extension Connector carries bus power and communication down to another Isysnet Assembly through the PSSVEXT1 cable. If additional Isysnet input and output modules or Isys ISO valve manifold is used on this extension, a PSSSE24A Power Extender Module is required to provide field power. If the extension is attached directly to an Isys Micro Manifold with 24VDC Connector, field power can be supplied directly by using the 24VDC Connector option.

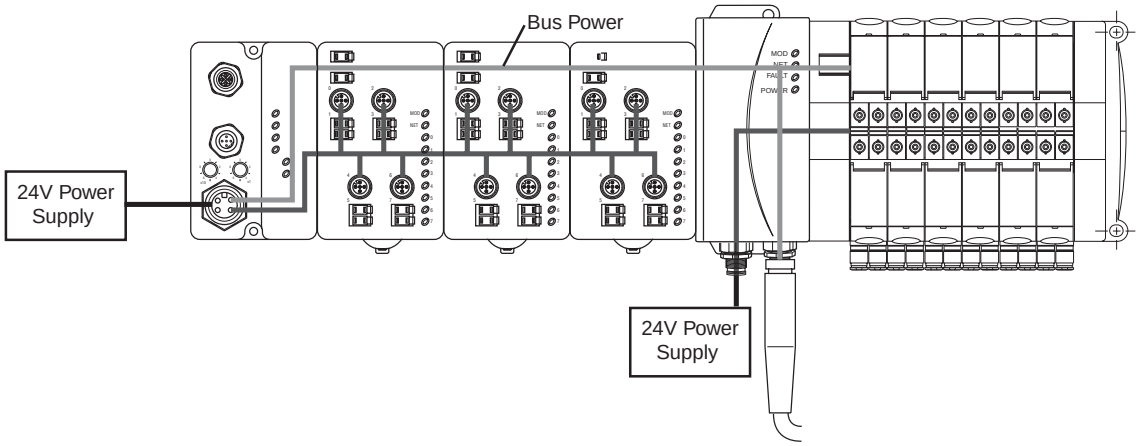

Parker Hannifin Corporation
Pneumatic Division
Richland, Michigan
www.parker.com/pneumatics

www.comoso.com

Placing Isysnet Modules

Maximum Size Layout

Part Number	Bus Power Supply	Maximum I/O Modules with 24VDC Backplane Current at 75 mA each	Maximum I/O Modules with Expansion Power Supplies
PSSCDM12A on DeviceNet	1000	Up to 13	63
PSSCDM18PA on DeviceNet			
PSSCCNA on ControlNet			
PSSCENA on EtherNet/IP			
PSSCPBA on PROFIBUS			
PSSSE24A Expansion Power	Horizontal mounting: 1A@ 10...19.2V input; 1.3A @ 19.2...28.8V input Vertical mounting: 1A @ 10...28.8V input		

Power Supply Distance Rating

Modules are placed to the right of the power supply. Each Isysnet module can be placed in any of the slots to the right of the power supply until the usable backplane current of that supply has been exhausted. A Communication Module provides 1 A current to the PointBus. The Power Extend Module, PSSSE24A, provides up to 1.3 A and I/O modules require from 75 mA (typical for the digital and analog I/O modules) up to 90 mA or more.

Current Requirements

Part Number	PointBus Current Requirements
PSSN8xxx	75 mA
PSSP8xxx	
PSST8xxx	
PSSN16xxx	
PSST16xxx	
PSSTR4MRA	90 mA
PSSNACM12A	75 mA
PSSTACM12A	
PSSNAVM12A	
PSSTAVM12A	
PSSV32A	
PSSVM32A	

Parker Hannifin Corporation
Pneumatic Division
Richland, Michigan
www.parker.com/pneumatics

www.comoso.com

Related Documentation

Additional user documentation presents information according to the tasks you perform and the programming environment you use. Refer to the table below for information on Isysnet products.

Isysnet Related Publications*

	Part Number	Description	Instruction Sheet*
General Information	—	Industrial Automation Wiring and Grounding Guidelines	E115P
		Safety Guidelines for the Application, Installation and Maintenance of Solid State Control	E116P
Communication Interfaces	PSSCDM12A	Isysnet DeviceNet Adapter Module, Drop or Pass-through, with male and female M12 connectors	E101P, Installation Instructions PSS-UM001, User Manual
	PSSCDM18PA	Isysnet DeviceNet Adapter Module, Drop or Pass-through, with male and female M18 connectors	
	PSSCCNA	Isysnet Redundant ControlNet Adapter Module	E103P, Installation Instructions
	PSSCENA	Isysnet Ethernet/IP 10/100 Mbps Adapter Module	E104P, Installation Instructions
	PSSCPBA	Isysnet PROFIBUS Adapter Module	E102P, Installation Instructions
Valve Driver Module	PSSV32A, PSSVM32A	32 Point Valve Driver Module	E100P
DC I/O	PSSN16M12A	24VDC 16 Sink Input w/8 M12 connectors, 2 points per connector	E106P
	PSSN8M8A	24VDC 8 Sink Input w/8 M8 connectors	
	PSSN8M12A	24VDC 8 Sink Input w/4 M12 connectors, 2 points per connector	
	PSSN8M23A	24VDC 8 Sink Input w/1 M23 connector	
	PSSP8M8A	24VDC 8 Source Input w/8 M8 connectors	
	PSSP8M12A	24VDC 8 Source Input w/4 M12 connectors, 2 points per connector	
	PSSP8M23A	24VDC 8 Source Input w/1 M23 connectors	
	PSST16M23A	24VDC 16 Source Output w/1 M23	E107P
	PSST16D25A	24VDC 16 Source Output w/1 25-Pin, D-Sub	
	PSST16M12A	24VDC 16 Source Output w/8 M12	
	PSST8M8A	24VDC 8 Source Output w/1 M23	
	PSST8M12A	24VDC 8 Source Output w/4 M12	
	PSST8M23A	24VDC 8 Source Output w/8 M8	
Analog	PSSNACM12A	24VDC Analog Current Input w/ 2 M12 connectors	E110P
	PSSNAVM12A	24VDC 2 Analog Voltage Input w/ 2 M12 connectors	
	PSSTACM12A	24VDC Analog Current Output w/ 2 M12 connectors	E111P
	PSSTAVM12A	24VDC Analog Voltage Output w/ 2 M12 connectors	
Power Unit	PSSSE24A	24VDC Expansion Power Supply	E105P
Relay Output	PSSTR4M12A	4 From A isolated (normally open) electromechanical relays	E109P

* Publications are electronic versions only. To make copies of these publications, go to: **http://www.parker.com/pneu/Isysnet**

Parker Hannifin Corporation
Pneumatic Division
Richland, Michigan
www.parker.com/pneumatics

www.comoso.com

The Turck Fieldbus System

Isysnet has four major components:

- **Valve driver module** provide control for either 16 or 32 solenoids on a manifold
- **I/O modules** provide the field interface and system-interface circuitry
- **Communication modules** provide the network-interface circuitry
- **Power distribution module** provide 5 additional power inputs to the Turck system

Turck Features

- Highly modular design (4pt – 16pt modularity)
- Broad application coverage
- Channel-level diagnostics (LED and electronic)
- Channel-level alarm and annunciation (electronic)
- Channel-level open-wire detection with electronic feedback
- Channel-level short-circuit detection with electronic feedback
- Horizontal and vertical mounting without derating
- 5g vibration
- Electronic and mechanical keying
- Robust backplane design
- Quick-disconnects for I/O and network connectivity
- Built-in panel grounding
- Color-coded module labels
- UL, C-UL, and CE certifications (as marked)
- Highly reliable structural integrity
- Optical isolation between field and system circuits

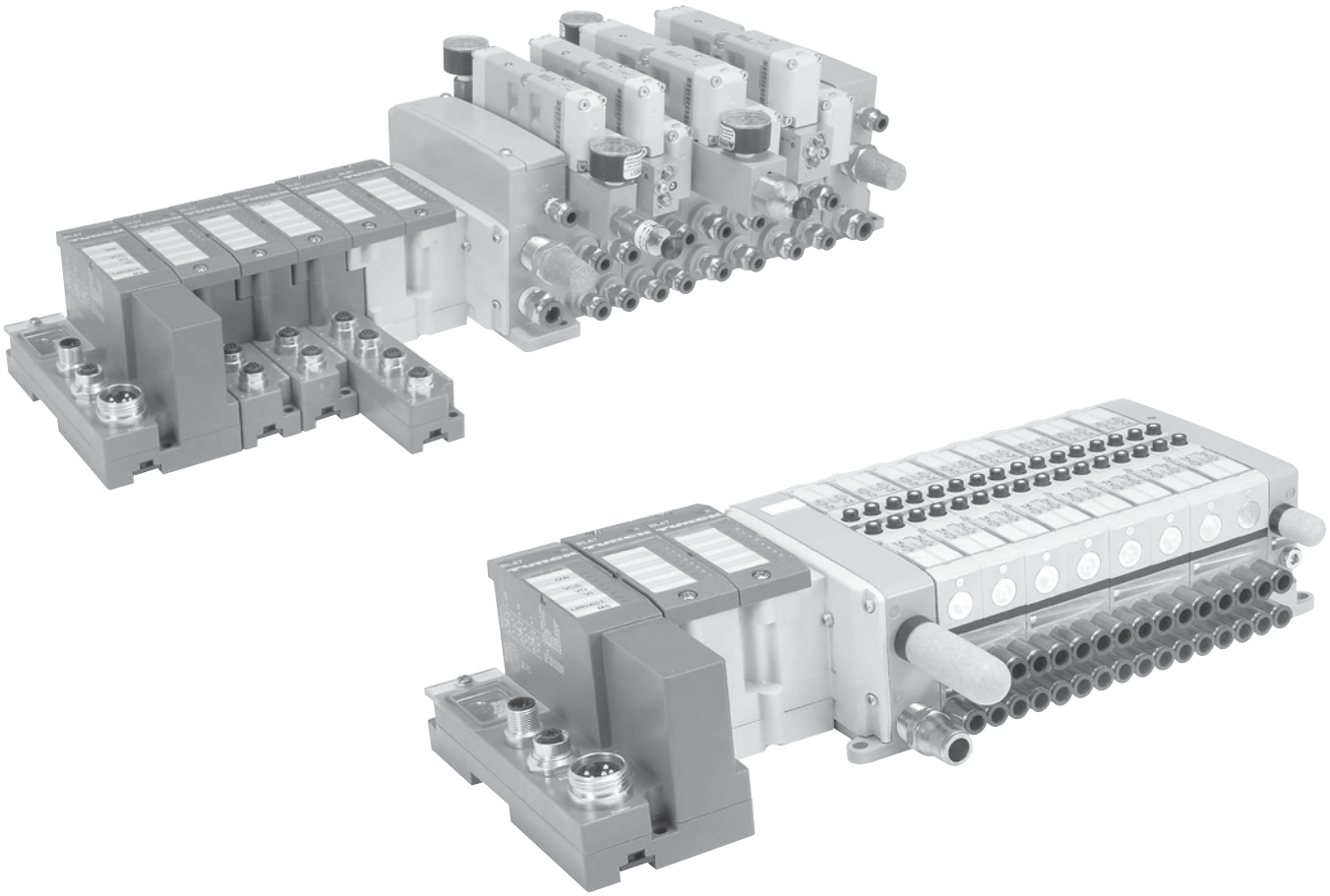

Parker Hannifin Corporation
Pneumatic Division
Richland, Michigan
www.parker.com/pneumatics

www.comoso.com

Turck Fieldbus System

- A complete fieldbus communication offering for all Isys ISO and Isys Micro valves.
- CSA, C-US and CE certifications (as marked).

DeviceNet™
EtherNet/IP™
PROFIBUS
PROFINET
Modbus/TCP™
CANopen

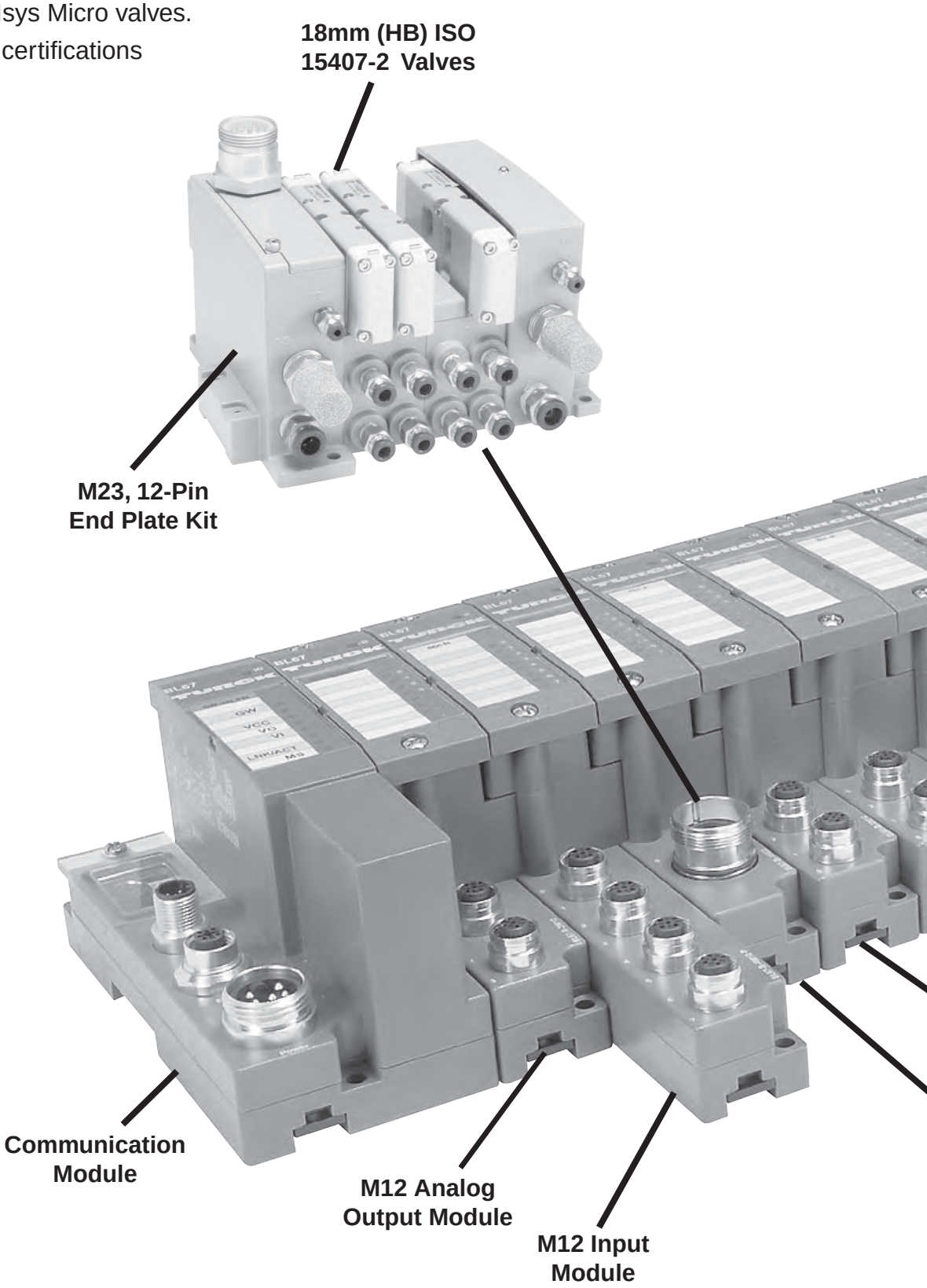

Parker Hannifin Corporation
Pneumatic Division
Richland, Michigan
www.parker.com/pneumatics

www.comoso.com

I/O Configuration

- Centralized Turck Fieldbus system.
- Pneumatics and I/O are in close proximity with one another.
- M23, 12-Pin or 19-Pin output extension to an additional Isys valve island.
- I/O density per module = 4, 8 or 16.

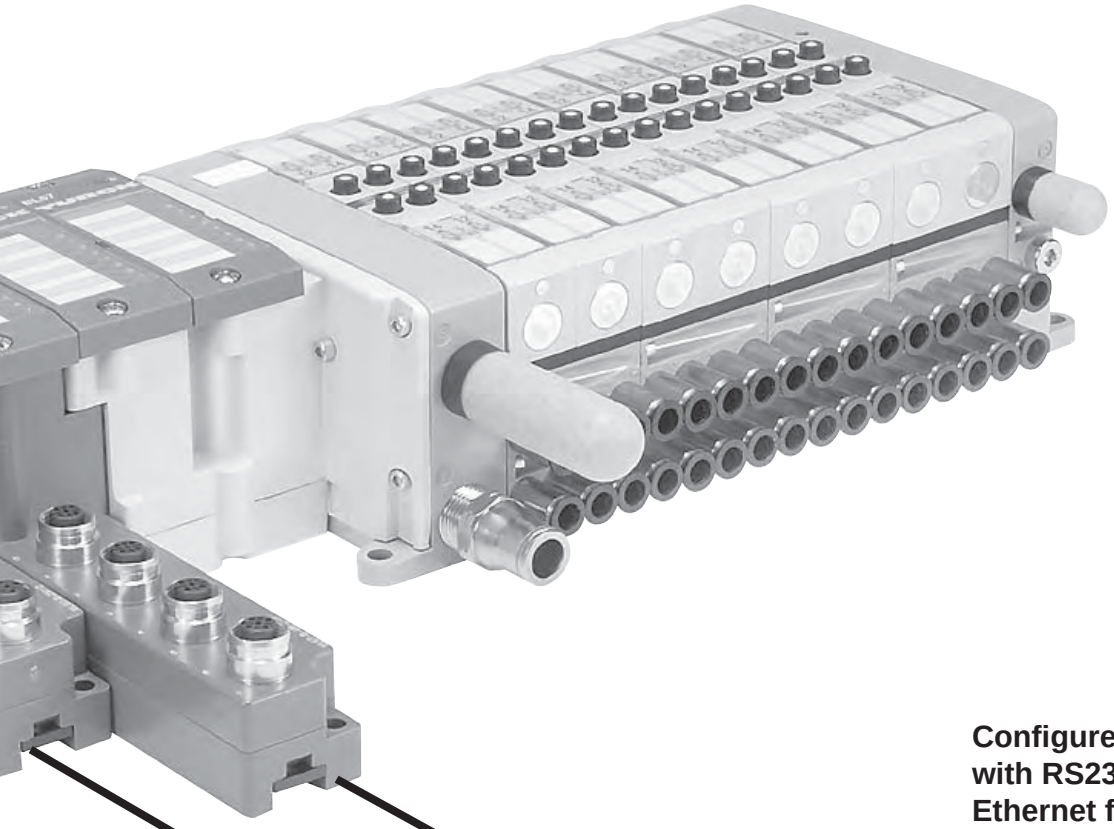

Configure / Program any module with RS232, or directly through Ethernet for any module with an Ethernet physical layer.

Parker Hannifin Corporation
Pneumatic Division
Richland, Michigan
www.parker.com/pneumatics

www.comoso.com

Turck Fieldbus System

- A complete fieldbus communication offering for all Isys ISO and Isys Micro valves.
- CSA, C-US and CE certifications (as marked).

DeviceNet™
EtherNet/IP™
PROFIBUS
PROFINET
Modbus/TCP™
CANopen

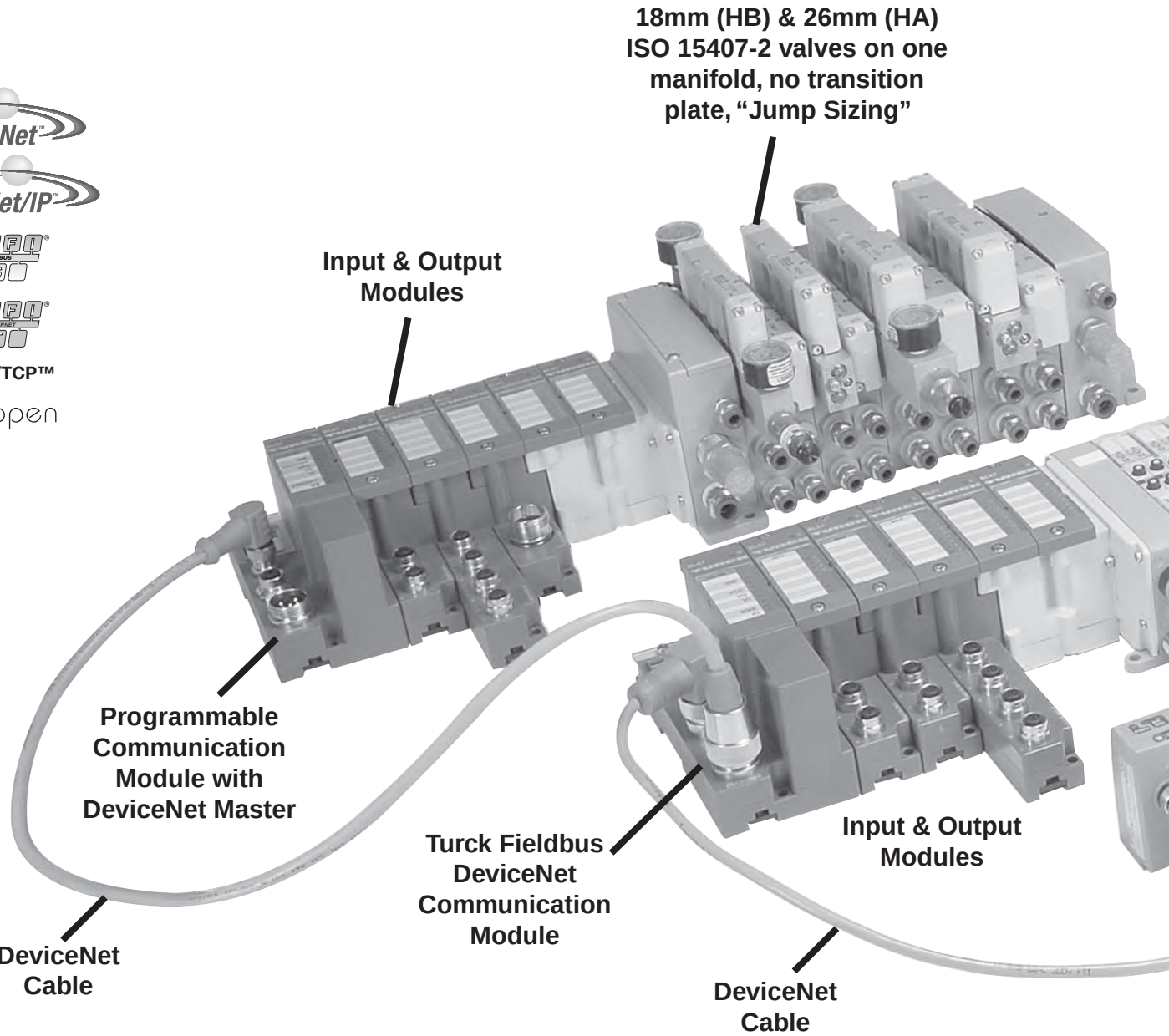

Parker Hannifin Corporation
Pneumatic Division
Richland, Michigan
www.parker.com/pneumatics

www.comoso.com

I/O Configuration

- Complete control of all I/O and valves with stand alone control.
- Additional I/O and valves connected over DeviceNet with BL Remote Subnet.
- BL Remote connection to Moduflex and Turck fieldbus DeviceNet equipped communication modules.
- I/O density per module = 4, 8 or 16.

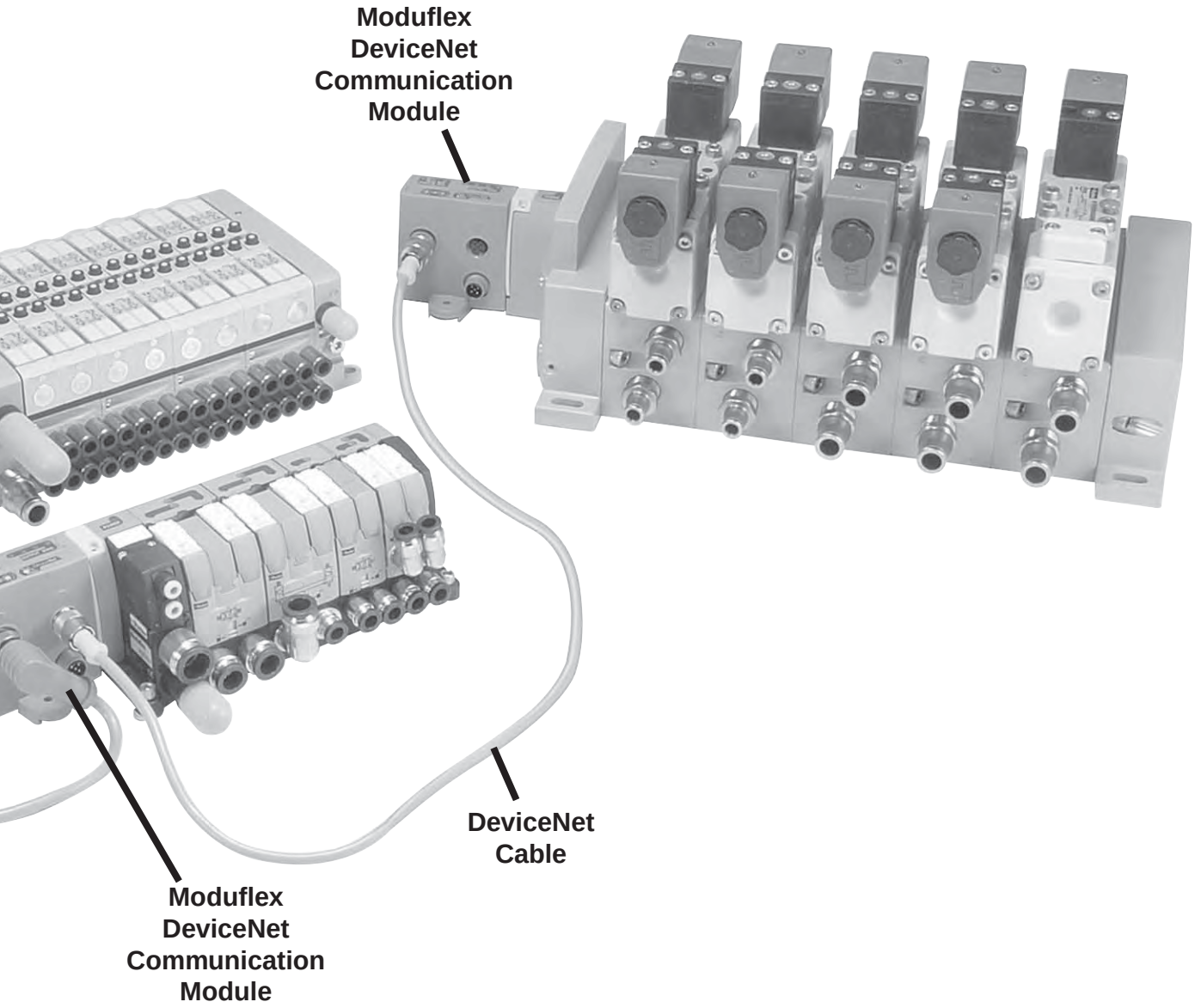

Parker Hannifin Corporation
Pneumatic Division
Richland, Michigan
www.parker.com/pneumatics

www.comoso.com

Communications Module

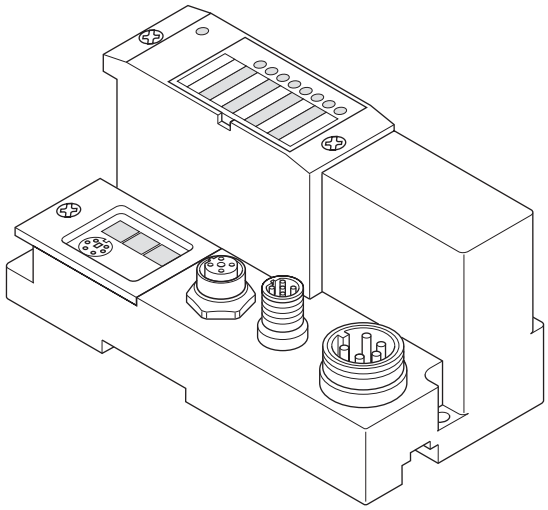

BL67 communication modules are the heart of a BL67 station. They are designed to connect the modular fieldbus nodes to the higher level fieldbus (PROFIBUS-DP, DeviceNet™, CANopen, Ethernet).

All BL67 electronic modules communicate over the internal module bus with the communication modules. The communication module structures the data and sends them clustered via fieldbus nodes to the higher control system.

This way all I/O modules can be configured independently of the fieldbus system.

Electronic Module

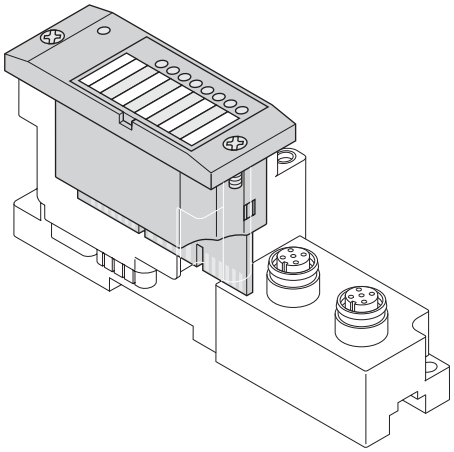

BL67 electronic modules are inserted into the passive base modules from above and then simply affixed with two screws. Maintenance is extremely simplified due to the separation of connection level and module electronics.

Moreover, flexibility is enhanced because the base modules provide different types of connectors. Voltage supply for the electronic modules is either provided via the communication modules or a Power Extender module. Power Extender modules can be used to create galvanically isolated potential groups.

Base Module

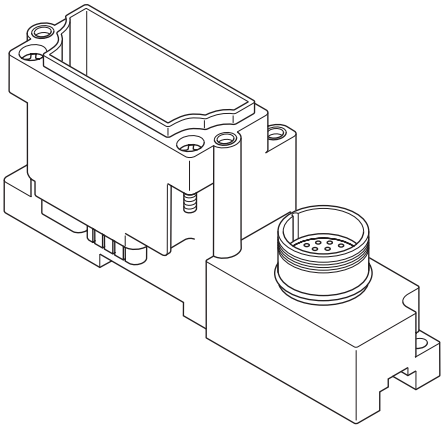

BL67 base modules are aligned one by one to the right of the communication module and are tightened each with two screws, either with the communication modules or with the previous module. A DIN rail is not required. This way a compact and stable unit is created which can be mounted directly on the machine.

The base modules serve for connection of the field devices an are available with different connection types (M8, M12, M23 and 7/8).

Parker Hannifin Corporation
Pneumatic Division
Richland, Michigan
www.parker.com/pneumatics

www.comoso.com

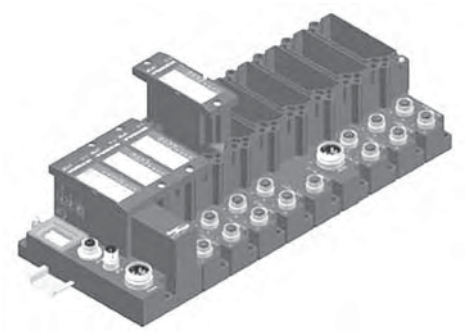

A BL67 system can be extended to a total length of 1 m, comprising of a communication module for PROFIBUS-DP, DeviceNet™/ CANopen or Ethernet and a maximum of 32 modules.

Maximum System Extension PROFIBUS-DP, DeviceNet™ , CANopen

	PROFIBUS		DeviceNet		CANopen	
Module type	**Number of chan.**	**Number of mod.**	**Number of chan.**	**Number of mod.**	**Number of chan.**	**Number of mod.**
Digital inputs, 4 DI	128	32	128	32	128	32
Digital inputs, 8 DI	256	32	256	32	256	32
Digital outputs, 4 DO	128	32	128	32	128	32
Digital outputs, 8 DO	256	32	256	32	256	32
Digital outputs, 16 DO	512	32	512	32	512	32
Analog inputs, 2AI	64	32	64	32	64	32
Analog inputs, 4AI	112	28	124	31	124	31
Analog inputs, 2 AI-PT	56	28	64	32	64	32
Analog inputs, 2 AI-TC	64	32	64	32	64	32
Analog outputs, 2 AO-I	38	19	64	32	64	32
Analog outputs, 2 AO-V	38	19	50	25	50	25

System supply: The power supply for the BL67 system is either derived separately for PROFIBUSDP and Ethernet communication modules or directly from the DeviceNet™ / CANopen cable for the DeviceNet™ / CANopen communication module.

Power Extender modules can be inserted anywhere in the BL67 station. They provide isolated field voltage for the I/O modules mounted to their right.

Thus Power Extender modules can also be used to create different potential groups.

Maximum System Extension EtherNet Based Protocols

	ModbusTCP		EtherNet/IP		PROFIBUS	
Module type	**Number of chan.**	**Number of mod.**	**Number of chan.**	**Number of mod.**	**Number of chan.**	**Number of mod.**
Digital inputs, 4 DI	128	32	128	32	128	32
Digital inputs, 8 DI	256	32	256	32	256	32
Digital outputs, 4 DO	128	32	128	32	128	32
Digital outputs, 8 DO	256	32	256	32	256	32
Digital outputs, 16 DO	512	32	512	32	512	32
Analog inputs, 2AI	64	32	64	32	64	32
Analog inputs, 4AI	128	32	128	32	128	32
Analog inputs, 2 AI-PT	64	32	64	32	64	32
Analog inputs, 2 AI-TC	64	32	64	32	64	32
Analog outputs, 2 AO-I	64	32	64	32	64	32
Analog outputs, 2 AO-V	50	25	50	25	50	25

Parker Hannifin Corporation
Pneumatic Division
Richland, Michigan
www.parker.com/pneumatics

www.comoso.com

BL67-GW-DN

DeviceNet Communication Module with Power over the Network

BL67-GW-CO-T

CANopen Communication Module with Power over the Network

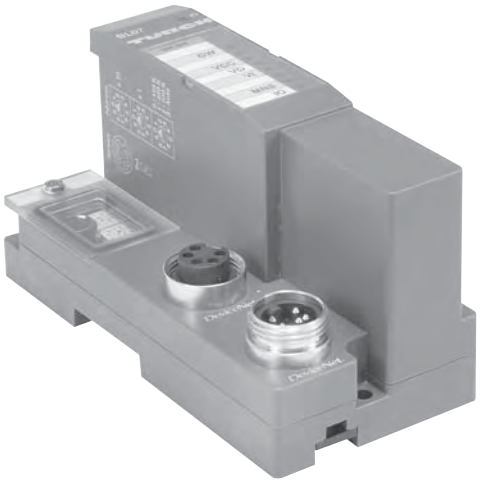

7/8 Mini bus In wiring,
view into male connector

1 = Shield
2 = RD (V +)
3 = BK (V -)
4 = WH (CAN H)
5 = BU (CAN L)

7/8 Mini bus out wiring,
view into female connector

1 = Shield
2 = RD (V +)
3 = BK (V -)
4 = WH (CAN H)
5 = BU (CAN L)

Turck Fieldbus System with up to 256 inputs, outputs, and 32 solenoids per Isys Micro or Isys ISO manifold. Digital inputs / outputs, analog inputs / outputs, serial interface, and counter modules are available. DeviceNet communication speeds selectable between 120, 250, 500 kbps, and CANopen communication speeds are selectable between 10 kbps up to 1 Mbps. Addressing for either module can be selected via rotary switches or set through software.

With the Power over the Network feature, it is only necessary to connect one cable to the communication module. For networks requiring additional power, a Bus Power Tee can be installed to combine separate network and power feeds into the communication module. See the Cables and Cordsets section for additional information.

BL67-GW-CO

CANopen Communication Module

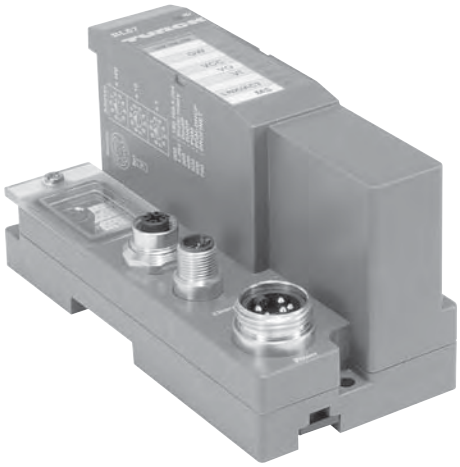

M12 A-code bus out Wiring,
view into female connector

1 = Shield
2 = RD (V +)
3 = BK (V -)
4 = WH (CAN H)
5 = BU (CAN L)

M12 A-code bus In Wiring,
view into male connector

1 = Shield
2 = RD (V +)
3 = BK (V -)
4 = WH (CAN H)
5 = BU (CAN L)

7/8 Mini Power in wiring,
view into male connector

1 = GND
2 = GND
3 = PE
4 = V_i
5 = V_o

Turck Fieldbus System with up to 256 inputs, outputs, and 32 solenoids per Isys Micro or Isys ISO manifold. Digital inputs / outputs, analog inputs / outputs, serial interface, and counter modules are available. CANopen communication speeds are selectable between 10 kbps up to 1 Mbps, and addressing can be selected via rotary switches or set through software.

Parker Hannifin Corporation
Pneumatic Division
Richland, Michigan
www.parker.com/pneumatics

www.comoso.com

BL67-GW-DPV1

Profibus Communication Module

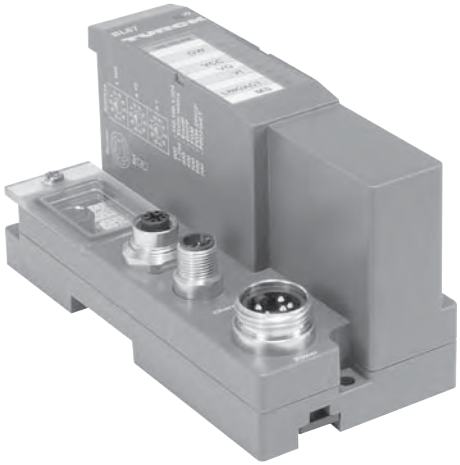

M12 B-code bus out Wiring,
view into female connector

1 = 5 VDC
2 = GN (Bus A)
3 = GND
4 = RD (Bus B)
5 = Shield

M12 B-code bus In Wiring,
view into male connector

1 = n.c.
2 = GN (Bus A)
3 = n.c.
4 = RD (Bus B)
5 = Shield

7/8 Mini Power in wiring,
view into male connector

1 = GND
2 = GND
3 = PE
4 = V_i
5 = V_o

Turck Fieldbus System with up to 256 inputs, outputs, and 32 solenoids per Isys Micro or Isys ISO manifold. Digital inputs / outputs, analog inputs / outputs, serial interface, and counter modules are available. Profibus communication speeds are selectable between 9.6 kbps up to 12 Mbps, and addressing can be selected via rotary switches or set through software.

BL67-GW-EN

Modbus / TCP Communication Module

BL67-GW-EN-IP

Ethernet / IP Communication Module

BL67-GW-EN-PN

Profinet Communication Module

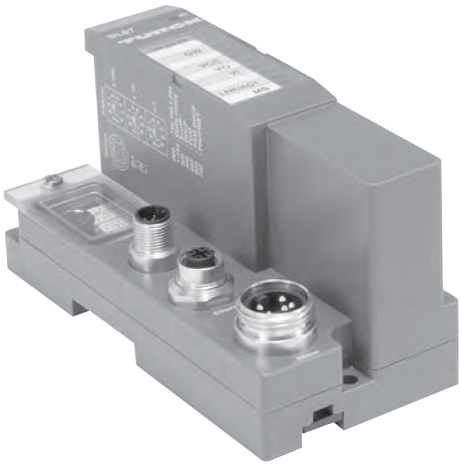

M12 D-code
Ethernet in Wiring,
view into female connector

1 = YE (TX+)
2 = WH (RX+)
3 = OG (TX-)
4 = BU (RX-)

7/8 Mini Power in wiring,
view into male connector

1 = GND
2 = GND
3 = PE
4 = V_i
5 = V_o

Turck Fieldbus System with up to 256 inputs, outputs, and 32 solenoids per Isys Micro or Isys ISO manifold. Digital inputs / outputs, analog inputs / outputs, serial interface, and counter modules are available. Communication speeds of 10/100 Mbps, and addressing can be selected via rotary switches, BOOTP, DHCP, or through software.

Parker Hannifin Corporation
Pneumatic Division
Richland, Michigan
www.parker.com/pneumatics

www.comoso.com

BL67-GW-EN-DN

Modbus / TCP Communication Module with DeviceNet Subnet

BL67-GW-EN-IP-DN

Ethernet / IP Communication Module with DeviceNet Subnet

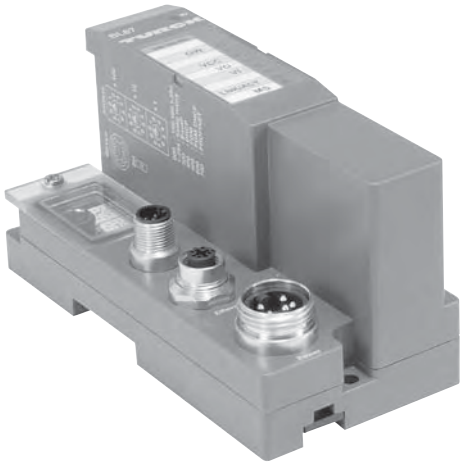

DeviceNet OUT

1 = Shield
2 = RD (V +)
3 = BK (V -)
4 = WH (CAN H)
5 = BU (CAN L)

M12 D-code
Ethernet in Wiring,
view into female connector

1 = YE (TX+)
2 = WH (RX+)
3 = OG (TX-)
4 = BU (RX-)

7/8 Mini Power in wiring,
view into male connector

1 = GND
2 = GND
3 = PE
4 = V_i
5 = V_o

With BL Remote DeviceNet Subnet functionality, each communication module has its own DeviceNet master which provides a connection for 63 DeviceNet nodes with additional inputs, outputs, and solenoid control. BL Remote DeviceNet Subnet is independent of the main fieldbus network, and is not visible to the master PLC.

BL67-PG-DP

Profibus Programmable Communication Module

BL67-PG-EN

Modbus / TCP Programmable Communication Module

BL67-PG-EN-IP

Ethernet / IP Programmable Communication Module

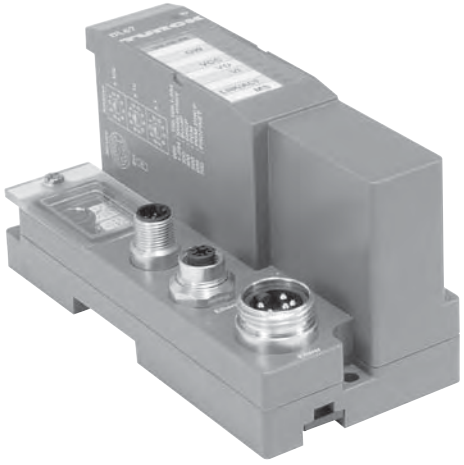

Profibus Wiring

M12 B-code bus out Wiring,
view into female connector

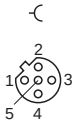

1 = 5 VDC
2 = GN (Bus A)
3 = GND
4 = RD (Bus B)
5 = Shield

M12 B-code bus in Wiring,
view into female connector

1 = n.c.
2 = GN (Bus A)
3 = n.c.
4 = RD (Bus B)
5 = Shield

Ethernet Wiring

M12 D-code
Ethernet in Wiring,
view into female connector

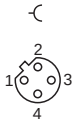

1 = YE (TX+)
2 = WH (RX+)
3 = OG (TX-)
4 = BU (RX-)

7/8 Mini Power in wiring,
view into male connector
Common to modules

1 = GND
2 = GND
3 = PE
4 = V_i
5 = V_o

Communication modules are equipped with a built in standalone controller which is programmed according to IEC61131-3 with CoDeSys. Each module has 512KB Program memory with 32 bit RISC processor, and can run 1000 instructions in less than 1 ms. These fieldbus equipped modules are optimized to interface with PLC's with fieldbus capability or act as standalone controllers that need to interface with other fieldbus equipped devices.

Parker Hannifin Corporation
Pneumatic Division
Richland, Michigan
www.parker.com/pneumatics

www.comoso.com

BL67-PG-EN-DN

Modbus / TCP Programmable Communication Module with DeviceNet Subnet

BL67-PG-EN-IP-DN

Ethernet / IP Programmable Communication Module with DeviceNet Subnet

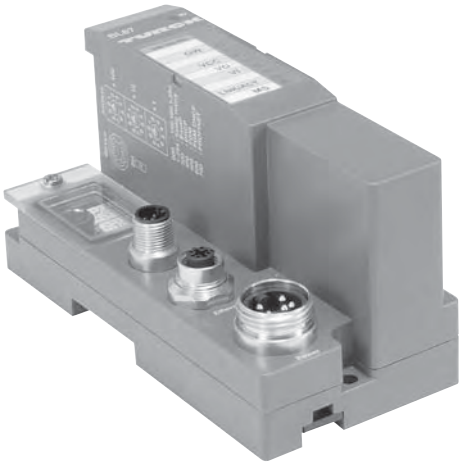

DeviceNet OUT

1 = Shield
2 = RD (V +)
3 = BK (V -)
4 = WH (CAN H)
5 = BU (CAN L)

M12 D-code
Ethernet in Wiring,
view into female connector

1 = YE (TX+)
2 = WH (RX+)
3 = OG (TX-)
4 = BU (RX-)

7/8 Mini Power in wiring,
view into male connector

1 = GND
2 = GND
3 = PE
4 = V_i
5 = V_o

Communication modules are equipped with a built in standalone controller which is programmed according to IEC61131-3 with CoDeSys. Each module has 512KB Program memory with 32 bit RISC processor, and can run 1000 instructions in less than 1 ms. These fieldbus equipped modules are optimized to interface with PLC's with fieldbus capability or act as standalone controllers that need to interface with other fieldbus equipped devices.

With BL Remote DeviceNet Subnet functionality, each communication module has its own DeviceNet master which provides a connection for 63 DeviceNet nodes with additional inputs, outputs, and solenoid control. BL Remote DeviceNet Subnet is independent of the main fieldbus network, and is not visible to the master PLC.

Parker Hannifin Corporation
Pneumatic Division
Richland, Michigan
www.parker.com/pneumatics

www.comoso.com

	Base Modules												
	BL67-B-4M8	BL67-B-8M8	BL67-B-1M12	BL67-B-1M12-8	BL67-B-2M12	BL67-B-2M12-P	BL67-B-4M12	BL67-B-4M12-P	BL67-B-1M23	BL67-B-1M23-19	BL67-B-1RSM	BL67-B-1RSM-4	BL67-1RSM-VO
Power Extender Modules													
BL67-PF-24VDC											✔	✔	✔
Digital Input Modules													
BL67-4DI-P	✔				✔	✔	✔		✔				
BL67-8DI-P		✔					✔	✔	✔				
BL67-4DI-PD	✔				✔	✔	✔		✔				
BL67-8DI-PD		✔					✔	✔	✔				
BL67-4DI-N	✔				✔	✔	✔		✔				
BL67-8DI-N		✔					✔	✔	✔				
Digital Output Modules													
BL67-4DO-0.5A-P	✔				✔	✔	✔		✔				
BL67-4DO-2A-P	✔				✔	✔	✔		✔				
BL67-8DO-0.5A-P		✔					✔	✔	✔				
BL67-16DO-0.1A-P										✔			
BL67-4DO-2A-N	✔				✔	✔	✔		✔				
BL67-8DO-0.5A-N		✔					✔	✔	✔				
Relay Output Modules													
BL67-8DO-R-NO								✔					
Digital Input / Output Modules													
BL67-4DI4DO-PD		✔					✔	✔	✔				
Configurable Digital Input / Output Modules													
BL67-8XSG-PD		✔					✔	✔	✔				
Analog Input Modules													
BL67-2AI-I					✔								
BL67-2AI-V					✔								
BL67-4AI-V/I							✔						
BL67-2AI-PT					✔								
BL67-2AI-TC					✔								
Analog Output Modules													
BL67-2AO-I					✔								
BL67-2AO-V					✔								
Technology Modules													
BL67-1RS232			✔	✔					✔				
BL67-1RS485/422			✔	✔					✔				
BL67-1SSI				✔					✔				
BL67-1CNT/ENC				✔					✔				
BL67-1CVI			✔										
***BL Ident*® RFID Modules**													
BL67-2RFID-A					✔								
BL67-2RFID-C					✔								

Parker Hannifin Corporation
Pneumatic Division
Richland, Michigan
www.parker.com/pneumatics

www.comoso.com

System Supply via the Module Bus

The number of BL67 modules that can be powered by the communication module, depends on the nominal current draw of all the modules in the system. The total bus power current consumption of the installed BL67 modules may not exceed 1.5 A. The total field power current for inputs may not exceed 4 A, and the total field power for outputs may not exceed 8 A for DeviceNet and CANopen with power over the network, or 10A for all other communication modules.

When using the software PACTware, the menu item <Station - Verify> will automatically generate an error message if the system supply via the module bus is not reliably ensured.

Nominal Current Consumption

The following table shows the nominal current consumption of the various BL67 modules:

Modules	Bus Power Current (mA)	Field Power for Inputs[1] (mA)	Field Power for Outputs (mA)
PROFIBUS-DP Communication Module	0		150
DeviceNet™ Communication Module	0		150
CANopen Communication Module	0		150
Ethernet Communication Module	0		150
Valve Driver with 16 Outputs	30		< 109 mA (Plus Load Current)
Valve Driver with 32 Outputs	60		< 218 mA (Plus Load Current)
BL67-PF-24VDC	30		9
BL67-4DI-P	30	< 49 mA	
BL67-4DI-N	30	< 10 mA	
BL67-4DI-PD	30	< 109 mA	
BL67-8DI-P	30	< 49 mA	
BL67-8DI-N	30	< 10 mA	
BL67-8-DI-PD	30	< 109 mA	
BL67-4DO-0.5A-P	30		< 109 mA (Plus Load Current)
BL67-4DO-2A-P	30		< 109 mA (Plus Load Current)
BL67-4DO-2A-N	30		< 109 mA (Plus Load Current)
BL67-8DO-0.5A-P	30		< 109 mA (Plus Load Current)
BL67-8DO-0.5A-N	30		< 109 mA (Plus Load Current)
BL67-16DO-0.1A-P	30		< 109 mA (Plus Load Current)
BL67-4DI4DO-PD	30		< 109 mA (Plus Load Current)
BL67-8XSG-PD	30		< 109 mA (Plus Load Current)
BL67-8DO-R-NO	30		< 109 mA (Plus Load Current)
BL67-2AI-V	35	< 22 mA	
BL67-2AI-I	35	< 22 mA	
BL67-4AI-I/V	35	< 22 mA	
BL67-2AI-TC	35	< 40 mA	
BL67-2AI-PT	45	< 58 mA	
BL67-2AO-I	40		< 62 mA
BL67-2AO-V	60		< 67 mA
BL67-1RS232	140	< 90 mA	
BL67-1RS485/422	60	< 42 mA	
BL67-1SSI	50	< 39 mA	
BL67-1CNT/ENC	30	< 109 mA	
BL67-1CVI	30	< 109 mA	

1) Is limited to 4 A by means of the integrated short-circuit protection.

Parker Hannifin Corporation
Pneumatic Division
Richland, Michigan
www.parker.com/pneumatics

www.comoso.com

Digital Input Modules

I/O Modules	Voltage	Part Number
8 PNP Input Module	7 to 30 VDC	**BL67-8DI-P**
8 PNP Input Module, with Diagnostics	7 to 30 VDC	**BL67-8DI-PD**
8 NPN Input Module	24 VDC	**BL67-8DI-N**

Base Module	Part Number	
8 x M8, 3 Pole, Female	**BL67-B-8M8**	
4 x M12, 5 Pole, Female, A-code	**BL67-B-4M12**	
4 x M12, 5 Pole, Female, A-code	**BL67-B-4M12-P**	
1 x M23, 12 Pole, Female	**BL67-B-1M23**	

I/O Modules	Voltage	Part Number
4 PNP Input Module	7 to 30 VDC	**BL67-4DI-P**
4 PNP Input Module, with Diagnostics	7 to 30 VDC	**BL67-4DI-PD**
4 NPN Input Module	24 VDC	**BL67-4DI-N**

Base Module	Part Number	
4 x M8, 3 Pole, Female	**BL67-B-4M8**	
2 x M12, 5 Pole, Female, A-code	**BL67-B-2M12**	
2 x M12, 5 Pole, Female, A-code	**BL67-B-2M12-P**	
4 x M12, 5 Pole, Female, A-code	**BL67-B-4M12**	
1 x M23, 12 Pole, Female	**BL67-B-1M23**	

Parker Hannifin Corporation
Pneumatic Division
Richland, Michigan
www.parker.com/pneumatics

www.comoso.com

Digital Output Modules

I/O Modules	Output Current	Part Number
8 PNP Output Module	0.5 Amps per Channel	**BL67-8DO-0.5A-P**
8 NPN Output Module	0.5 Amps per Channel	**BL67-8DO-0.5A-N**

Base Module	Part Number	
8 x M8, 3 Pole, Female	**BL67-B-8M8**	
4 x M12, 5 Pole, Female, A-code	**BL67-B-4M12**	
4 x M12, 5 Pole, Female, A-code	**BL67-B-4M12-P**	
1 x M23, 12 Pole, Female	**BL67-B-1M23**	

I/O Modules	Output Current	Part Number
4 PNP Output Module	0.5 Amps per Channel	**BL67-4DO-0.5A-P**
4 PNP Output Module	2 Amps per Channel	**BL67-4DO-2A-P**
4 PNP Output Module	4 Amps per Channel	**BL67-4DO-4A-P**
4 NPN Output Module	2 Amps per Channel	**BL67-4DO-2A-N**

Base Module	Part Number	
4 x M8, 3 Pole, Female	**BL67-B-4M8**	
2 x M12, 5 Pole, Female, A-code	**BL67-B-2M12**	
2 x M12, 5 Pole, Female, A-code	**BL67-B-2M12-P**	
4 x M12, 5 Pole, Female, A-code	**BL67-B-4M12**	
1 x M23, 12 Pole, Female	**BL67-B-1M23**	

Parker Hannifin Corporation
Pneumatic Division
Richland, Michigan
www.parker.com/pneumatics

www.comoso.com

Digital Output Modules

I/O Modules	Output Current	Part Number
16 PNP Output Module	0.14 Amps per Channel	**BL67-16DO-0.1A-P**

Base Module	Part Number	
1 x M23, 19 Pole, Female	**BL67-B-1M23-19**	

Relay Output Modules

I/O Modules	Output Current	Part Number
8 Normally Open Relays	0.1 Amps per Channel	**BL67-8DO-R-NO**

Base Module	Part Number	
4 x M12, 5 Pole, Female, A-code	**BL67-B-4M12-P**	

Combination Input / Output Modules

I/O Modules	Input Voltage & Output Current	Part Number
4 PNP Output 4 PNP Input Module, with Diagnostics	7 to 30 VDC 0.5 Amps	**BL67-4DI4DO-PD**
8 PNP Configurable Input or Output Module, with Diagnostics	7 to 30 VDC 0.5 Amps	**BL67-8XSG-PD**

Base Module	Part Number	
8 x M8, 3 Pole, Female	**BL67-B-8M8**	
4 x M12, 5 Pole, Female, A-code	**BL67-B-4M12**	
4 x M12, 5 Pole, Female, A-code	**BL67-B-4M12-P**	

Parker Hannifin Corporation
Pneumatic Division
Richland, Michigan
www.parker.com/pneumatics

www.comoso.com

Analog Input Modules

I/O Modules	Input Type	Part Number
4 Configurable Current or Voltage Analog Input Module	4 to 20 mA or 0 to 20 mA -10 to +10 VDC or 0 to +10 VDC	**BL67-4AI-V/I**

Base Module	Part Number	
4 x M12, 5 Pole, Female, A-code	**BL67-B-4M12**	

I/O Modules	Input Type	Part Number
2 Current Analog Input Module	4 to 20 mA or 0 to 20 mA	**BL67-2AI-I**
2 Voltage Analog Input Module	-10 to +10 VDC or 0 to +10 VDC	**BL67-2AI-V**
2 Temperature Analog Input Module	PT100, PT200, PT500, PT1000, Ni100, Ni1000	**BL67-2AI-PT**
2 Temperature Analog Input Module	Type B, E, J, K, N R, S, T	**BL67-2AI-TC**

Base Module	Part Number	
2 x M12, 5 Pole, Female, A-code	**BL67-B-2M12**	

Analog Output Modules

I/O Modules	Input Type	Part Number
4 Voltage Analog Output Module	-10 to +10 VDC or 0 to +10 VDC	**BL67-4AO-V**

Base Module	Part Number	
4 x M12, 5 Pole, Female, A-code	**BL67-B-4M12**	

I/O Modules	Input Type	Part Number
2 Current Analog Output Module	4 to 20 mA or 0 to 20 mA	**BL67-2AO-I**
2 Voltage Analog Output Module	-10 to +10 VDC or 0 to +10 VDC	**BL67-2AO-V**

Base Module	Part Number	
2 x M12, 5 Pole, Female, A-code	**BL67-B-2M12**	

Parker Hannifin Corporation
Pneumatic Division
Richland, Michigan
www.parker.com/pneumatics

www.comoso.com

Combination Analog Input / Output Modules

I/O Modules	Output Current	Part Number
4 Configurable Input and 4 Configurable Output Current or Voltage Analog Module	4 to 20 mA or 0 to 20 mA -10 to +10 VDC or 0 to +10 VDC	**BL67-4AI4AO-V/I**

Base Module	Part Number	
8 x M8, 3 Pole, Female	**BL67-B-8M8**	
4 x M12, 5 Pole, Female, A-code	**BL67-B-4M12**	
2 x M12, 8 Pole, Female, A-code	**BL67-B-2M12-8-P**	

I/O Modules	Output Current	Part Number
2 Configurable Input and 2 Configurable Output Current or Voltage Analog Module	4 to 20 mA or 0 to 20 mA -10 to +10 VDC or 0 to +10 VDC	**BL67-2AI2AO-V/I**

Base Module	Part Number	
8 x M8, 3 Pole, Female	**BL67-B-8M8**	
2 x M12, 8 Pole, Female, A-code	**BL67-B-2M12-8**	
2 x M12, 8 Pole, Female, A-code	**BL67-B-2M12-8-P**	

Parker Hannifin Corporation
Pneumatic Division
Richland, Michigan
www.parker.com/pneumatics

www.comoso.com

Power Extender Module

Extender Module	Current Capacity	Part Number
24 VDC Field Power Module	10 Amps Input	**BL67-PF-24VDC**

Base Module	Part Number	
5 Pole Mini Connector to Supply Bus Power and Field Power	**BL67-B-1RSM**	
5 Pole Mini Connector to Field Power Only	**BL67-B-1RSM-VO**	
4 Pole Mini Connector to Supply Bus Power and Field Power	**BL67-B-1RSM-4**	

CANopen Subnet Module

Extender Module	Capacity	Part Number
1 CANopen Connection	64 Bits of Inputs or Outputs	**BL67-1CVI**

Base Module	Part Number	
1 x M12, 5 Pole, Female, A-code	**BL67-B-1M12**	

Parker Hannifin Corporation
Pneumatic Division
Richland, Michigan
www.parker.com/pneumatics

www.comoso.com

Serial Interface Module

Extender Module	Capacity	Part Number
1 RS232 Serial Interface	300 to 115200 bps	**BL67-1RS232**
1 RS485 or 422 Serial Interface	300 to 115200 bps	**BL67-1RS485/422**

Base Module	Part Number	
1 x M12, 5 Pole, Female, A-code	**BL67-B-1M12**	
1 x M12, 8 Pole, Female, A-code	**BL67-B-1M12-8**	
1 x M23, 12 Pole, Female	**BL67-B-1M23**	

SSI and Counting Modules

Extender Module	Capacity	Part Number
1 SSI Sensor Interface	65 kbps up to 1 Mbps	**BL67-1SSI**
1 Counter Interface	Up to 250 kHz	**BL67-1CNT/ENC**

Base Module	Part Number	
1 x M12, 8 Pole, Female, A-code	**BL67-B-1M12-8**	
1 x M23, 12 Pole, Female	**BL67-B-1M23**	

Parker Hannifin Corporation
Pneumatic Division
Richland, Michigan
www.parker.com/pneumatics

www.comoso.com

Digital PNP Input Modules

Digital DC Input Module	BL67-4DI-P	BL67-8DI-P	BL67-4DI-PD	BL67-8DI-PD
Number of Inputs	4	8	4	8
Sensor Requirement	PNP Sourcing		PNP Sourcing	
Voltage, On-State Input, Nom.	24 VDC		24 VDC	
Field Power for Inputs Current Consumption	49 mA		109 mA	
Bus Power Current Consumption	30 mA		30 mA	
Low Level Signal Voltage	<4.5 V		<4.5 V	
High Level Signal Voltage	7…30V		7…30V	
Low Level Signal Current	<1.5 mA		<1.5 mA	
High Level Signal Current	2.1…3.7 mA		2.1…3.7 mA	
Type of Diagnositcs	Group Diagnostics		Channel Diagnostics	
Short Circuit Protection	Group Protection		Channel Protection	
Input Delay	0.25 ms		0.25; 2.5 ms	

PNP (Sourcing)

PNP input modules provide sourcing capabilities. When the input field device is passing, current flows from the input device into the Turck input module.

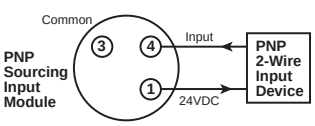

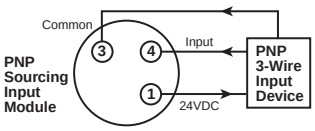

Digital NPN Input Modules

Digital DC Input Module	BL67-4DI-N	BL67-8DI-N
Number of Inputs	4	8
Sensor Requirement	NPN Sinking	
Voltage, On-State Input, Nom.	24 VDC	
Field Power for Inputs Current Consumption	10 mA	
Bus Power Current Consumption	30 mA	
Low Level Signal Voltage	>7 V	
High Level Signal Voltage	<5 V	
Low Level Signal Current	<2.5 mA	<1.2 mA
High Level Signal Current	>3 mA	>1.5 mA
Type of Diagnositcs	Group Diagnostics	
Short Circuit Protection	Group Protection	
Input Delay	0.25 ms	

NPN (Sinking)

NPN input modules provide sinking capabilities. When the input field device is passing, current out of the Turck input module into the field input device.

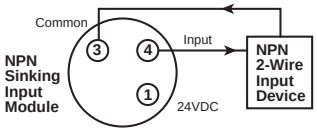

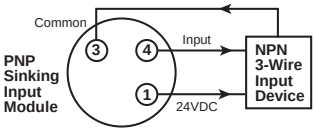

Parker Hannifin Corporation
Pneumatic Division
Richland, Michigan
www.parker.com/pneumatics

Digital PNP Output Modules

Digital DC Output Module	BL67-4DO-0.5A-P	BL67-8DO-0.5A-P	BL67-4DO-2A-P	BL67-16DO-0.1A-P
Number of Outputs	4	8	4	16
Sensor Requirement	PNP Sourcing			
Output Voltage	24 VDC			
Field Power for Outputs Current Consumption	109 mA (Plus load current)			
Bus Power Current Consumption	30 mA			
Output Current per Channel	0.5 A		2.0A	0.1 A
Output Delay	3 ms			
Load Type	Resistive, Inductive, Lamp Load			Resistive, Inductive
Load Resistance, Resistive	>48 Ohm		>12 Ohm	>250 Ohm
Load Resistance, Inductive	<1.2 H			
Lamp Load	< 3W		< 10W	
Switching Frequency, Resistive	<200 Hz			
Switching Frequency, Inductive	< 2 Hz			
Switching Frequency, Lamp Load	< 20 Hz			
Short-Circuit Protection	Group Protection			
Diagnostic Bits	4	8	4	16

PNP (Sourcing)

PNP input modules provide sourcing capabilities. When the input field device is passing, current flows from the input device into the Turck input module.

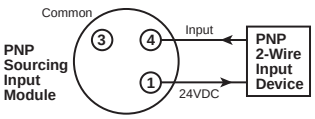

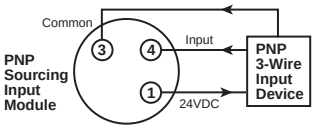

Digital NPN Output Modules

Digital DC Output Module	BL67-8DO-0.5A-N	BL67-4DO-2A-N
Number of Outputs	8	4
Sensor Requirement	NPN Sinking	
Output Voltage	24 VDC	
Field Power for Outputs Current Consumption	109 mA (Plus load current)	
Bus Power Current Consumption	30 mA	
Output Current per Channel	0.5 A	2.0 A
Output Delay	3 ms	
Load Type	Resistive, Inductive, Lamp Load	
Load Resistance, Resistive	>48 Ohm	
Load Resistance, Inductive	<1.2 H	
Lamp Load	< 3W	
Switching Frequency, Resistive	<200 Hz	
Switching Frequency, Inductive	< 2 Hz	
Switching Frequency, Lamp Load	< 20 Hz	
Short-Circuit Protection	Group Protection	
Diagnostic Bits	4	8

NPN (Sinking)

NPN input modules provide sinking capabilities. When the input field device is passing, current out of the Turck input module into the field input device.

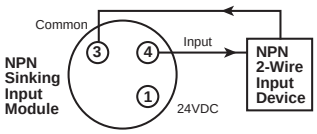

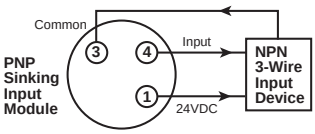

Parker Hannifin Corporation
Pneumatic Division
Richland, Michigan
www.parker.com/pneumatics

Relay Output Modules

Relay Output Module	BL67-8DO-R-NO
Number of Outputs	8
Output Type	Relay
Output Voltage	24 VDC
Field Power for Outputs Current Consumption	109 mA (Plus load current)
Bus Power Current Consumption	30 mA
Output Current per Channel	100 mA
Output Delay	3 ms
Load Type	Resistive, TTL logic
Switching Resistor	<31 Ohm
Switching Frequency, Resistive	<200 Hz
Short-Circuit Protection	None

Combination Digital Modules

Combination Input and Output Modules	BL67-4DI4DO-PD	BL-67-8XSG-PD
Number of Outputs	4	Configurable 0 to 8
Number of Inputs	4	Configurable 0 to 8
Total Channels	8	8
Sensor Requirement	PNP Sourcing	
Voltage, On-State Input, Nom.	24 VDC	
Output Voltage	24 VDC	
Field Power for Outputs Current Consumption	109 mA	
Bus Power Current Consumption	30 mA	
Input Low Level Signal Voltage	<4.5 V	
Input High Level Signal Voltage	7…30V	
Input Low Level Signal Current	<1.5 mA	
Input High Level Signal Current	2.1…3.7 mA	
Input Delay	0.25; 2.5 ms	
Output Current per Channel	0.5 A	
Output Delay	3 ms	
Load Type	Resistive, Inductive, Lamp Load	
Load Resistance, Resistive	>48 Ohm	
Load Resistance, Inductive	<1.2 H	
Lamp Load	< 3W	
Switching Frequency, Resistive	<200 Hz	
Switching Frequency, Inductive	< 2 Hz	
Switching Frequency, Lamp Load	< 20 Hz	
Short-Circuit Protection	Channel Protection	
Diagnostic Bits	8	12

Parker Hannifin Corporation
Pneumatic Division
Richland, Michigan
www.parker.com/pneumatics

www.comoso.com

Analog Input Modules

Analog Input Module	BL67-2AI-I	BL67-2AI-V	BL67-4AI-V/I
Number of Inputs	2	2	4
Nominal Voltage	24 VDC		
Field Power for Inputs Current Consumption	22 mA		
Bus Power Current Consumption	35 mA		
Analog Input Type	0/4…20mA	-10/0…+10 VDC	0/4…20mA or -10/0…+10 VDC
Input Resistance	<0.125 kOhm	<98.5 kOhm	<0.125 kOhm or <98.5 kOhm
Maximum Limiting Frequency	50 Hz		20 Hz
Fault Limit @ 23 degree C	<0.2%		<0.3%
Repeatability	0.05%		
Temperature Coefficient (ppm/degree C of full scale)	<300	<150	<300
Resolution	16 Bit		
Measuring Principle	Sigma Delta		
Measured Value Display	16 Bit Signed Integer, 12 Bit Full Range Left Justified		
Diagnostic Bits	16		32

Temperature Inputs

Analog Input Module	BL67-2AI-PT	BL67-2AI-TC
Number of Inputs	2	2
Nominal Voltage	24 VDC	
Field Power for Inputs Current Consumption	58 mA	40 mA
Bus Power Current Consumption	45 mA	35 mA
Temperature Input Type	PT100, PT200, PT500, PT1000, Ni100, Ni1000	B, E, J, K, N, R, S, T
Voltage Resolution	n/a	+/- 50mV; <2uV
Fault Limit @ 23 degree C	<0.2%	
Repeatability	0.05%	
Temperature Coefficient (ppm/degree C of full scale)	<300	
Resolution	16 Bit	
Measured Value Display	16 Bit Signed Integer, 12 Bit Full Range Left Justified	
Diagnostic Bits	16	

Parker Hannifin Corporation
Pneumatic Division
Richland, Michigan
www.parker.com/pneumatics

www.comoso.com

Analog Input Modules

Analog Input Module	BL67-2AO-I	BL67-2AO-V
Number of Inputs	2	2
Nominal Voltage	24 VDC	
Field Power for Outputs Current Consumption	62 mA	67 mA
Bus Power Current Consumption	40 mA	60 mA
Analog Output Type	0/4…20mA	-10/0…+10 VDC
Output Current per Channel	n/a	250 mA
Load Resistance, Resistive	<0.45 kOhm	> 1kOhm
Load Resistance, Inductive	<1 mH	n/a
Load Resistance, Capacitive	n/a	> 1 uF
Transmission Frequency	<200 Hz	<100 Hz
Fault Limit @ 23 degree C	<0.2%	
Repeatability	0.05%	
Temperature Coefficient (ppm/degree C of full scale)	<150	<300
Resolution	16 Bit	
Measured Value Display	16 Bit Signed Integer, 12 Bit Full Range Left Justified	

Combination Analog Modules

Analog Combination Module	BL67-4AI4AO-V/I	BL67-2AI2AO-V/I
Number of Analog Inputs	4	2
Number of Analog Outputs	4	2
Nominal Voltage	24 VDC	
Field Power for Outputs Current Consumption	67 mA	
Bus Power Current Consumption	60 mA	
Analog Input Type	0/4…20mA or -10/0…+10 VDC	
Input Resistance	0.065 or 225 kOhm	
Maximum Limiting Frequency	20 Hz	
Fault Limit @ 23 degree C	<0.3%	
Repeatability	0.05%	
Temperature Coefficient (ppm/degree C of full scale)	<300	
Resolution	16 Bit	
Measuring Principle	Sigma Delta	
Measured Value Display	16 Bit Signed Integer 12 Bit Full Range Left Justified	
Analog Output Type	-10/0…+10 VDC	
Output Current per Channel	250 mA	
Load Resistance, Resistive	>1 kOhm	
Load Resistance, Capacitive	<1 uF	
Transmission Frequency	<100 Hz	
Fault Limit @ 23 degree C	<0.3%	
Repeatability	0.05%	
Temperature Coefficient (ppm/degree C of full scale)	<300	
Resolution	16 Bit	
Measured Value Display	16 Bit Signed Integer, 12 Bit Full Range Left Justified	
Diagnostic Bits	8	4

Parker Hannifin Corporation
Pneumatic Division
Richland, Michigan
www.parker.com/pneumatics

www.comoso.com

Power Extender Module

Power Extender Module	BL67-PF-24VDC
Nominal Voltage	24 VDC
Field Power for Outputs Current Consumption	9 mA
Bus Power Current Consumption	30 mA
Supply for Field Power for Inputs Current	4.0 A
Supply for Field Power for Outputs Current	10 A
Diagnostic Bits	3

RS232 Interface

RS232 Interface	BL67-1RS232
Number of Channels	1
Field Power for Inputs Current Consumption	90 mA
Bus Power Current Consumption	140 mA
Transmission Level Active (U RS1)	-15 to -3 VDC
Transmission Level Inactive (URSO)	3 to 15 VDC
Common-mode Range (UGL)	-7 to 12 VDC
Transmission Signals	RxD, TxD, RTS, CTS
Data Buffer Received	128 Byte
Send Data Buffer	64 Byte
Connection Type	Full Duplex
Transmission Rate	300 to 115200 bps
Parameter	Transmission Rate, Diagnostics, Data Bits, Stop Bits, XON - Character, XOFF - Character, Parity, Flow Control
Cable Length	15 m
Diagnostic Bits	8

RS485 / 422 Interface

RS485/422 Interface	BL67-1RS485/422
Number of Channels	1
Field Power for Inputs Current Consumption	42 mA
Bus Power Current Consumption	60 mA
Transmission Signals	RxD, TxD
Connection Type	2 Wire Half Duplex or 4 Wire Full Duplex
Transmission Rate	300 to 115200 bps
Parameter	RS485/422, Transmission Rate, Diagnostics, Data Bits, Stop Bits, XON - Character, XOFF - Character, Parity, Flow Control
Cable Length	1000 m
Line Impedance	120 Ohm
Bus Termination	External
Diagnostic Bits	8

Parker Hannifin Corporation
Pneumatic Division
Richland, Michigan
www.parker.com/pneumatics

www.comoso.com

SSI Sensor Interface

SSI Sensor Interface	BL67-1SSI
Number of Channels	1
Field Power for Inputs Current Consumption	39 mA
Bus Power Current Consumption	50 mA
Transmission Signals	CL, D
Connection Type	4 Wire Full Duplex (Clock Output/Signal Input)
Transmission Rate	62.5 kbps up to 1 Mbps
Parameter	Transmission Rate, Diagnostics, Data Format (Binary / GRAY coded), Data Fram Bits (1-32), Number of Invalid Bits (LSB: 0-15, MSB 0-7)
Cable Length	30 m
Diagnostic Bits	8

Counting Module

Counting Module	BL67-1CNT/ENC
Number of Channels	1
Field Power for Inputs Current Consumption	109 mA
Bus Power Current Consumption	30 mA
Input Type	PNP
Output Type	PNP
Output Current per Channel	0.5 A
Output Delay	2 ms
Load Type	Resistive
Frequency Measurement	Up to 250 kHz
Speed Measurement	Factor Configurable
Period Duration Measurement	2 usec
Upper Count Limit	0x80000000 up to 0xFFFFFFFF
Lower Count Limit	0x80000000 up to 0xFFFFFFFF
Short Circuit Protection	Channel Protection

CANopen Expansion Module

CANopen Expansion Module	BL67-1CVI
Number of Channels	1
Field Power for Inputs Current Consumption	109 mA
Bus Power Current Consumption	30 mA
Transmission Signals	CAN High, CAN Low
Connection Type	CANopen
Transmission Speed	10 kbps up to 1 Mbps
Parameter	Transmission Rate, Diagnostics, Bus Termination, Range of I/O Data
Bus Termination	Internal
Diagnostic Bits	48
Max Number of CANopen Nodes	8
Max Processing Data per Module	8 Byte
Max Data Per Node	4 Byte

Parker Hannifin Corporation
Pneumatic Division
Richland, Michigan
www.parker.com/pneumatics

www.comoso.com

Power Distribution Options for Turck Fieldbus

Turck Communication and I/O Modules - DeviceNet and CANopen, Power over Network

The 24VDC power supply pins from the DeviceNet or CANopen network connection on the communication module provides a single power circuit. This circuit provides 1.5 A bus power, 4 A field power for inputs and 8A field power for outputs.

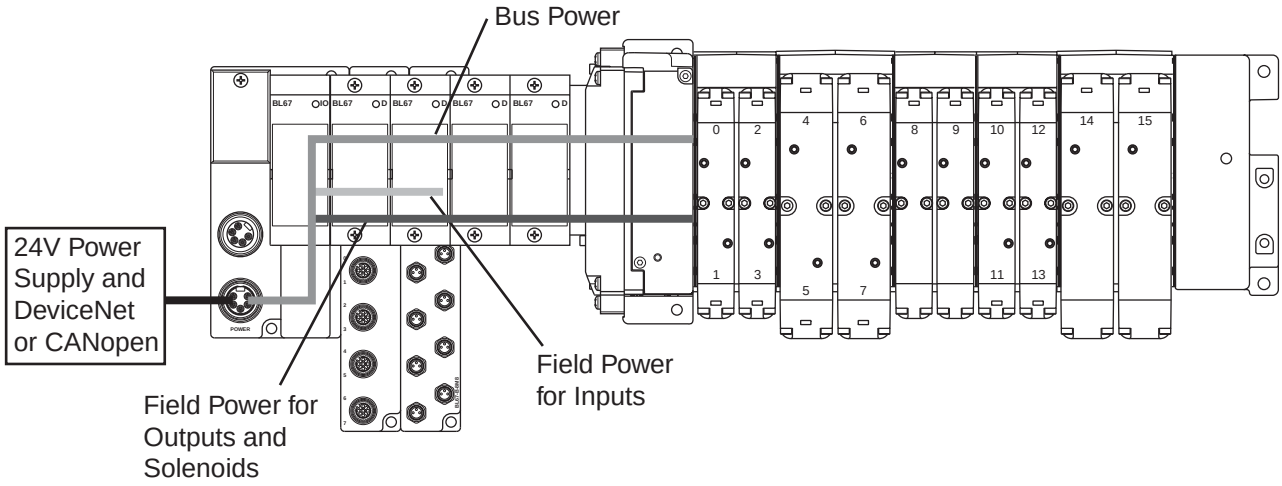

Turck Communication and I/O Modules - Ethernet/IP, Modbus/TCP, Profinet, Profibus, and CANopen

An auxiliary 24VDC power supply from the communication module provides power across two separate circuits. The first circuit provides 1.5 A bus power and 4 A field power for inputs. The second circuit provides 10A field power for outputs which can be wired to an e-stop circuit to kill all outputs.

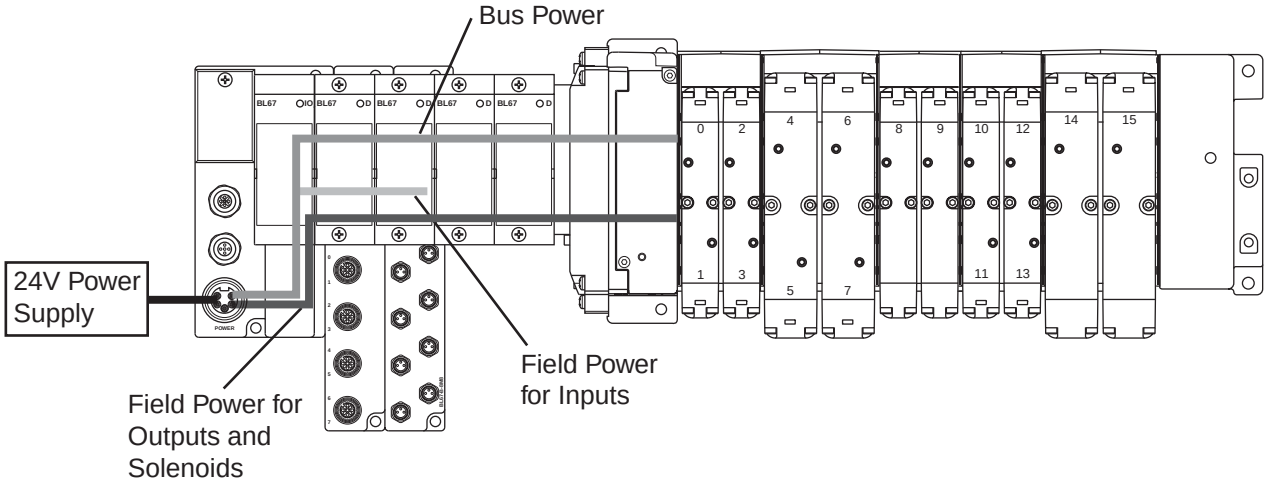

Parker Hannifin Corporation
Pneumatic Division
Richland, Michigan
www.parker.com/pneumatics

Power Distribution Options for Turck Fieldbus

24VDC Power Extender Module (BL67-PF-24VDC) with base module BL67-B-1RSM

This configuration creates an auxiliary 24VDC power supply and provides power across two separate circuits, regardless of the communication module used. The first circuit provides 4 A field power for inputs. The second circuit provides 10A field power for outputs which can be wired to an e-stop circuit to kill all outputs and solenoids to the right of the module. The 1.5 A bus power is uninterrupted, and is still supplied from the communication module.

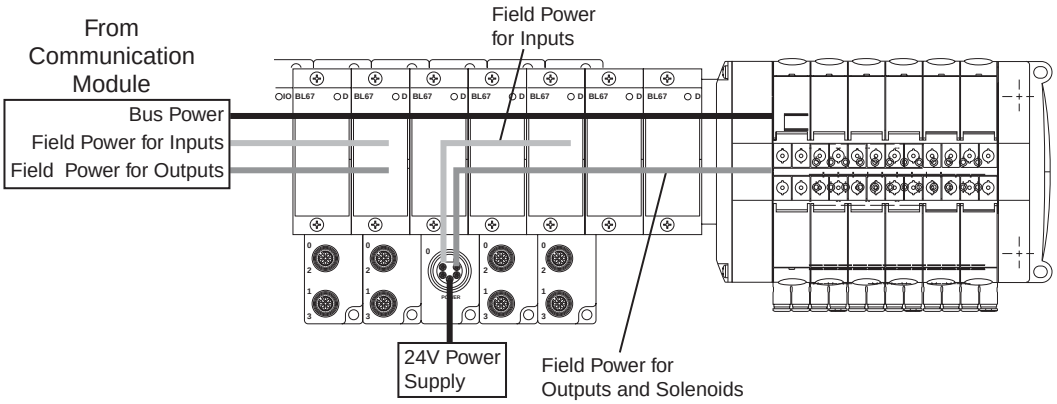

24VDC Power Extender Module (BL67-PF-24VDC) with base module BL67-B-1RSM-4

This configuration creates an auxiliary 24VDC power supply and provides power across one circuit, regardless of the communication module used. This circuit provides 4 A field power for inputs and 10A field power for outputs. The 1.5 A bus power is uninterrupted, and is still supplied from the communication module.

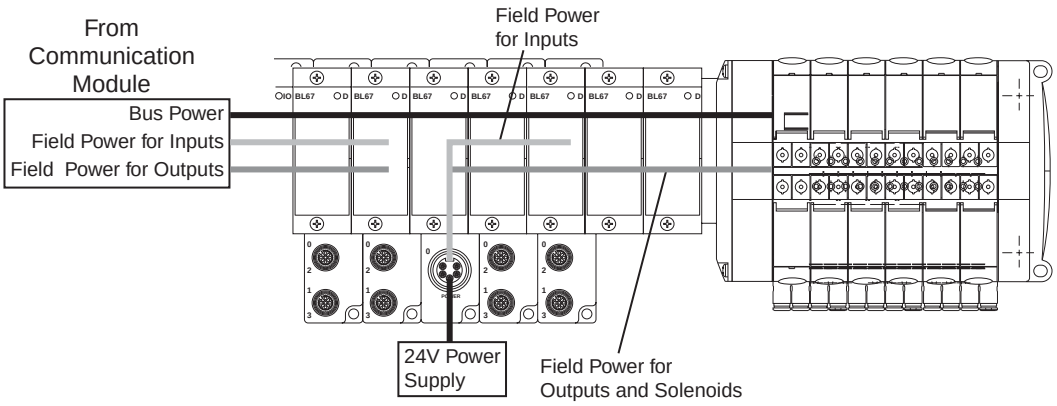

24VDC Power Extender Module (BL67-PF-24VDC) with base module BL67-B-1RSM-VO

This configuration creates an auxiliary 24VDC power supply and provides power across one circuit, regardless of the communication module used. This circuit provides 10A field power for outputs which can be wired to an e-stop circuit to kill all outputs and solenoids to the right of the module. The 1.5 A bus power and 4 A field power for inputs are uninterrupted, and are still supplied from the communication module.

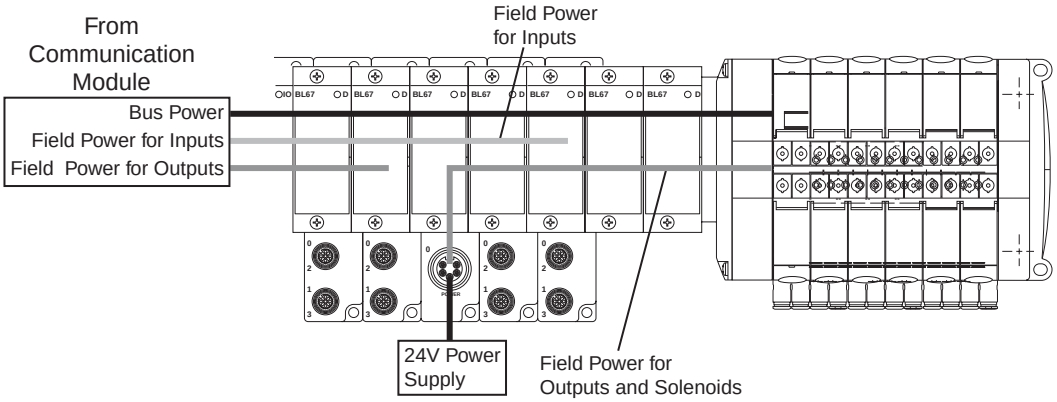

Parker Hannifin Corporation
Pneumatic Division
Richland, Michigan
www.parker.com/pneumatics

7/8" Mini Power Cables

Part Number	Description
RKM 46-xM/S1587	4 Pin Female to Flying Lead Cable, TPE
RKM 56-xM/S1587	5 Pin Female to Flying Lead Cable, TPE
RSM RKM 46-x/S1587	4 Pin Male to Female Cable, TPE
RSM RKM 56-x/S1587	5 Pin Male to Female Cable, TPE
WKM 46-xM/S1587	4 Pin Right Angle Female to Flying Lead Cable, TPE
WKM 56-xM/S1587	5 Pin Right Angle Female to Flying Lead Cable, TPE

Where x = 2, 4, 5, 6, 8, 10 meter standard lengths

RKM Female Socket

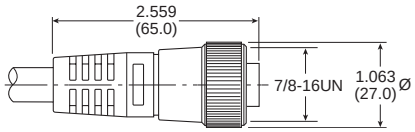

RSM Male Pins

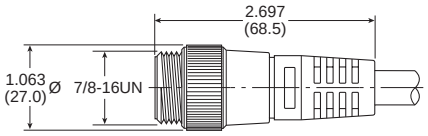

WKM Female Socket

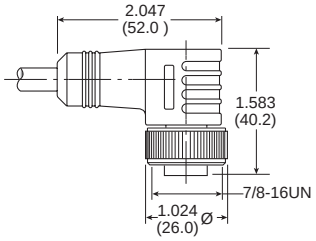

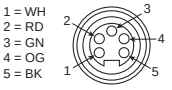

5-Pin Female
Wiring Diagram

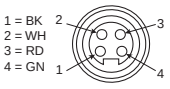

4-Pin Female
Wiring Diagram

Power Tee

Part Number	Description
RSM-2RKM 40	4 Pin Male to 2 Female Sockets
RSM-2RKM 50	5 Pin Male to 2 Female Sockets

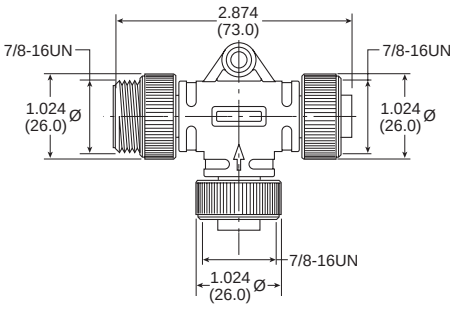

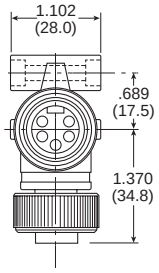

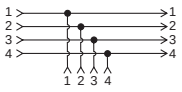

RSM-2RKM 40

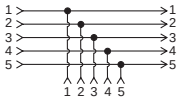

RSM-2RKM 50

Parker Hannifin Corporation
Pneumatic Division
Richland, Michigan
www.parker.com/pneumatics

www.comoso.com

M12 A-code Cables

Part Number	Description
RKC 4.4T-*	4 Pin Female to Flying Lead Cable, PVC
RSC 4.4T-*	4 Pin Male to Flying Lead Cable, PVC
RKC 4.4T-*-RSC 4.4T	4 Pin Male to Female Cable, PVC
RKC 4.5T-*/S1587	5 Pin Female to Flying Lead Cable, TPE
RSC 4.5T-*/S1587	5 Pin Male to Flying Lead Cable, TPE
RKC 4.5T-*-RSC 4.5T/S1587	5 Pin Male to Female Cable, TPE

Where * = 1, 2, 3, 4 meter standard lengths

RKC Female Sockets

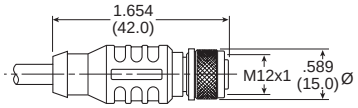

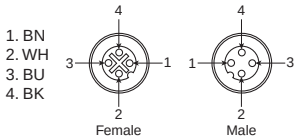

4-Pin Female Wiring Diagram

RSC Male Pins

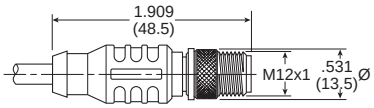

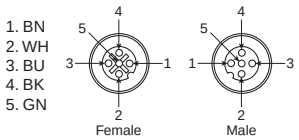

5 -Pin Female Wiring Diagram

M8 Cables

Part Number	Description
PKG 3M-*M/S90	3 Pin Female to Flying Lead Cable, PUR
PSG 3M-*M/S90	3 Pin Male to Flying Lead Cable, PUR
PKG 3M-*M-PSG 3M/S90	3 Pin Male to Female Cable, PUR

Where * = 1, 2, 3, 4 meter standard lengths

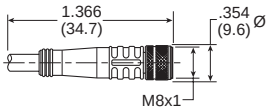

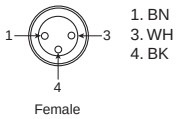

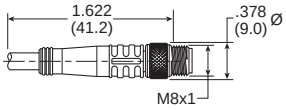

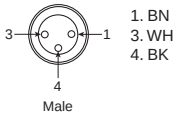

Parker Hannifin Corporation
Pneumatic Division
Richland, Michigan
www.parker.com/pneumatics

www.comoso.com

M23 Cables

Part Number	Description
CSCM CKCM 12-11-x/S90	12 Pin Double Ended Female Thread with Male Pins and Female Socket, PUR. Pinout optimized for Isysnet Fieldbus.
CSM CKM 19-19-x/S90	19 Pin Double Ended Female Thread with Male Pins and Female Socket, PUR. Pinout optimized for Isysnet Fieldbus.
CSWM CKWM 19-19-x/CS12852	19 Pin Double Ended Female Thread with Male Pins and Female Socket, PUR. Pinout optimized for Turck Fieldbus.

Where x = 1, 2, 3, 4 meter standard lengths

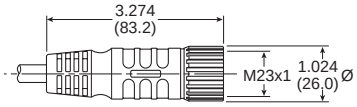

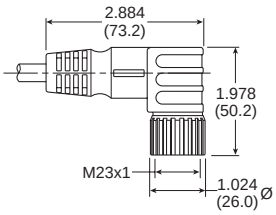

Profibus Cables

Part Number	Description
RSSW RKSW 455-xM	M12 Male to M12 Female, PUR

Where x = 2, 4, 5, 6, 8, 10 meter standard lengths

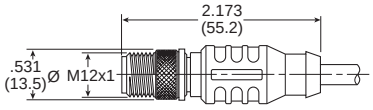

RSSW Side, Male Pins

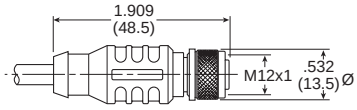

RKSW Side, Female Sockets

Profibus Terminating Resistor

Part Number	Description
P8BPA00MB	M12 Male Pin Terminating Resistor

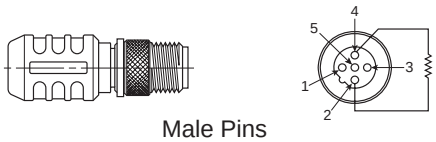

Male Pins

Ethernet Cables

Part Number	Description
RSSD RKSD 443-xM	M12 Female to M12 Male, PUR
RSSD RJ45S 443-xM	RJ45 to M12 Male, PUR

Where x = 2, 5, 10, 15, 20, 30 meter standard lengths

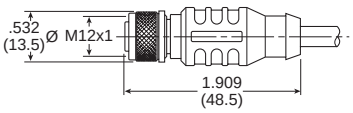

RKSD Side, Female Sockets

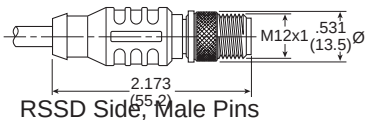

RSSD Side, Male Pins

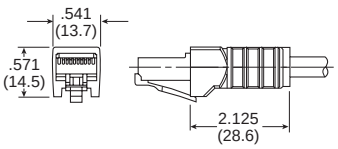

RJ45S Side

Parker Hannifin Corporation
Pneumatic Division
Richland, Michigan
www.parker.com/pneumatics

www.comoso.com

DeviceNet and CANopen Cables

Part Number	Description
RSM RKM 5711-xM	7/8" Mini Male to 7/8" Mini Female, PUR
RSM RKC 5711-xM	7/8" Mini Male to M12 Female, PUR
RSC RKC 5711-xM	M12 Male to M12 Female, PUR
RSC RKM 5711-xM	M12 Male to 7/8" Mini Female, PUR

Where x = 2, 4, 5, 6, 8, 10 meter standard lengths

RSM Side, 7/8 Mini with male Pins

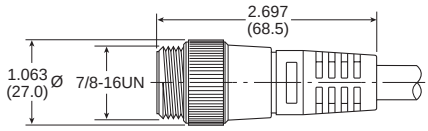

RKM Side, 7/8 Mini with male Pins

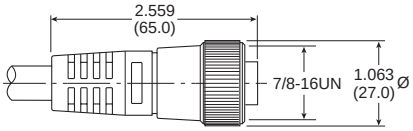

RSC Side, Male Pins

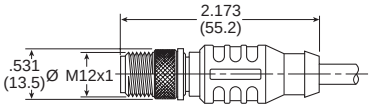

RKC Side, Female Sockets

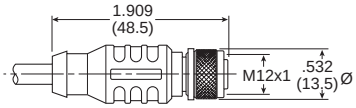

Bus Power Tee

Part Number	Description
RSM RKM 57 WSM 40 PST	Bus Power Tee

For systems not equipped with Power over network, combines separate network and power feeds into the communication module. Includes reverse current protection

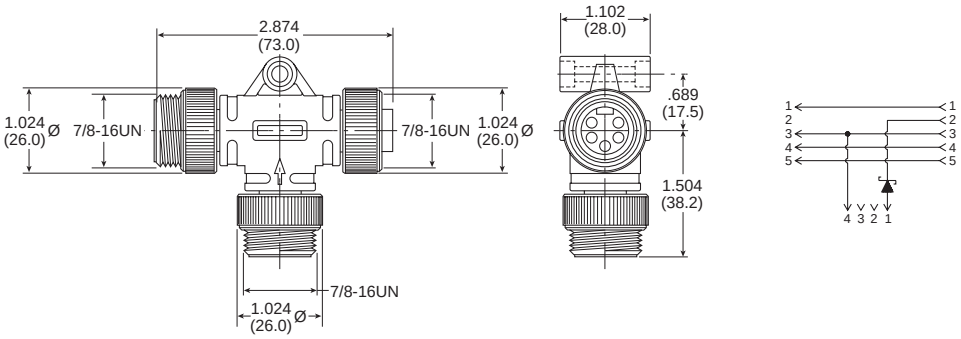

DeviceNet and CANopen Terminating Resistor

Part Number	Description
RSM 57-TR2	7/8" Mini Male Pin Terminating Resistor
P8BPA00MA	M12 Male Pin Terminating Resistor

RSM 57-TR2

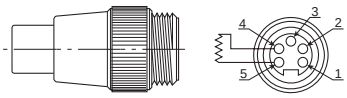

Male Pins

P8BPA00MB

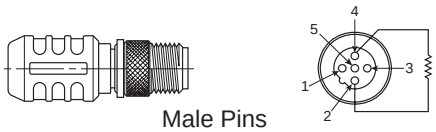

Male Pins

Parker Hannifin Corporation
Pneumatic Division
Richland, Michigan
www.parker.com/pneumatics

www.comoso.com

Isysnet with Isys ISO Valves

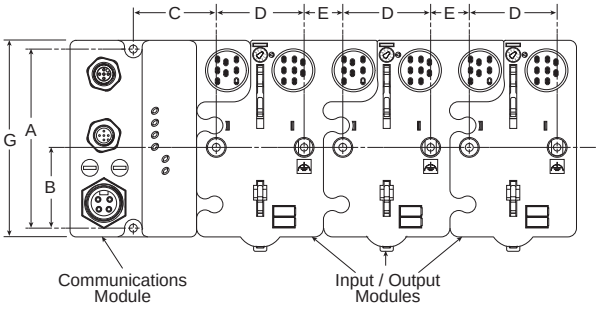

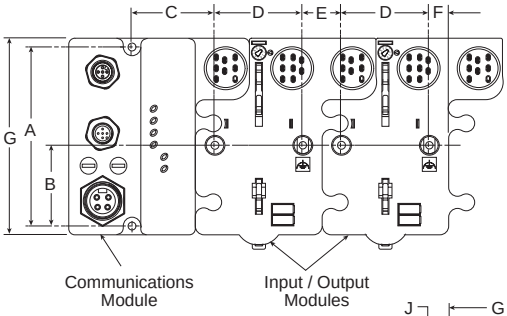

Dimensions

A	B	C	D
4.00 (102)	1.80 (46)	1.90 (48)	2.00 (50)
E	**F**	**G**	
.87 (22)	.43 (11)	4.41 (112)	

Inches (mm)

HB - HA Dimensions

G	H	H_1	J	K
2.68 (68)	.33 (8.4)	1.80 (45.8)	.15 (4)	4.32 (110)
L	**M**	**P**	**W**	**W_1**
.63 (16)	5.39 (137)	5.98 (152)	1.61 (40.8)	2.24 (56.8)

Inches (mm)

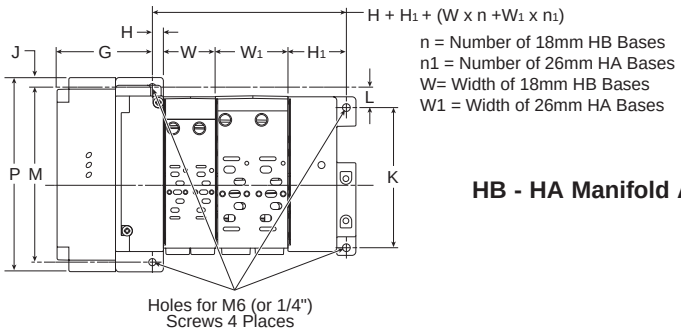

HB - HA Manifold Assembly

H1 Dimensions

G	H	H_1	J	K
2.20 (56)	.63 (15.9)	.63 (15.9)	.33 (8.5)	6.50 (165)
P	**W**			
7.17 (182)	1.93 (49)			

Inches (mm)

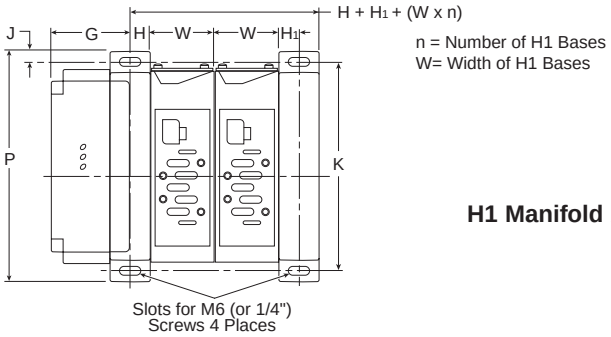

H1 Manifold Assembly

H2 Dimensions

G	H	H_1	J	K
2.28 (58)	.71 (18)	.59 (15)	.47 (12)	8.46 (215)
P	**W**			
9.41 (239)	2.20 (56)			

Inches (mm)

H3 Dimensions

G	H	H_1	J	K
2.52 (64)	.94 (24)	.65 (16.5)	.59 (15)	10.43 (265)
P	**W**			
11.61 (295)	2.80 (71)			

Inches (mm)

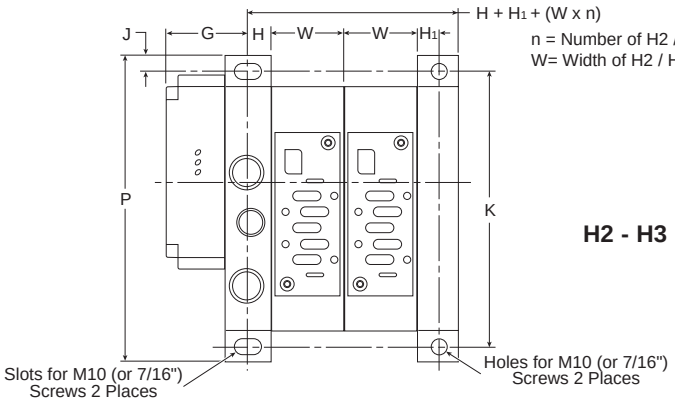

H2 - H3 Manifold Assembly

Parker Hannifin Corporation
Pneumatic Division
Richland, Michigan
www.parker.com/pneumatics

www.comoso.com

Isysnet with Isys Micro Valves

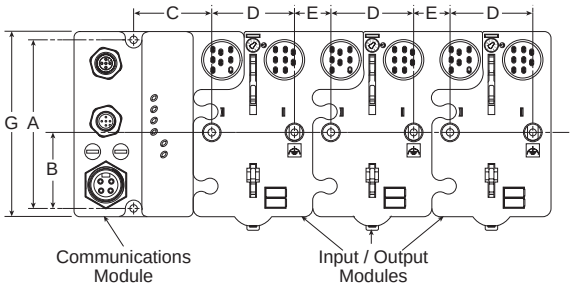

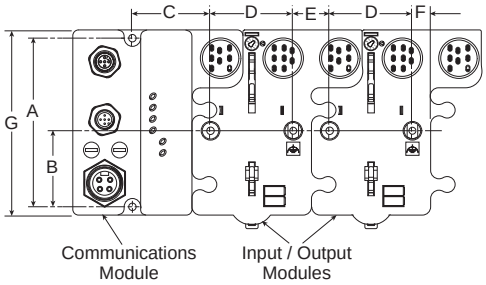

Dimensions

A	B	C	D
4.0 (102)	1.8 (46)	1.9 (48)	2.0 (50)
E	**F**	**G**	
.87 (22)	.43 (11)	4.41 (112)	

Inches (mm)

Isys Micro Manifold Assembly

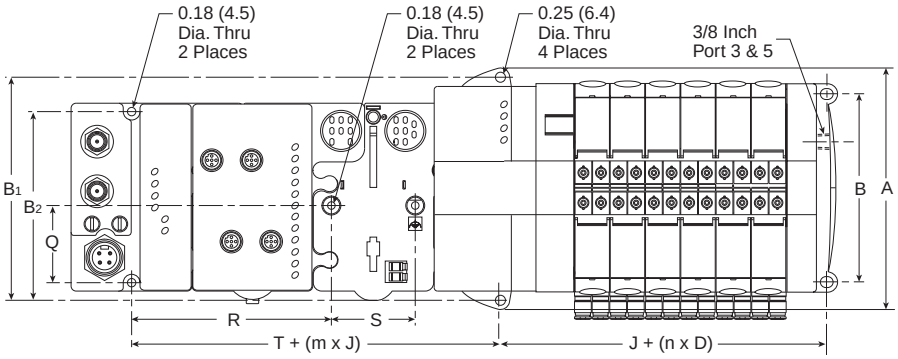

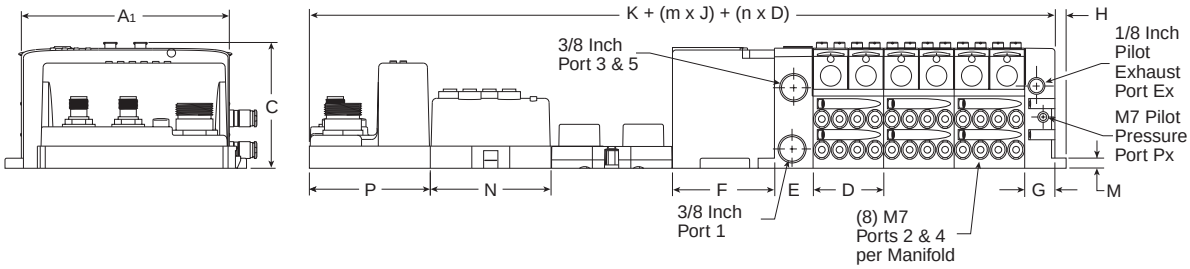

Dimensions

A	A1	B	B1	B2	C	D	E	F	G
5.67 (144.0)	4.88 (124.0)	4.41 (112.0)	5.24 (133.0)	4.02 (102.0)	2.95 (75.0)	1.65 (42.0)	0.91 (23.0)	2.40 (61.0)	0.71 (18.0)
H	**J**	**K**	**M**	**N**	**P**	**Q**	**R**	**S**	**T**
0.49 (12.5)	2.72 (69.0)	7.32 (186.0)	0.24 (6.1)	2.83 (72.0)	2.83 (72.0)	1.81 (46.0)	4.72 (120.0)	2.01 (51.0)	2.01 (51.0)

Inches (mm)
n = Number of Manifolds
m = Number of Modules

Parker Hannifin Corporation
Pneumatic Division
Richland, Michigan
www.parker.com/pneumatics

www.comoso.com

Turck with Isys ISO Valves

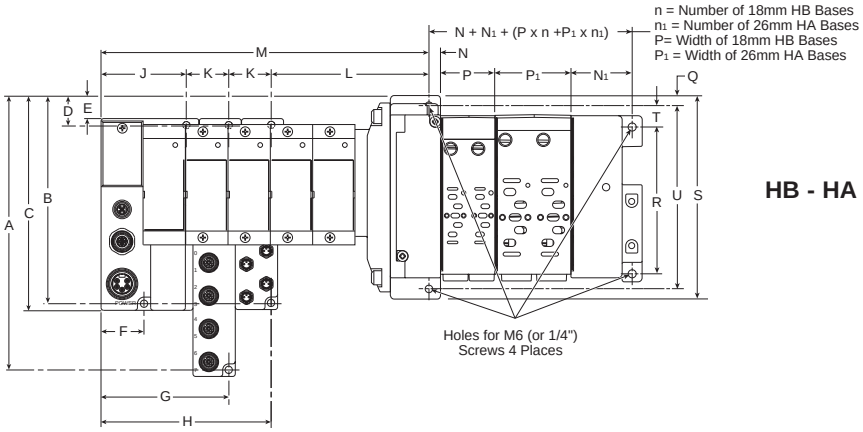

HB - HA Manifold Assembly

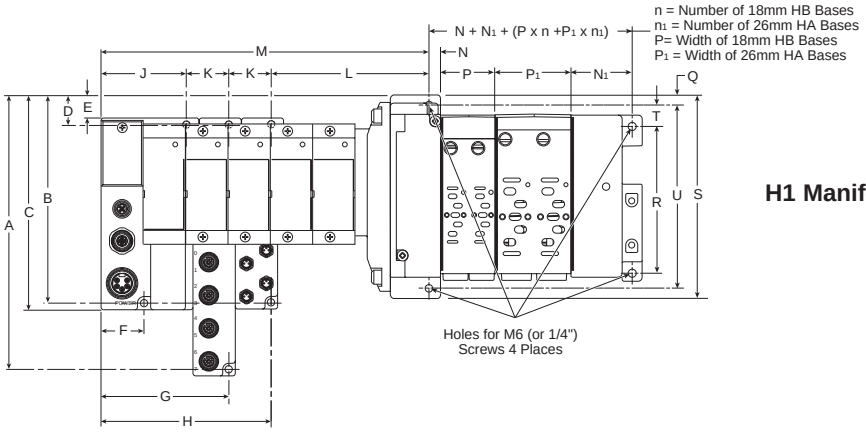

H1 Manifold Assembly

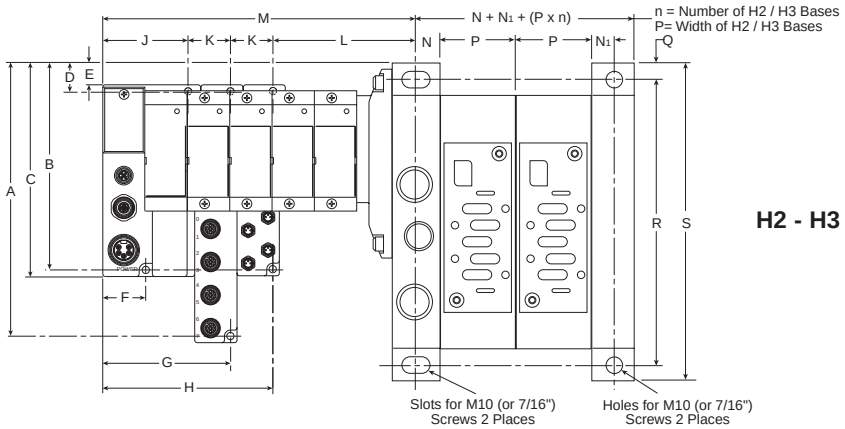

H2 - H3 Manifold Assembly

Dimensions

	A	B	C	D	E	F	G	H	J	K	L	M	N	N1	P	P1	Q	R	S	T	U
HA / HB	8.05 (204.5)	6.08 (154.5)	6.28 (159.5)	0.75 (19.5)	0.57 (14.5)	1.28 (32.5)	3.79 (96.5)	5.06 (128.5)	2.53 (64.5)	1.26 (32)	4.75 (120.8)	See note 1	.33 (8.4)	1.80 (45.8)	1.61 (40.8)	2.24 (56.8)	.15 (4)	4.32 (110)	5.98 (152)	.63 (16)	5.39 (137)
H1	8.53 (216.7)	6.56 (166.7)	6.76 (171.7)	1.25 (31.7)	1.05 (26.7)	1.28 (32.5)	3.79 (96.5)	5.06 (128.5)	2.53 (64.5)	1.26 (32)	4.27 (108.5)	See note 1	.63 (15.9)	.63 (15.9)	1.93 (49)	—	.33 (8.5)	6.50 (165)	7.17 (182)	—	—
H2	8.38 (212.9)	6.41 (162.9)	6.61 (167.9)	1.10 (27.9)	.90 (22.9)	1.28 (32.5)	3.79 (96.5)	5.06 (128.5)	2.53 (64.5)	1.26 (32)	4.26 (108.6)	See note 1	.71 (18)	.59 (15)	2.20 (56)	—	.47 (12)	8.46 (215)	9.41 (239)	—	—
H3	8.62 (218.9)	6.65 (168.9)	6.85 (173.9)	1.33 (33.9)	1.14 (28.9)	1.28 (32.5)	3.79 (96.5)	5.06 (128.5)	2.53 (64.5)	1.26 (32)	4.59 (116.6)	See note 1	.94 (24)	.65 (16.5)	2.80 (71)	—	.59 (15)	10.43 (265)	11.61 (295)	—	—

Note 1: M =J+L+n2xK, where n2 = Number of Turck input / output modules
Inches (mm)

Parker Hannifin Corporation
Pneumatic Division
Richland, Michigan
www.parker.com/pneumatics

www.comoso.com

Turck with Isys Micro Valves

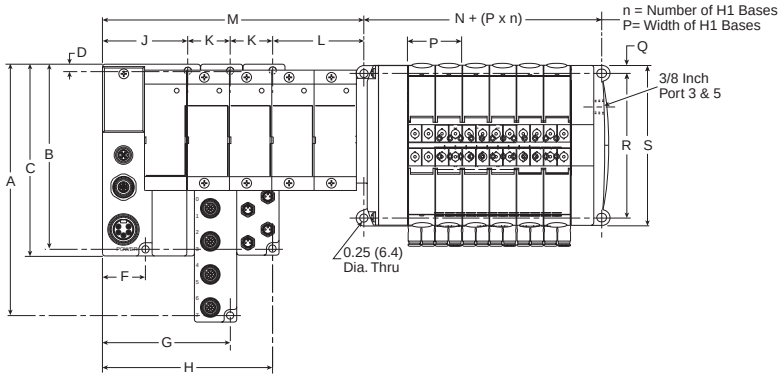

Dimensions

A	B	C	D	F	G	H	J	K	L	M	N	P	Q	R	S
7.48 (190)	5.51 (140)	5.71 (145)	0.20 (5)	1.28 (32.5)	3.79 (96.5)	5.06 (128.5)	2.53 (64.5)	1.26 (32)	2.54 (64)	See note 1	2.28 (58)	1.65 (42)	.19 (4.9)	4.41 (112)	4.88 (124)

Note 1: M =J+L+n2xK, where n2 = Number of Turck input / output modules
Inches (mm)

Moduflex Adapter, Side Ported

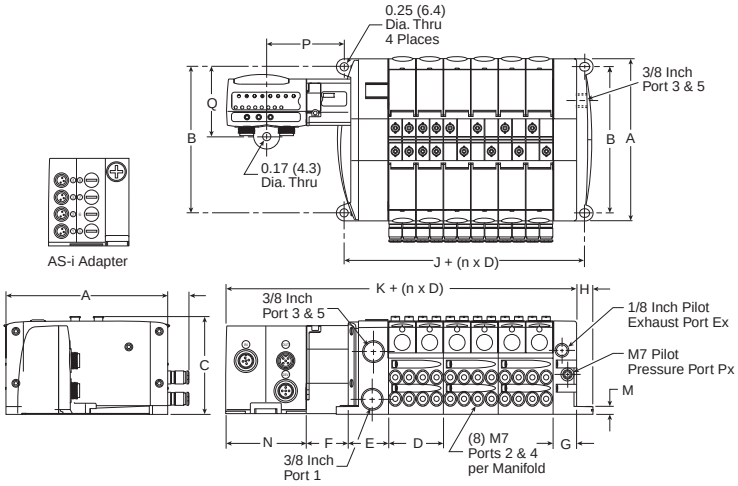

Dimensions

A	B	C	D	E	F	G	H	J	K	M	N	P	Q
4.88 (124.0)	4.41 (112.0)	2.95 (75.0)	1.65 (42.0)	1.22 (31.0)	1.28 (32.5)	0.71 (18.0)	0.49 (12.5)	2.28 (58.0)	6.10 (155.0)	0.24 (6.1)	2.40 (61.0)	2.36 (60.0)	2.07 (52.5)

Inches (mm)
n = Number of Manifolds

Parker Hannifin Corporation
Pneumatic Division
Richland, Michigan
www.parker.com/pneumatics

Moduflex with Isys ISO Valves

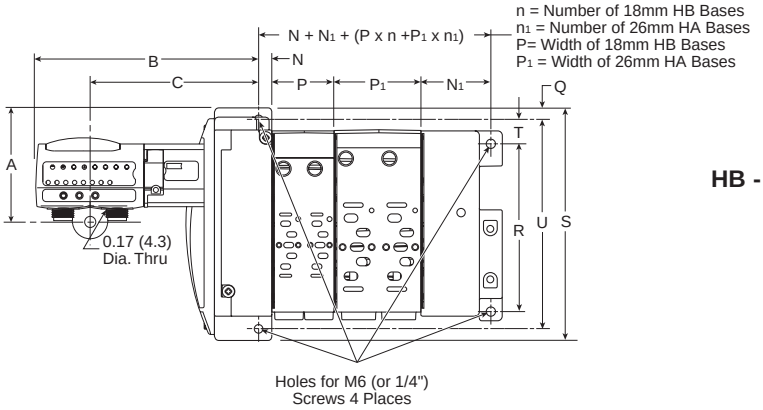

HB - HA Manifold Assembly

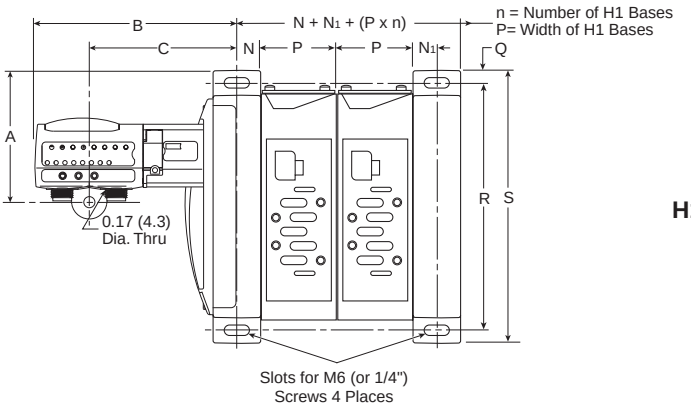

H1 Manifold Assembly

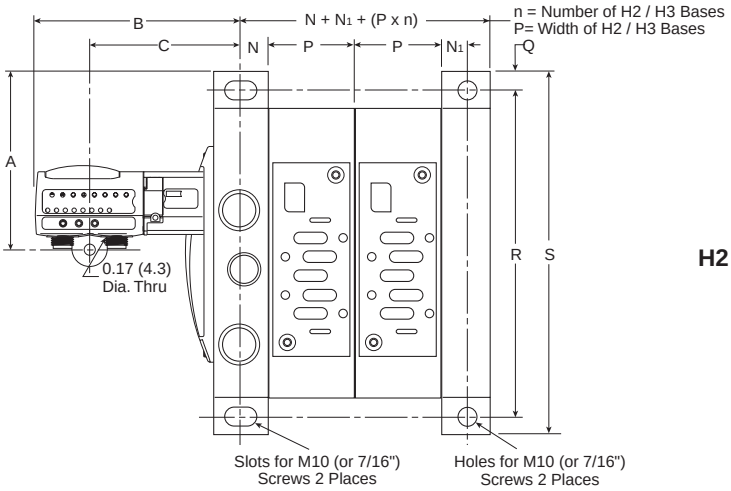

H2 - H3 Manifold Assembly

Dimensions

	A	B	C	N	N1	P	P1	Q	R	S	T	U
HA / HB	2.75 (69.8)	5.61 (142.5)	4.40 (111.8)	.33 (8.4)	1.80 (45.8)	1.61 (40.8)	2.24 (56.8)	.15 (4)	4.32 (110)	5.98 (152)	.63 (16)	5.39 (137)
H1	3.23 (82)	5.13 (130.2)	6.33 (160.9)	.63 (15.9)	.63 (15.9)	1.93 (49)	—	.33 (8.5)	6.50 (165)	7.17 (182)	—	—
H2	3.08 (78.2)	5.13 (130.3)	6.34 (161)	.71 (18)	.59 (15)	2.20 (56)	—	.47 (12)	8.46 (215)	9.41 (239)	—	—
H3	3.31 (84.2)	5.44 (138.2)	6.65 (168.9)	.94 (24)	.65 (16.5)	2.80 (71)	—	.59 (15)	10.43 (265)	11.61 (295)	—	—

Inches (mm)

Parker Hannifin Corporation
Pneumatic Division
Richland, Michigan
www.parker.com/pneumatics

www.comoso.com