(Revised 09-14-2011)

EZ Inline Series

Air Control Valves

Section D

www.parker.com/pneu/EZinline

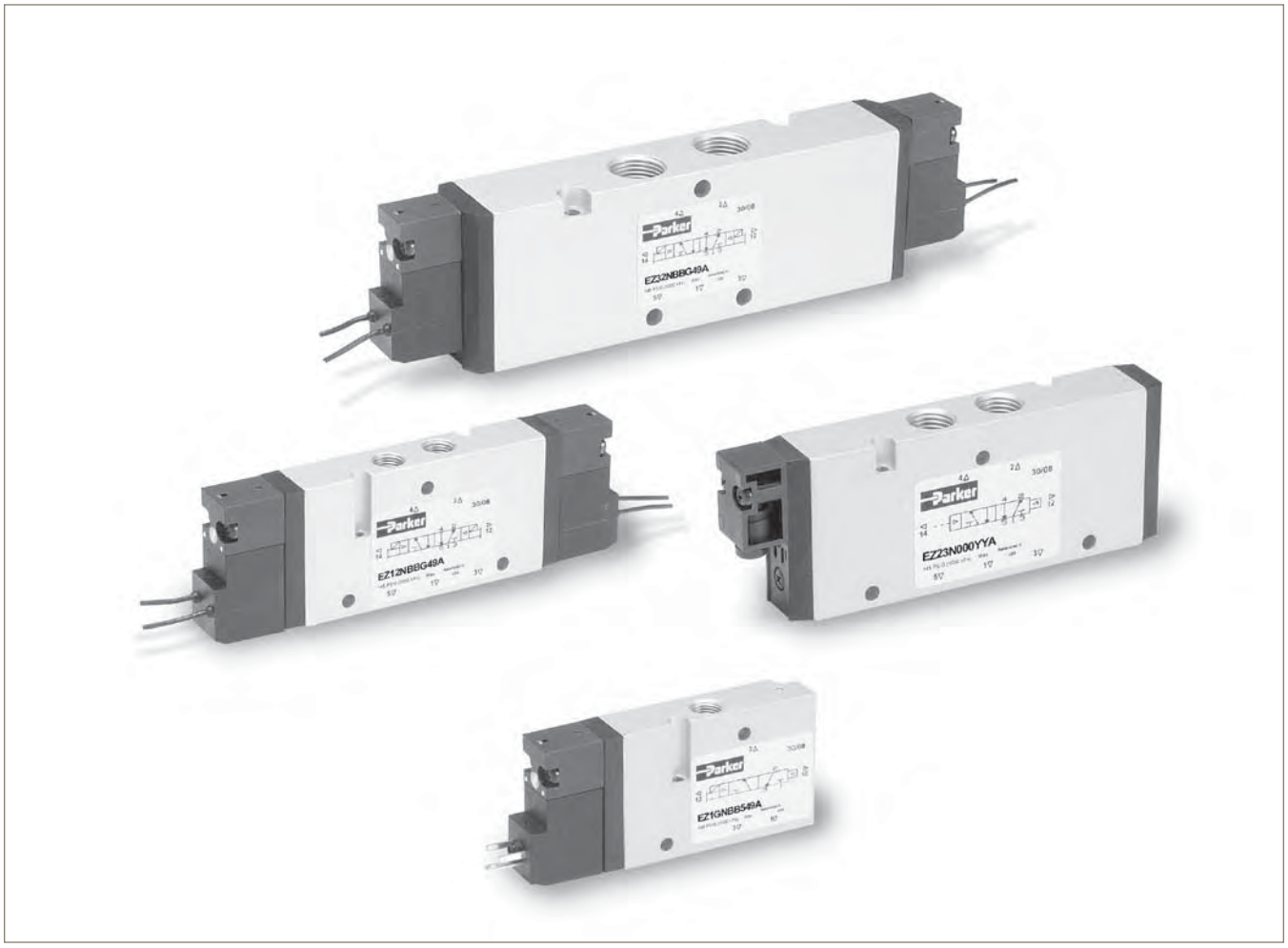

Basic Valve Functions.....D2-D3
Basic Valve Features.....D4-D5
Solenoid Operated Valves
Common Part Numbers.....D6
Model Number Index.....D7
Remote Pilot Operated Valves
Common Part Numbers.....D8
Model Number Index.....D9
IEM Bar Manifolds.....D10
IEM Bar Manifolds Assemblies.....D11
Accessories.....D12
Options & Electrical Connectors.....D13
Technical Information.....D14-D15
Exploded View & Kits.....D16
Technical Information & Weights.....D17
Dimensions
EZ1 3 & 4-Way.....D18
EZ2 3 & 4-Way.....D19
EZ3 3 & 4-Way.....D20
EZ1 Manifold.....D21
EZ2 Manifold.....D22
EZ3 Manifold.....D23

BOLD ITEMS ARE MOST POPULAR.

Parker Hannifin Corporation
Pneumatic Division
Richland. Michigan
www.parker.com/pneumatics

www.comoso.com

Single Solenoid
4-Way, 2-Position

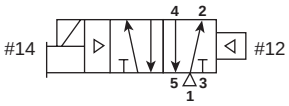

De-energized position – Solenoid operator #14 de-energized. Pressure at inlet port 1 connected to outlet port 2. Outlet port 4 connected to exhaust port 5.

Energized position – Solenoid operator #14 energized. Pressure at inlet port 1 connected to outlet port 4. Outlet port 2 connected to exhaust port 3.

Single Remote Pilot
4-Way, 2-Position

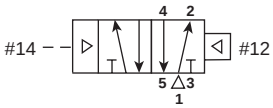

Normal position – Pressure at inlet port 1 connected to outlet port 2. Outlet port 4 connected to exhaust port 5.

Operated position – Maintained air signal at port 14. Pressure at inlet port 1 connected to outlet port 4. Outlet port 2 connected to exhaust port 3.

Double Solenoid
4-Way, 2-Position

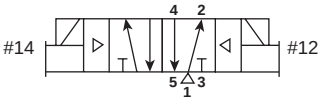

Solenoid operator #14 energized last. Pressure at inlet port 1 connected to outlet port 4. Outlet port 2 connected to exhaust port 3.

Solenoid operator #12 energized last. Pressure at inlet port 1 connected to outlet port 2. Outlet port 4 connected to exhaust port 5.

Double Remote Pilot
4-Way, 2-Position

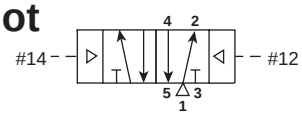

Momentary air signal at port 14 last. Pressure at inlet port 1 connected to outlet port 4. Outlet port 2 connected to exhaust port 3.

Momentary air signal at port 12 last. Pressure at inlet port 1 connected to outlet port 2. Outlet port 4 connected to exhaust port 5.

Double Solenoid
4-Way, 3-Position

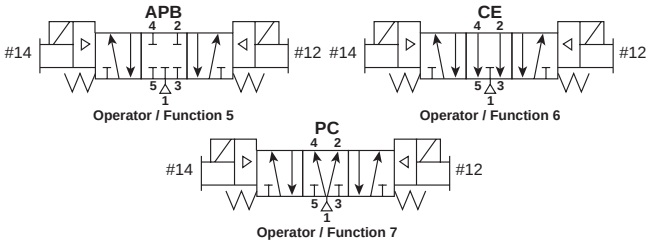

With #12 operator energized – inlet port 1 connected to cylinder port 2, cylinder port 4 connected to exhaust port 5.

With #14 operator energized – inlet port 1 connected to cylinder port 4, cylinder port 2 connected to exhaust port 3.

Function 5: All Ports Blocked
All ports blocked in the center position.

Function 6: Center Exhaust
Cylinder ports 2 and 4 connected to exhaust ports 3 and 5 in center position. Port 1 is blocked.

Function 7: Pressure Center
Pressure port 1 connected to cylinder ports 2 and 4, and exhaust ports 3 and 5 blocked in center position.

Double Remote Pilot
4-Way, 3-Position

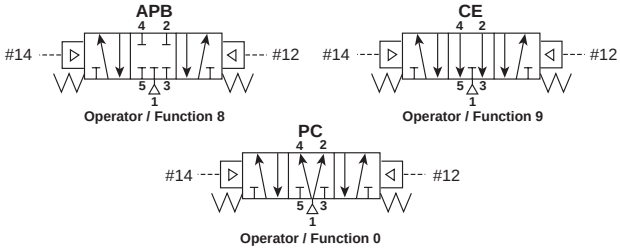

With #12 operator signaled – inlet port 1 connected to cylinder port 2, cylinder port 4 connected to exhaust port 5.

With #14 operator signaled – inlet port 1 connected to cylinder port 4, cylinder port 2 connected to exhaust port 3.

Function 8: All Ports Blocked
All ports blocked in the center position.

Function 9: Center Exhaust
Cylinder ports 2 and 4 connected to exhaust ports 3 and 5 in center position. Port 1 is blocked.

Function 0: Pressure Center
Pressure port 1 connected to cylinder ports 2 and 4, and exhaust ports 3 and 5 blocked in center position.

Parker Hannifin Corporation
Pneumatic Division
Richland. Michigan
www.parker.com/pneumatics

Single Solenoid
3-Way, 2-Position NC (NNP)

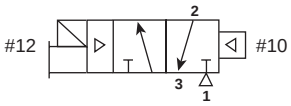

Normally Closed:

De-energized position – Solenoid #12 de-energized. Pressure at inlet port 1 blocked, outlet port 2 connected to exhaust port 3.

Energized position – Solenoid #12 energized. Pressure at inlet port 1 connected to outlet port 2, exhaust port 3 is blocked.

Single Solenoid
3-Way, 2-Position NO (NP)

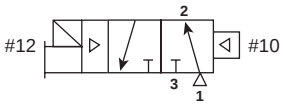

Normally Open:

De-energized position – Solenoid #10 de-energized. Pressure at inlet port 1 connected to outlet port 2, exhaust port 3 is blocked.

Energized position – Solenoid #10 energized. Pressure at inlet port 1 blocked, outlet port 2 connected to exhaust port 3.

3-Way Configuration

Looking at the #1 and #3 ports, the solenoid (or remote operator) is always on the #3 port end.
Different spools are used for NO and NC functions.

Single Remote Pilot
3-Way, 2-Position NC (NNP)

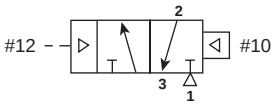

Normally Closed:

Normal position – Pressure at inlet port 1 blocked, outlet port 2 connected to exhaust port 3.

Operated position – Maintained air signal at port 12. Pressure at inlet port 1 connected to outlet port 2, exhaust port 3 is blocked.

Single Remote Pilot
3-Way, 2-Position NO (NP)

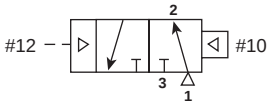

Normally Open:

Normal position – Pressure at inlet port 1 connected to outlet port 2, exhaust port 3 is blocked.

Operated position – Maintained air signal at port 10. Pressure at inlet port 1 blocked, outlet port 2 connected to exhaust port 3.

Definitions

CSA C US ..... Canadian Standards Association and UL Applicable Testing Methods.

CE..... European Directives Marking

IP65 ..... International classification system for sealing effectiveness for enclosures of electrical equipment. IP stands for “Ingress Protection” and the two digits XY stand for: X - protection from solid objects and Y - protection from moisture. IP 65 is protection from dust and water washdown.

NEMA 4..... National standard for electrical enclosure protection. NEMA 4 provides protection against dirt, dust, water hosedown and rain. (Similar to IP 65)

EN175301-803 ... International standard for the 15mm 3-Pin connector. The pin spacing is 8mm.

3-WAY ..... Valve has three ways for air to flow. Also designated as 3/2.

4-WAY ..... Valve has four ways for air to flow. Also designated as 5/2 for 2-Position and 5/3 for 3-Position.

NC ..... Normally Closed. Pressure is blocked when in neutral position. (Normally Non-Passing)

NO ..... Normally Open. Pressure passes thru when in neutral position. (Normally Passing)

IEM ..... Inlet / Exhaust manifold. The inlet and exhaust ports are located in the manifold. The cylinder ports are accessed in the valve.

NLMOR ..... Non-Locking Manual Override. A constant actuation must be maintained for the valve to remain shifted.

LMOR..... Locking Manual Override. Valve remains shifted without constant end user override actuation.

Surge Suppression
Nullifies reverse EMF generated when a solenoid is de-energized.

SCFM ..... Measure of air flow. Standard Cubic Feet per Minute at 68°F and 36% humidity at sea level.

PSIG ..... Pounds per Square Inch measured with a gage. (Catalog pressure reflects PSIG)

PSIA ..... Pounds per Square Inch atmospheric.

kPa ..... Kilopascals. International measure of pressure. 145 PSIG = 1000 kPa

PSIG = 0 → PSIA = 14.7 → In. of Hg = 0 → kPa = 0

Parker Hannifin Corporation
Pneumatic Division
Richland. Michigan
www.parker.com/pneumatics

EZ Inline Features

Robust Design – Wear Compensation System and Balanced Spool Design

Simplified Ordering – Functions Based on Market Demand

Optimized Design – Ultimate Design for Industrial Market

International Offering –Voltage and Port Sizes for all Markets

Global Sourcing – Cost Effective Solution

Applications

Food and Beverage Processing

Household and Personal Care Packaging

Printing Processes

Textile Manufacturing and Packaging

Airport Conveyor Systems

Warehousing, Packaging and Conveying

WCS

*W*ear *C*ompensation *S*ystem

- **Maximum Performance**
  - Low Friction - Lower Operating Pressures
  - Fast Response - Less Wear
- **Long Cycle Life** - Under pressure, radial expansion of the seal occurs to maintain sealing contact with the valve bore.
- **Non-Lube Service** - No lubrication required for continuous valve shifting.
- **Bi-Directional Spool Seals** - Common spool used for any pressure, including vacuum.

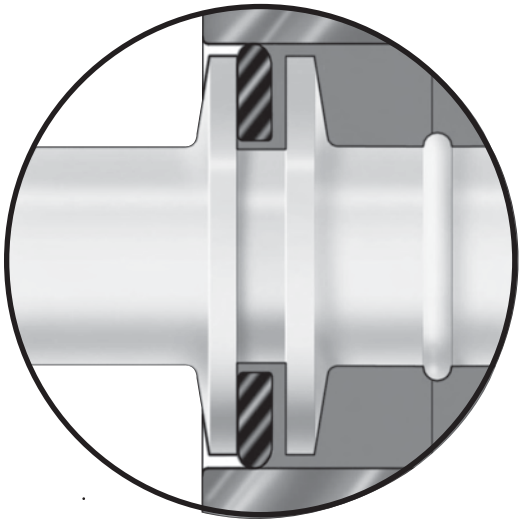

Refer to www.parker.com/pneu/EZinline
Click on Catalog EZ inline

Parker Hannifin Corporation
Pneumatic Division
Richland. Michigan
www.parker.com/pneumatics

www.comoso.com

Flow Characteristics

- EZ1: 0.8 Cv
- EZ2: 1.3 Cv
- EZ3: 2.4 Cv

Operating Pressure

- Vacuum to 145 PSIG

Ports

- EZ1: 1/8 Inch
- EZ2: 1/4 Inch
- EZ3: 3/8 Inch

Mounting

- Inline
- IEM Manifold

Solenoids

- 2.5 W – 15mm Wide
  - Flying Leads
  - 3-Pin EN175301-803 (Formerly DIN 43650C)
- 1.2 W Option Available

Certification / Approval

- CSA, C, US
- Solenoid Approved to be CE marked
- IP 65 Rating / NEMA 4

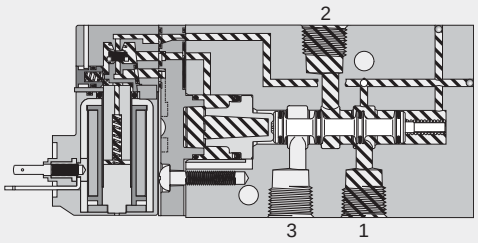

EZ1, 3/2, Single Solenoid Inline
Shown Energized

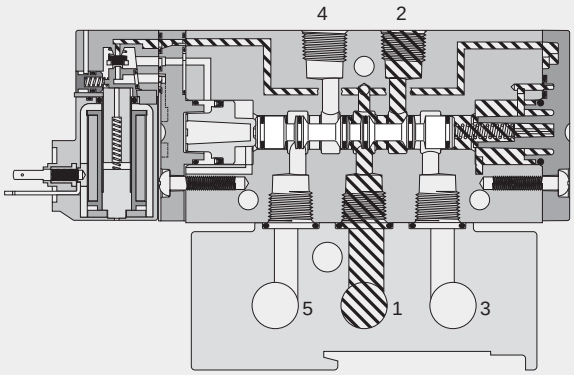

EZ1, 5/2, Single Solenoid Inline
Shown De-Energized

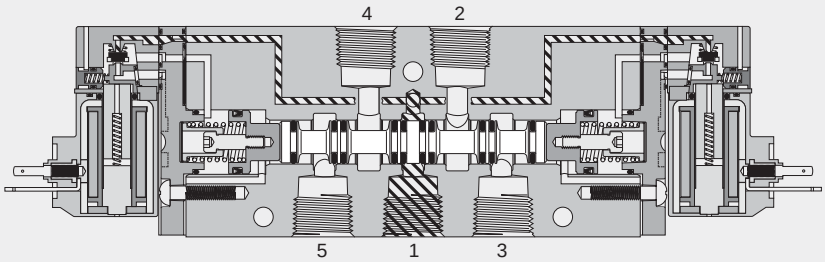

EZ2, 5/3 Double Solenoid Inline
Shown De-Energized

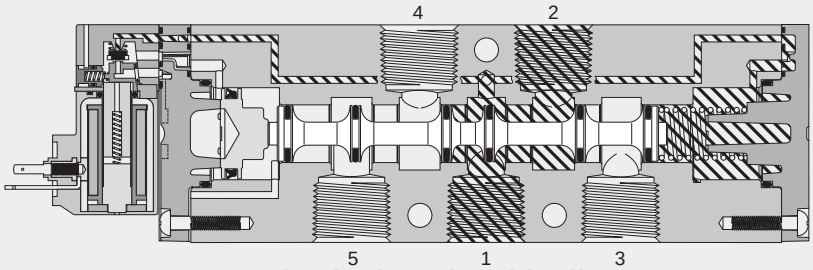

EZ3, 5/2 Single Solenoid Inline
Shown De-Energized

Pressure **Exhaust**

Parker Hannifin Corporation
Pneumatic Division
Richland. Michigan
www.parker.com/pneumatics

Single Solenoid
4-Way, 2-Position

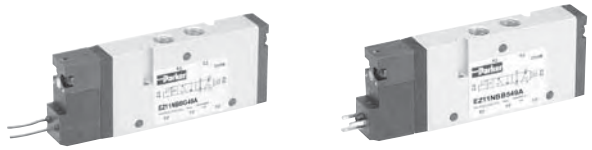

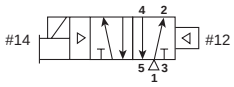

Inline

	Flying Leads	3-Pin			
EZ1	EZ11NBBG53A	EZ11NBB553A	1/8"	120VAC	0.8 Cv
EZ1	EZ11NBBG49A	EZ11NBB549A	1/8"	24VDC	0.8 Cv
EZ2	EZ21NBBG53A	EZ21NBB553A	1/4"	120VAC	1.3 Cv
EZ2	EZ21NBBG49A	EZ21NBB549A	1/4"	24VDC	1.3 Cv
EZ3	EZ31NBBG53A	EZ31NBB553A	3/8"	120VAC	2.4 Cv
EZ3	EZ31NBBG49A	EZ31NBB549A	3/8"	24VDC	2.4 Cv

Double Solenoid
4-Way, 2-Position

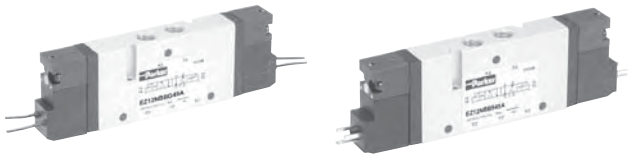

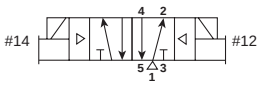

Inline

	Flying Leads	3-Pin			
EZ1	EZ12NBBG53A	EZ12NBB553A	1/8"	120VAC	0.8 Cv
EZ1	EZ12NBBG49A	EZ12NBB549A	1/8"	24VDC	0.8 Cv
EZ2	EZ22NBBG53A	EZ22NBB553A	1/4"	120VAC	1.3 Cv
EZ2	EZ22NBBG49A	EZ22NBB549A	1/4"	24VDC	1.3 Cv
EZ3	EZ32NBBG53A	EZ32NBB553A	3/8"	120VAC	2.4 Cv
EZ3	EZ32NBBG49A	EZ32NBB549A	3/8"	24VDC	2.4 Cv

Single Solenoid
3-Way, 2-Position, NC

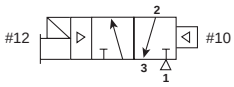

Inline

	Flying Leads	3-Pin			
EZ1	EZ1GNBBG53A	EZ1GNBB553A	1/8"	120VAC	0.8 Cv
EZ1	EZ1GNBBG49A	EZ1GNBB549A	1/8"	24VDC	0.8 Cv
EZ2	EZ2GNBBG53A	EZ2GNBB553A	1/4"	120VAC	1.3 Cv
EZ2	EZ2GNBBG49A	EZ2GNBB549A	1/4"	24VDC	1.3 Cv
EZ3	EZ3GNBBG53A	EZ3GNBB553A	3/8"	120VAC	2.4 Cv
EZ3	EZ3GNBBG49A	EZ3GNBB549A	3/8"	24VDC	2.4 Cv

Double Solenoid
4-Way, 3-Position, APB

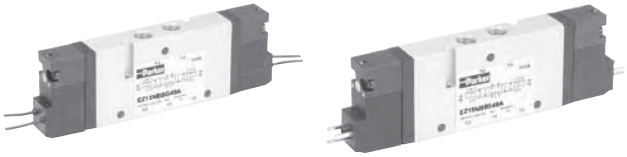

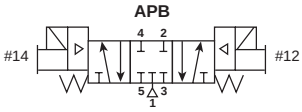

Inline

	Flying Leads	3-Pin			
EZ1	EZ15NBBG53A	EZ15NBB553A	1/8"	120VAC	0.6 Cv
EZ1	EZ15NBBG49A	EZ15NBB549A	1/8"	24VDC	0.6 Cv
EZ2	EZ25NBBG53A	EZ25NBB553A	1/4"	120VAC	1.0 Cv
EZ2	EZ25NBBG49A	EZ25NBB549A	1/4"	24VDC	1.0 Cv
EZ3	EZ35NBBG53A	EZ35NBB553A	3/8"	120VAC	1.9 Cv
EZ3	EZ35NBBG49A	EZ35NBB549A	3/8"	24VDC	1.9 Cv

Parker Hannifin Corporation
Pneumatic Division
Richland. Michigan
www.parker.com/pneumatics

Solenoid Operated Valves

EZ1	1	N	BB	G	49	A

Basic Series		
EZ1 Series	16mm, 1/8"	EZ1
EZ2 Series	19mm, 1/4"	EZ2
EZ3 Series	26mm, 3/8"	EZ3

Operator Function	
3-Way	
Single Solenoid, 2-Position NC - Air Return	**G**
Single Solenoid, 2-Position NO - Air Return	H
Single Solenoid, 2-Position NC - Air Return / Spring Assist	V
Single Solenoid, 2-Position NO - Air Return / Spring Assist	W
4-Way	
Single Solenoid, 2-Position - Air Return	**1**
Double Solenoid, 2-Position	**2**
Double Solenoid, 3-Position - APB	**5**
Double Solenoid, 3-Position - CE	6
Double Solenoid, 3-Position - PC	7
Single Solenoid, 2-Position - Air Return / Spring Assist	E

Voltage	AC		DC
	60Hz	50Hz	
49			24
53	120	110	

Enclosure / Lead Length	
5	15mm 3-Pin DIN EN175301-803
G	**Flying Leads 18"**

Pilot Source / Overrides	
BB	**Internal Pilot Source & Flush - Non-Locking Override**
BC	Internal Pilot Source & Flush Locking Override

Thread Type	
3-Way / 4-Way	
N	**NPT**
G	BSPP
R	BSPT

BOLD OPTIONS ARE MOST POPULAR.

CSA Approved Solenoid Operated Valves

EZ1	1	N	BB	5	49	A	L*

Basic Series		
EZ1 Series	16mm, 1/8"	**EZ1**
EZ2 Series	19mm, 1/4"	**EZ2**
EZ3 Series	26mm, 3/8"	**EZ3**

Operator Function	
3-Way	
Single Solenoid, 2-Position NC - Air Return	G
Single Solenoid, 2-Position NO - Air Return	H
Single Solenoid, 2-Position NC - Air Return / Spring Assist	V
Single Solenoid, 2-Position NO - Air Return / Spring Assist	W
4-Way	
Single Solenoid, 2-Position - Air Return	**1**
Double Solenoid, 2-Position	**2**
Double Solenoid, 3-Position - APB	**5**
Double Solenoid, 3-Position - CE	6
Double Solenoid, 3-Position - PC	7
Single Solenoid, 2-Position - Air Return / Spring Assist	E

* Max pressure: EZ1 145 PSI
EZ2 145 PSI
EZ3 110 PSI

Voltage	AC	DC
	60Hz	
49		24
53	120	
57	240	

Enclosure / Lead Length	
5	15mm 3-Pin DIN EN175301-803

Pilot Source / Overrides	
BB	Internal Pilot Source & Flush - Non-Locking Override
BC	Internal Pilot Source & Flush Locking Override

Thread Type	
3-Way / 4-Way	
N	NPT
G	BSPP
R	BSPT

Parker Hannifin Corporation
Pneumatic Division
Richland. Michigan
www.parker.com/pneumatics

www.comoso.com

Single Remote Pilot
4-Way, 2-Position

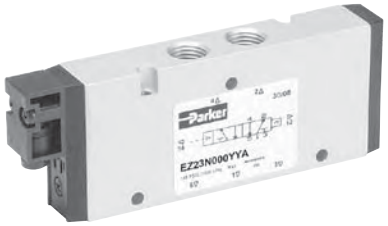

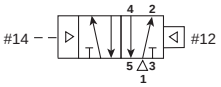

Inline

EZ1	**EZ13N000YYA**	1/8"	16mm	0.8 Cv
EZ2	**EZ23N000YYA**	1/4"	19mm	1.3 Cv
EZ3	**EZ33N000YYA**	3/8"	26mm	2.4 Cv

Double Remote Pilot
4-Way, 2-Position

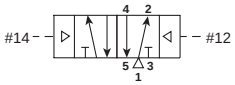

Inline

EZ1	**EZ14N000YYA**	1/8"	16mm	0.8 Cv
EZ2	**EZ24N000YYA**	1/4"	19mm	1.3 Cv
EZ3	**EZ34N000YYA**	3/8"	26mm	2.4 Cv

Single Remote Pilot
3-Way, 2-Position, NC

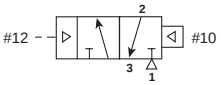

Inline

EZ1	**EZ1KN000YYA**	1/8"	16mm	0.8 Cv
EZ2	**EZ2KN000YYA**	1/4"	19mm	1.3 Cv
EZ3	**EZ3KN000YYA**	3/8"	26mm	2.4 Cv

Double Remote Pilot
4-Way, 3-Position, APB

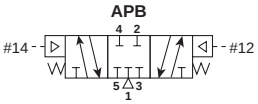

Inline

EZ1	**EZ18N000YYA**	1/8"	16mm	0.6 Cv
EZ2	**EZ28N000YYA**	1/4"	19mm	1.0 Cv
EZ3	**EZ38N000YYA**	3/8"	26mm	1.9 Cv

Parker Hannifin Corporation
Pneumatic Division
Richland. Michigan
www.parker.com/pneumatics

Air Pilot Operated Valves

EZ1	K	N	000	YY	A

Basic Series		
EZ1 Series	16mm, 1/8"	EZ1
EZ2 Series	19mm, 1/4"	EZ2
EZ3 Series	26mm, 3/8"	EZ3

Thread Type	
3-Way / 4-Way	
N	**NPT**
G	BSPP
R	BSPT

Operator Function	
3-Way	
Single Remote Pilot, 2-Position NC - Air Return	**K**
Single Remote Pilot, 2-Position NO - Air Return	L
Single Remote Pilot, 2-Position NC - Air Return / Spring Assist	X
Single Remote Pilot, 2-Position NO - Air Return / Spring Assist	Y
4-Way	
Single Remote Pilot, 2-Position - Air Return	**3**
Double Remote Pilot, 2-Position	**4**
Double Remote Pilot, 3-Position - APB	**8**
Double Remote Pilot, 3-Position - CE	9
Double Remote Pilot, 3-Position - PC	0
Single Remote Pilot, 2-Position - Air Return / Spring Assist	F

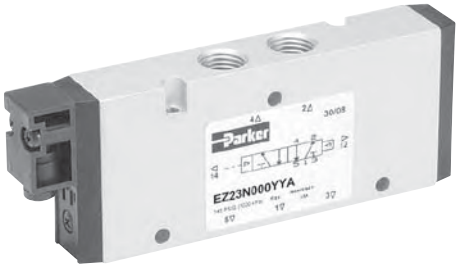

BOLD OPTIONS ARE MOST POPULAR.

Parker Hannifin Corporation
Pneumatic Division
Richland. Michigan
www.parker.com/pneumatics

www.comoso.com

EZ1

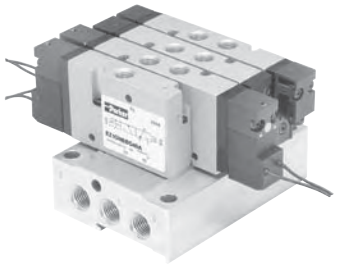

3-Way or 4-Way, NPT	**AAPSMABXN##NP**	## – stations 02 to 12

EZ2

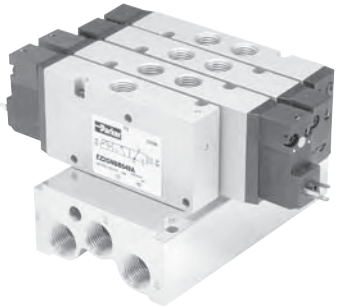

3-Way or 4-Way, NPT	**AAPSMBBXN##NP**	## – stations 02 to 12

EZ3

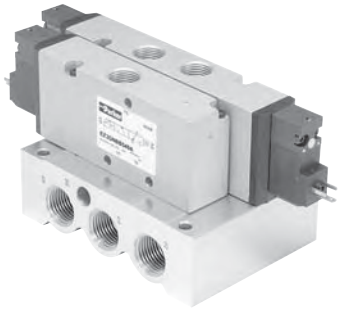

3-Way or 4-Way, NPT	**AAPSMCBXN##NP**	## – stations 02 to 12

IEM Bar Manifold allows for mounting of 3-Way and 4-Way inline valves on the same manifold.

- Utilizes Inline mount.
- Same manifold for 3-Way & 4-Way valves.
- **Kits (PS....) include:** (1) Manifold, Valve Hold Down Bolts, Gaskets.

IEM Bar Manifold Model Number

	PS	M	A	BX	N	02	NP

Manifold	
Manifold Only	Blank
Manifold with Factory Assembled Valves Mounted	AA

Type	
IEM, 3-Way or 4-Way	M

Series	
EZ1 Series	A
EZ2 Series	B
EZ3 Series	C

Port Type	
N	NPT
G	BSPP "G"
R	BSPT "R"

Stations
02
•
•
•
12

Parker Hannifin Corporation
Pneumatic Division
Richland. Michigan
www.parker.com/pneumatics

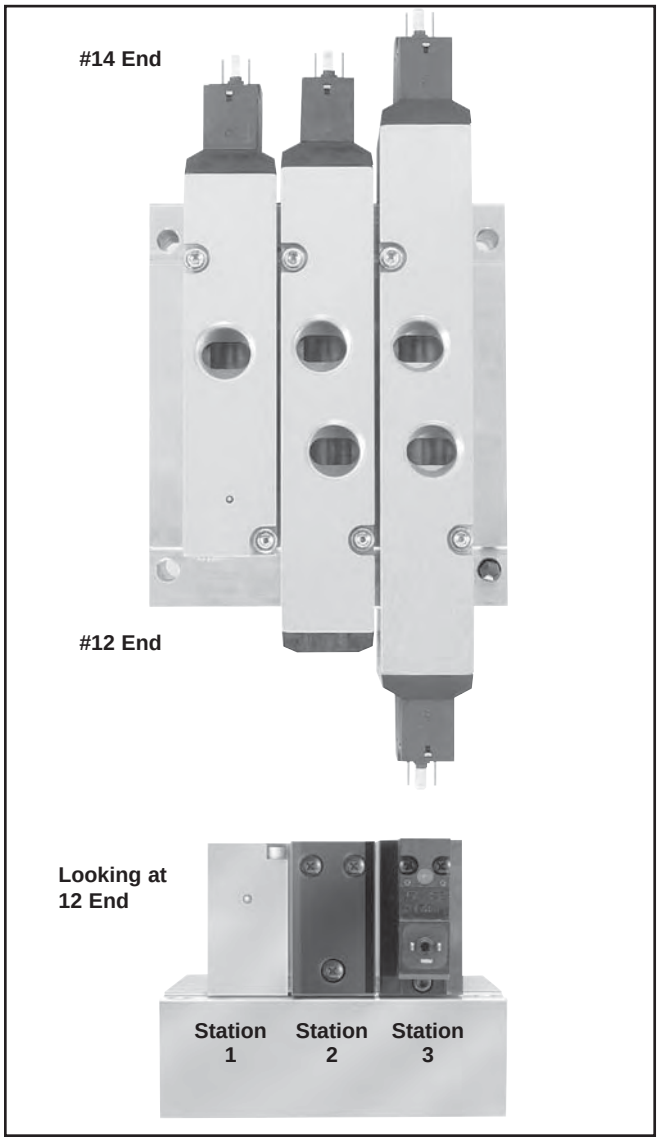

How To Order Aluminum Bar Manifold Assemblies

1. List Manifold Assembly call out. Use AA + the part number of the aluminum bar manifold. This automatically includes the aluminum bar manifold and assembly.

2. List complete valve model number, listing left to right, LOOKING AT THE #12 END of the manifold. The left most station is station 1.

(If a blank station is needed, list the blanking plate part number at the desired station.)

AA PSM***##NP**

Use Aluminum Bar Manifold Kit Numbers from previous pages.

AA Manifold Assembly

Example: Application requires a 3-station "EZ3" manifold with one 3-Way, one 4-Way 2-Position and one 4-Way 3-Position valve assembled.

Qty.	Part No.	Comment
1	AAPSMCBXN03NP	
1	EZ3GNBB549A	Station 1
1	EZ31NBB549A	Station 2
1	EZ35NBB549A	Station 3

EZ2 4-Station Manifold Shown

A. Blanking Plate Kit
B. 3-Way Valve
C. Universal Blanking Plate Kit
D. 4-Way Valve

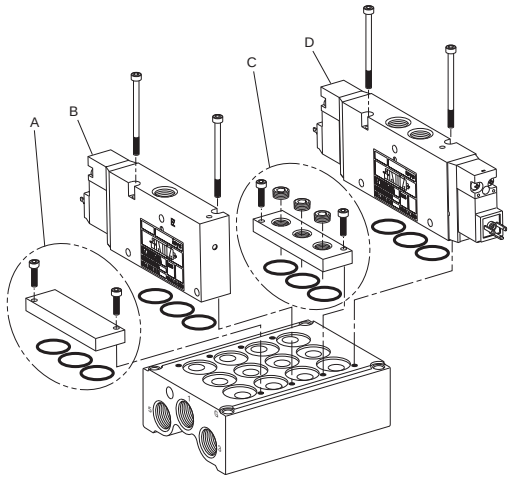

Manifold Mounting Screw Torque Chart		
Valve Size	**Screw Type**	**Torque Nm (in.lbs.)**
EZ1	M2.5	0.7 to 1.1 (6 to 10)
EZ2	M3	1.1 to 1.3 (10 to 12)
EZ3	M4	1.7 to 2.3 (15 to 20)

Valve to Base Mounting Screws and O-Rings are supplied with the Base. Additional Screws and O-rings are available as kits.

Parker Hannifin Corporation
Pneumatic Division
Richland. Michigan
www.parker.com/pneumatics

Blanking Plate

	Kit Number			
	IEM Universal			
	NPT	BSPP "G"	BSPT "R"	Blank
EZ1	**PS5720P**	PS5721P	PS5722P	**PS5769P**
EZ2	**PS5820P**	PS5821P	PS5822P	**PS5869P**
EZ3	**PS5920P**	PS5921P	PS5922P	**PS5969P**

Kit includes:
(1) Plate, (2) Screws, Seal / Gaskets

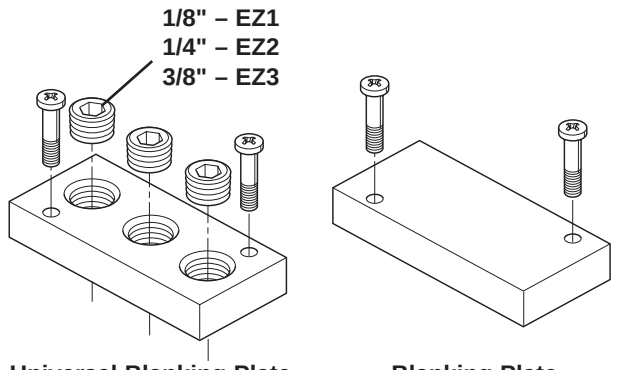

Universal Blanking Plate **Blanking Plate**

DIN Rail Hardware Kit

Series	Length	Part Number
EZ1	6 Feet	AM1DE200

DIN Rail Hardware Kit

Series	IEM Bar
EZ1	PS2990P

Kit includes: (2) Screws, (2) Nuts, (2) Clamps

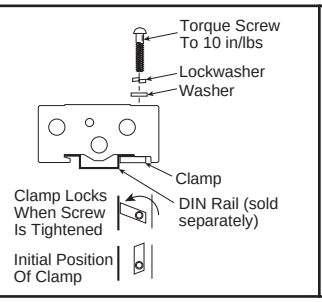

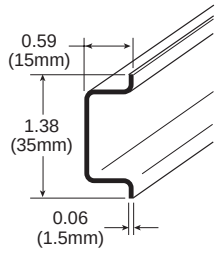

Exhaust Mufflers

Pipe Thread		Part Number
EZ1	1/8" NPT	**P6M-PAB1**
EZ2	1/4" NPT	**P6M-PAB2**
EZ3	3/8" NPT	**P6M-PAB3**
EZ3	1/2" NPT	**P6M-PAB4**

Fittings

W68PLP Male Connector NPT (Nickel Plated)

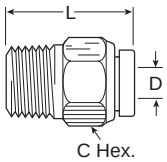

	Part No.	Tube Size	Pipe Thread	C Hex.	L	Flow Dia. D
EZ1	W68PLP-4-2	1/4	1/8	1/2	0.89	0.188
EZ2	W68PLP-6-4	3/8	1/4	5/8	1.08	0.312
EZ3	W68PLP-8-6	1/2	3/8	13/16	1.24	0.344

Parker Hannifin Corporation
Pneumatic Division
Richland. Michigan
www.parker.com/pneumatics

15mm 3-Pin EN175301-803

Connector	Connector with Cord	Description
PS2932BP	PS2932HBP 18 Inches	Unlighted
PS2932BP	PS2932JBP 6 Feet	Unlighted
PS294675BP	PS2946J75BP* 6 Feet	Light – 12VAC or DC
PS294679BP	PS2946J79BP* 6 Feet	Light – 24VAC or DC
PS294683BP	PS2946J83BP* 6 Feet	Light – 110/120VAC
PS294687BP	N/A	Light – 240/230VAC

* LED with surge suppression.

Note: Max ø6.5mm cable size required for connector w/o 6' (2m) cord.
IP65 rated when properly installed.

Engineering Data:
Conductors: 2 Poles Plus Ground
Cable Range (Connector Only): 4 to 6mm (0.16 to 0.24 Inch)
Contact Spacing: 8mm

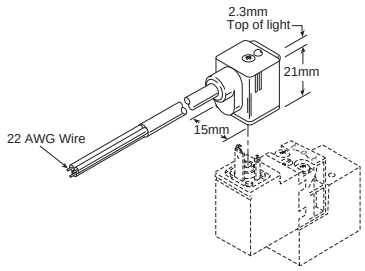

**Molded 6'
Cord Shown**

15mm 3-Pin EN175301-803 to 1/2" Conduit

Connector	Description
PS2998P	1/2" NPTF Conduit – Unlighted with 3' (1m) Leads 20 AWG Wire

Note: Rated up to 250VAC or VDC; 6 Amps
IP65 rated when properly installed.

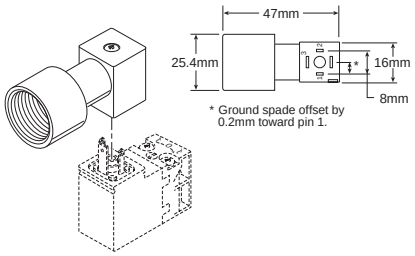

Parker Hannifin Corporation
Pneumatic Division
Richland. Michigan
www.parker.com/pneumatics

www.comoso.com

Cv Calculations

Cv ..... Measure of calculating flow of a valve (or other pneumatic device) that takes into effect the temperature, pressure, pressure drop, and flow. As a rule of thumb. a Cv of 1.0 is 25 SCFM with a 5 PSIG pressure drop.

$$Cv = \frac{\text{Cylinder Area (Sq. In.) (See Table 2)} \times \text{Cylinder Stroke (In.)} \times \text{Compression Factor (Table 1)} \times \text{"A" (Table 1)}}{\text{Stroke Time (sec.)} \times 28.8}$$

Table 1
Compression Factors and "A" Constants

Inlet Pressure (PSIG)	Compression Factor	"A" Constants for Various Pressure Drop*		
		2 PSI △ P	5 PSI △ P	10 PSI △ P
10	1.6	.152	.103	
20	2.3	.126	.084	.065
30	3.0	.111	.073	.055
40	3.7	.100	.065	.048
50	4.4	.091	.059	.044
60	5.1	.085	.055	.040
70	5.7	.079	.051	.037
80	6.4	.075	.048	.035
90	7.1	.071	.046	.033
100	7.8	.068	.044	.032
110	8.5	.065	.042	.030
120	9.2	.063	.040	.029
130	9.9	.061	.039	.028
140	10.6	.058	.037	.027
150	11.2	.057	.036	.026
160	11.9	.055	.035	.025
170	12.6	.053	.034	.024
180	13.3	.052	.033	.024
190	14.0	.051	.032	.023
200	14.7	.050	.032	.023

Note: Use "A" constant at 5 PSI △ P for most applications. On very critical applications. use "A" at 2 PSI △ P. You will find in many cases, a 10 PSI △ P is not detrimental, and can save money and mounting space.

* Tabulated values are the solution of $\frac{1}{22.48}\sqrt{\frac{GT}{(P_1 - P_2)\,P_2}}$ where T is for 68°F and G =1 for Air.

Flow Rating (Cv)

Size	Port Size	Mounting Style	2-Position	3-Position
EZ1	1/8" Ports	Inline	0.8	0.6
EZ2	1/4" Ports	Inline	1.3	1.0
EZ3	3/8" Ports	Inline	2.4	1.9

ANSI / (NFPA) T3.21.3-1990 standard for Cv measurement.

Table 2
Effective Square-Inch Areas for Standard-Bore-Size Cylinders

Bore Size	Cylinder Area (Sq. In.)	Bore Size	Cylinder Area (Sq. In.)
3/4"	.44	4"	12.57
1"	.79	4-1/2"	15.90
1-1/8"	.99	5"	19.64
1-1/4"	1.23	6"	28.27
1-1/2"	1.77	7"	38.48
1-3/4"	2.41	8"	50.27
2"	3.14	10"	78.54
2-1/2"	4.91	12"	113.10
3-1/4"	8.30	14"	153.94
3-5/8"	10.32		

Temperature Rating

5°F to 120°F (-15°C to 49°C) ambient.

Parker Hannifin Corporation
Pneumatic Division
Richland. Michigan
www.parker.com/pneumatics

Response Time

Valve Size	Port Size	0 Cu. In. Test Chamber	
		Fill	Exhaust
2-Position Single Solenoid / Internal Air Return			
EZ1	1/8"	21	24
EZ2	1/4"	24	26
EZ3	3/8"	35	36
2-Position Single Solenoid Spring / Air Return			
EZ1	1/8"	20	23
EZ2	1/4"	21	24
EZ3	3/8"	34	34
2-Position Double Solenoid			
EZ1	1/8"	20	23
EZ2	1/4"	21	23
EZ3	3/8"	31	33
3-Position Double Solenoid			
EZ1	1/8"	25	22
EZ2	1/4"	23	23
EZ3	3/8"	20	22

Average Fill Time (ms milliseconds): With 100 PSIG supply, time required to fill from 0-90 PSIG and exhaust from 100 PSIG to 10 PSIG is measured from instant of energizing, or de-energizing 120V/60Hz solenoid. Times shown are average.

Solenoid Information

(Solenoids are rated for continuous duty.)

Voltage				Power Consumption	Holding (Amps)
Code	AC		DC		
	60Hz	50Hz			
49	—	—	24	2.5W	.022
53	120	110	—	3.0VA	.013
57	240	230	—	3.0VA	.010

Note: Voltage rated +10 / -10%.

Solenoid Information

(CSA Approved Valves)

Voltage				Power Consumption	Holding (Amps)
Code	AC		DC		
	60Hz	50Hz			
49	—	—	24	1.2W	.049
53	120	110	—	1.6VA	.013
57	240	230	—	1.6VA	.007

Note: Voltage rated +10 / -15%.

Operating Pressures:

Maximum: 145 PSIG (10.0 bar)*
Minimum: see chart

Operator / Function		EZ1	EZ2	EZ3
1, 3, G, H, K, L	Single Operator, Air Return	30 (2.1)	25 (1.7)	20 (1.4)
2	Double Solenoid Operator, 2-Position	30 (2.1)	25 (1.7)	20 (1.4)
4, 8, 9, 0	Double Remote Pilot Operator	Vacuum	Vacuum	Vacuum
5, 6, 7	Double Solenoid Operator, 3-Position	35 (2.4)	35 (2.4)	30 (2.0)
E, F, V, W, X, Y	Single Operator, Spring / Air Return	35 (2.4)	35 (2.4)	35 (2.4)

Remote Pilot Signal – 35 to 145 PSIG (3.1 to 10 bar)
* Maximum Pressure for EZ3, CSA approved valve is 110 PSIG (7.6 bar)

Parker Hannifin Corporation
Pneumatic Division
Richland. Michigan
www.parker.com/pneumatics

EZ1 **EZ2** **EZ3**

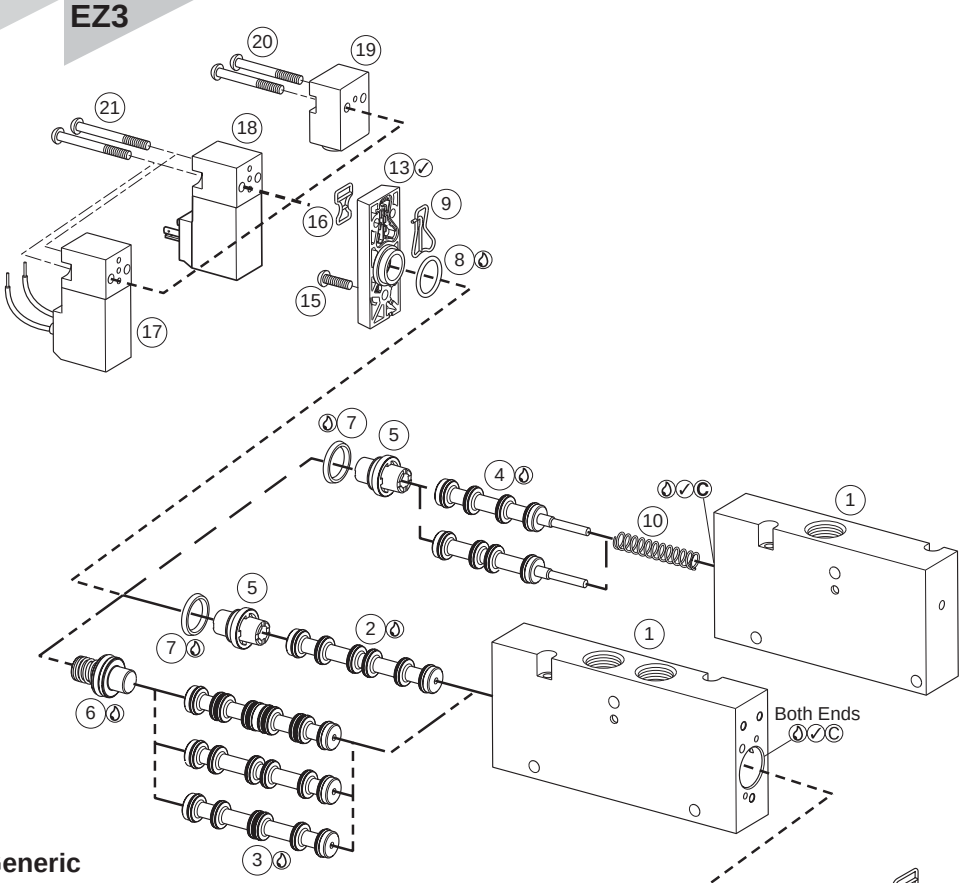

Legend

- Generic
- 2-Position, 4-Way, Double or Single Operator
- 3-Position, 4-Way Valves
- 3-Way Valves

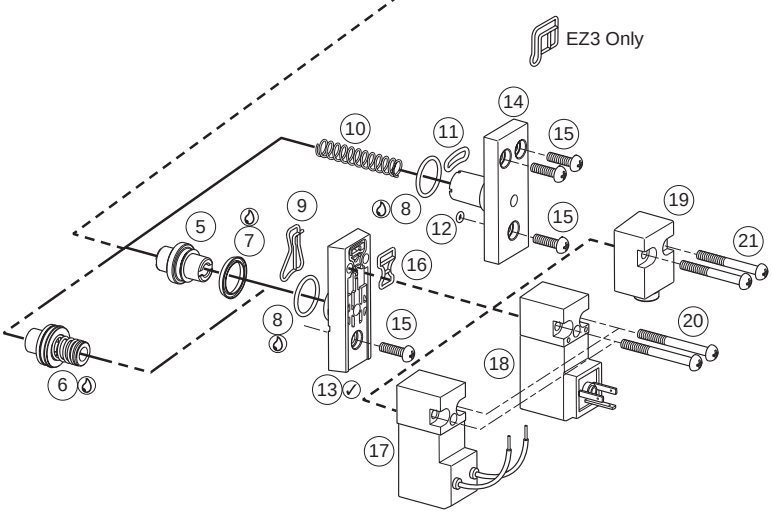

EZ2 Valve Shown

Parts List

Item	Description	Kit Info
1	Valve Body	No Kit
2	Spool Assembly, 2-Position	4-Way, 2-Pos. Kit
3	Spool Assembly, 3-Position	4-Way, 3-Pos. Kit
4	Spool Assembly, 3-Way	3-Way, 2-Pos. Kit
5	Piston, 2-Position	No Kit
6	Piston Assembly, 3-Position	No Kit
7	Lip Seal	All Spool Kits
8	O-Ring	No Kit
9	Gasket, 13 End Cap	No Kit
10	Spring	4-Way, 2-Pos. Kit
11	O-Ring, 14 End Cap	No Kit
12	O-Ring	No Kit
13	End Cap, Solenoid Operator	No Kit
14	End Cap, 12 End Return	No Kit
15	Screw, End Cap	No Kit
16	Gasket, Solenoid	Solenoid Kits w/ Air Pilot Kit
17	Solenoid Operator, Flying Lead	Solenoid Kit, Flying Lead
18	Solenoid Operator, DIN	Solenoid Kit, 3-Pin
19	Remote Pilot Adapter	Air Pilot Kit
20	Screw, Solenoid	Solenoid Kits
21	Screw, Remote Pilot Adapter	Remote Pilot Kit
22	Grease Tube, (not shown)	All Spool Kits
23	Instruction Sheet, (not shown)	All Kits (No. V457P)

Note: See Kits on following page.

Lightly grease with provided lubricant.

Inspect for nicks, scratches, and surface imperfections. If present, reduced service life is probable and future replacement should be planned.

Clean with lint-free cloth.

Parker Hannifin Corporation
Pneumatic Division
Richland. Michigan
www.parker.com/pneumatics

EZ1 EZ2 EZ3

Spool Kits	EZ1	EZ2	EZ3	Items Included
4-Way, 2-Pos	PS5701	PS5801	PS5901	2, 7, 10, 22, 23
4-Way, 3-Pos APB	PS5702	PS5802	PS5902	3, 7, 22, 23
4-Way, 3-Pos CE	PS5703	PS5803	PS5903	3, 7, 22, 23
4-Way, 3-Pos PC	PS5704	PS5804	PS5904	3, 7, 22, 23
3-Way, 2-Pos NC	PS5771	PS5871	PS5971	4, 7, 10, 22, 23
3-Way, 2-Pos NO	PS5772	PS5872	PS5972	4, 7, 10, 22, 23

Manifold Kits	EZ1	EZ2	EZ3	Items Included
Valve to Base	PS5784	PS5884	PS5984	O-Ring (15), Screws (10)

Solenoid Kits 2.5W Coils	Non-Locking Overide			
	3 Pin EN175301803	Items Included	Flying Leads	Items Included
24VDC (49)	PS575B49P	16, 18, 20, 23	PS57GB49P	16, 17, 20, 23
120VAC (53)	PS575B53P	16, 18, 20, 23	PS57GB53P	16, 17, 20, 23
	Locking Override			
24VDC (49)	PS575C49P	16, 18, 20, 23	PS57GC49P	16, 17, 20, 23
120VAC (53)	PS575C53P	16, 18, 20, 23	PS57GC53P	16, 17, 20, 23

Solenoid Kits CSA Approved*	Non-Locking Overide			
	3 Pin EN175301803	Items Included	Flying Leads	Items Included
24VDC (49)	PS585B49P	16, 18, 20, 23	PS58GB49P	16, 17, 20, 23
120VAC (53)	PS585B53P	16, 18, 20, 23	PS58GB53P	16, 17, 20, 23
240VAC (57)	PS585B57P	16, 18, 20, 23	PS58GB57P	16, 17, 20, 23
	Locking Override			
24VDC (49)	PS585C49P	16, 18, 20, 23	PS58GC49P	16, 17, 20, 23
120VAC (53)	PS585C53P	16, 18, 20, 23	PS58GC53P	16, 17, 20, 23
240VAC (57)	PS585C57P	16, 18, 20, 23	PS58GC57P	16, 17, 20, 23

Remote Pilot Kit	EZ1	EZ2	EZ3	Items Included
Air Pilot Conversion	PS5711	PS5711	PS5711	16, 19, 21

* Only applicable with CSA approved valves.

Materials of Construction

Body ..... Anodized Aluminum
End Caps..... Nylon Polymer - 33% Glass Filled
Seals..... Nitrile
Solenoid..... Polyamide
Spool ..... Aluminum

Product Shipping Weights

Series	Single 4-Way Solenoid Valve	4-Way, 3-Position Valve
EZ1	0.35	0.53
EZ2	0.50	0.60
EZ3	0.85	1.17

Weights are in pounds and are approximate.

Parker Hannifin Corporation
Pneumatic Division
Richland. Michigan
www.parker.com/pneumatics

EZ1

Single & Double Operators – 4-Way Inline

Solenoid

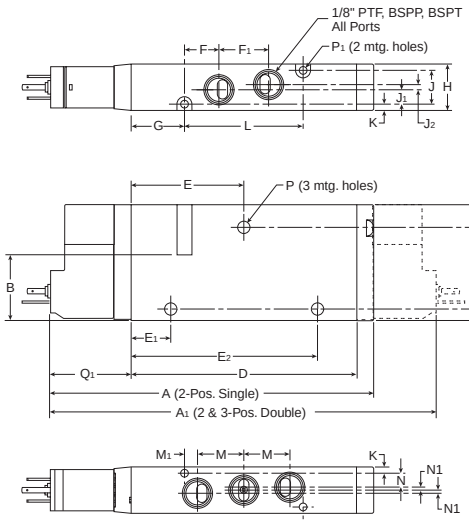

Remote Pilot

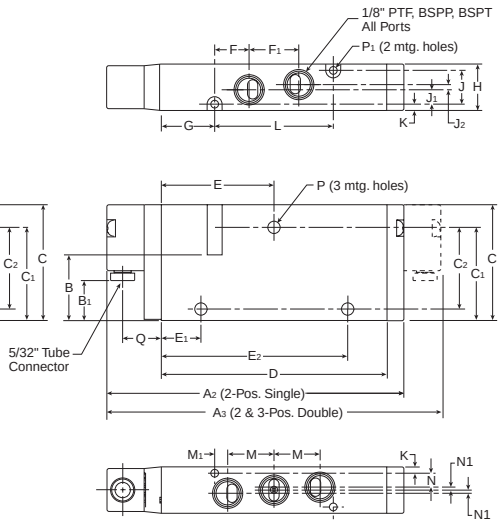

Note: For CSA Approved valves, add .09 (2.5mm) to dimension A and .19 (5mm) to dimension A_1.

EZ1 4-Way Inline

A 4.49 (114)	**A_1** 5.41 (137.4)	**A_2** 4.08 (103.6)	**A_3** 4.59 (116.6)
B .94 (23.9)	**B_1** .65 (16.0)	**C** 1.67 (42.4)	**C_1** 1.36 (34.5)
C_2 1.16 (29.5)	**D** 3.09 (78.6)	**E** 1.55 (39.3)	**E_1** .54 (13.8)
E_2 2.55 (64.8)	**F** .47 (12)	**F_1** 69 (17.4)	**G** .73 (18.6)
H .64 (16.2)	**J** .46 (11.8)	**J_1** .20 (5)	**J_2** .07 (1.8)
K .09 (2.2)	**L** 1.63 (41.4)	**M** .64 (16.2)	**M_1** .18 (4.5)
N .19 (4.8)	**N_1** .04 (1.1)	**P** .17 (4.3)	**P_1** .11 (2.7)
Q .53 (13.5)	**Q_1** 1.16 29.4)		

Inches (mm)

EZ1

Single Operator – 3-Way Inline

Solenoid

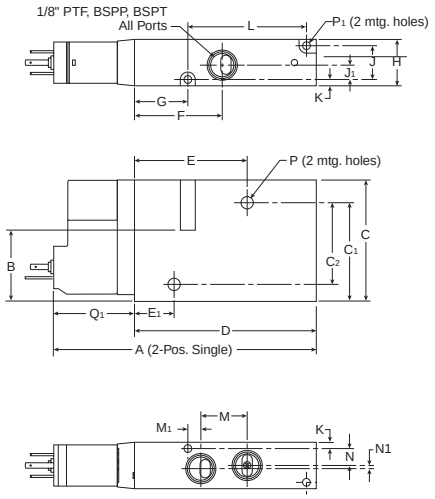

Remote Pilot

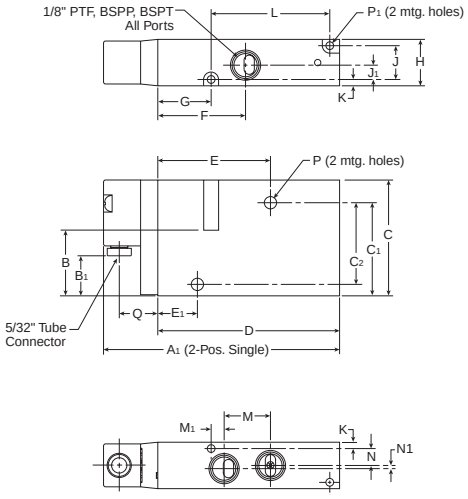

Note: For CSA Approved valves, add .09 (2.5mm) to dimension A.

EZ1 3-Way Inline

A 3.65 (92.8)	**A_1** 3.24 (82.4)	**B** .90 (23.9)	**B_1** .63 (16)
C 1.67 (42.4)	**C_1** 1.36 (34.5)	**C_2** 1.16 (29.5)	**D** 2.50 (63.4)
E 1.55 (39.3)	**E_1** .54 (13.8)	**F** 1.20 (30.6)	**G** .73 (18.6)
H .64 (16.2)	**J** .46 (11.8)	**J_1** .20 (5)	**K** .09 (2.2)
L 1.63 (41.4)	**M** .64 (16.2)	**M_1** .18 (4.5)	**N** .23 (5.9)
N_1 .04 (1.1)	**P** .17 (4.3)	**P_1** .11 (2.7)	**Q** .53 (13.5)
Q_1 1.16 (29.4)			

Inches (mm)

Parker Hannifin Corporation
Pneumatic Division
Richland. Michigan
www.parker.com/pneumatics

www.comoso.com

EZ2

Single & Double Operators – 4-Way Inline

Solenoid

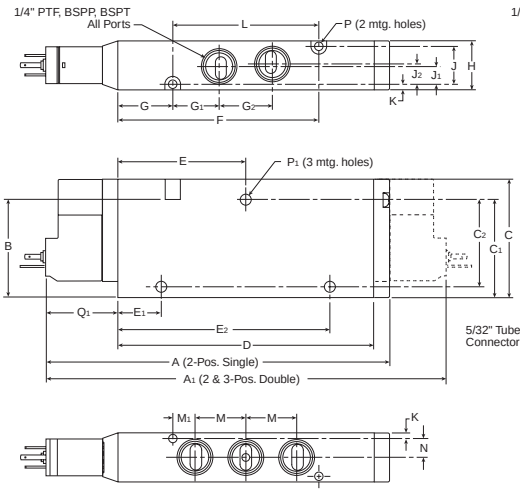

Remote Pilot

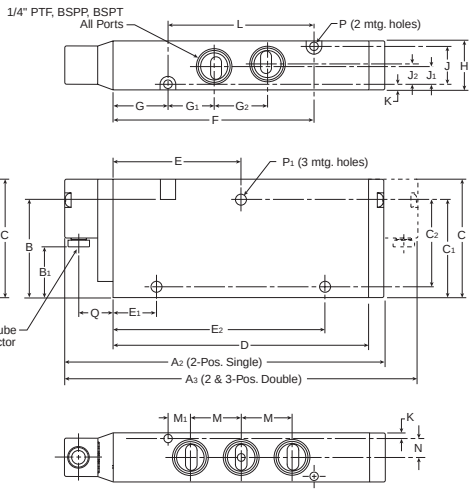

Note: For CSA Approved valves, add .09 (2.5mm) to dimension A and .19 (5mm) to dimension A_1.

EZ2 4-Way Inline

A 5.34 (135.6)	**A_1** 6.26 (159)	**A_2** 4.93 (125.2)	**A_3** 5.44 (138.2)
B 1.51 (38.4)	**B_1** .79 (20)	**C** 1.83 (46.4)	**C_1** 1.43 (36.4)
C_2 1.26 (32)	**D** 3.94 (100.2)	**E** 1.97 (50.1)	**E_1** .67 (17.1)
E_2 3.27 (83.1)	**F** 3.10 (78.7)	**G** .85 (21.5)	**G_1** .71 (18.1)
G_2 .82 (20.9)	**H** .76 (19.2)	**J** .58 (14.8)	**J_1** .27 (6.9)
J_2 .31 (7.9)	**K** .09 (2.2)	**L** 2.25 (57.2)	**M** .78 (19.9)
M_1 .34 (8.7)	**N** .27 (7.4)	**P** .13 (3.3)	**P_1** .17 (4.3)
Q .53 (13.5)	**Q_1** 1.16 (29.4)		

Inches (mm)

EZ2

Single Operator – 3-Way Inline

Solenoid

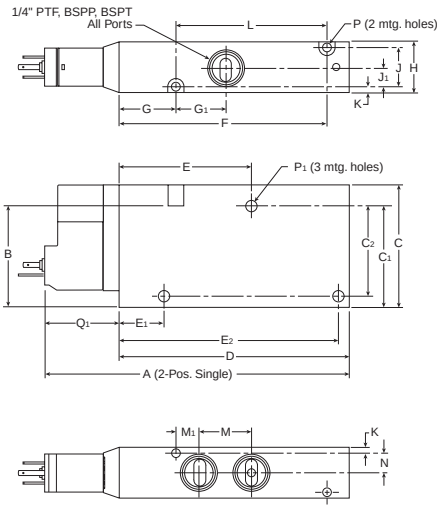

Remote Pilot

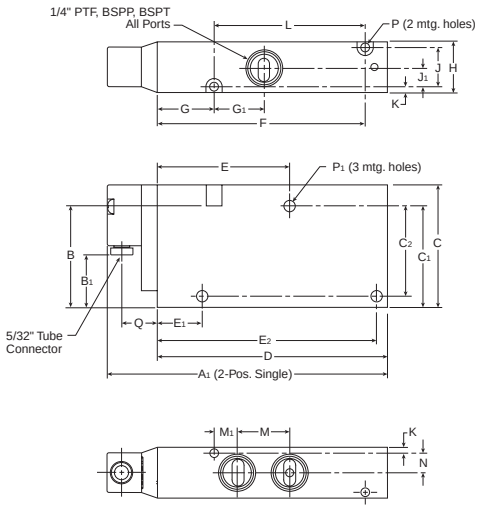

Note: For CSA Approved valves, add .09 (2.5mm) to dimension A.

EZ2 3-Way Inline

A 4.57 (116.5)	**A_1** 4.18 (106.1)	**B** 1.51 (38.4)	**B_1** .79 (20)
C 1.83 (46.4)	**C_1** 1.43 (36.4)	**C_2** 1.26 (32)	**D** 3.43 (87.1)
E 1.97 (50.1)	**E_1** .67 (17.1)	**E_2** 2.60 (66)	**F** 3.10 (78.7)
G .85 (21.5)	**G_1** .74 (18.8)	**H** .76 (19.2)	**J** .58 (14.8)
J_1 .27 (6.9)	**K** .09 (2.2)	**L** 2.25 (57.2)	**M** .78 (19.9)
M_1 .34 (8.7)	**N** .29 (7.4)	**P** .13 (3.3)	**P_1** .17 (4.3)
Q .53 (13.5)	**Q_1** 1.16 (29.4)		

Inches (mm)

Parker Hannifin Corporation
Pneumatic Division
Richland. Michigan
www.parker.com/pneumatics

www.comoso.com

EZ3

Single & Double Operators – 4-Way Inline

Solenoid

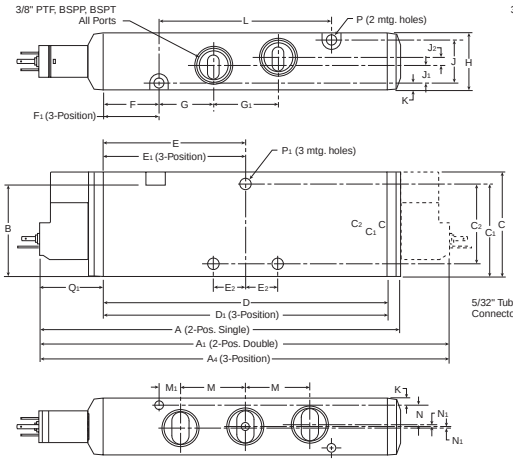

Remote Pilot

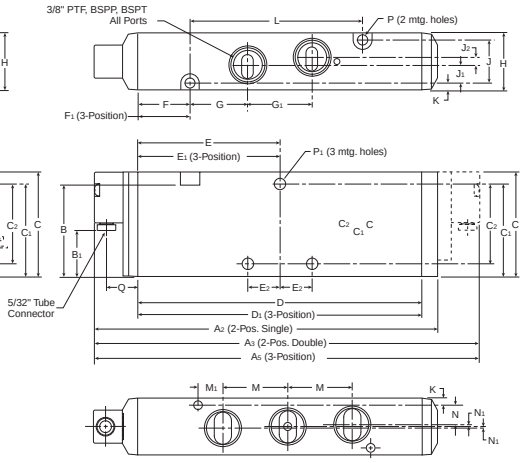

Note: For CSA Approved valves, add .09 (2.5mm) to dimension A and .19 (5mm) to dimension A_1.

EZ3 4-Way Inline

A 6.56 (166.7)	**A_1** 7.52 (191.1)	**A_2** 6.15 (156.3)	**A_3** 6.70 (170.3)
A_4 8.46 (214.9)	**A_5** 7.64 (194.1)	**B** 1.65 (42)	**B_1** .85 (21.6)
C 1.89 (48)	**C_1** 1.67 (42.5)	**C_2** 1.43 (36.5)	**D** 5.13 (130.3)
D_1 6.06 (154.1)	**E** 2.57 (65.2)	**E_1** 3.04 (77.1)	**E_2** .58 (14.7)
F 1.01 (25.7)	**F_1** 1.48 (37.6)	**G** .98 (24.8)	**G_1** 1.16 (29.4)
H 1.02 (26)	**J** .77 (19.6)	**J_1** .31 (8)	**J_2** .15 (3.7)
K .13 (3.2)	**L** 3.11 (79)	**M** 1.17 (29.7)	**M_1** .39 (9.8)
N .36 (9.1)	**N_1** .03 (.8)	**P** .17 (4.4)	**P_1** .21 (5.3)
Q .57 (14.5)	**Q_1** 1.19 (30.4)		

Inches (mm)

EZ3

Single Operators – 3-Way Inline

Solenoid

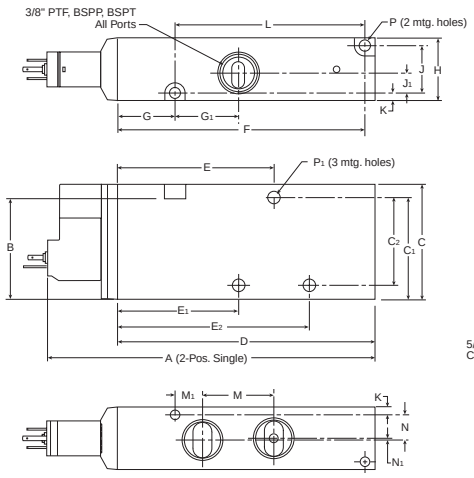

Remote Pilot

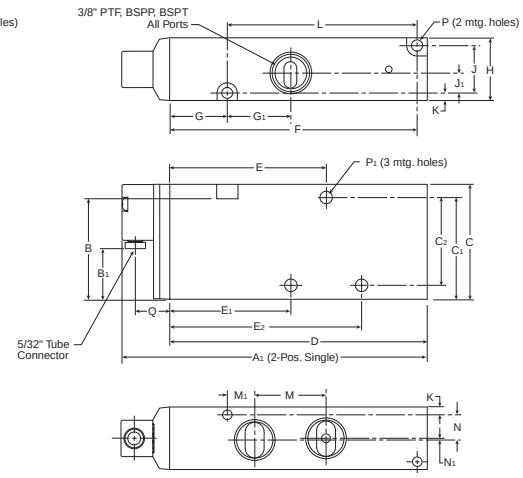

Note: For CSA Approved valves, add .09 (2.5mm) to dimension A.

EZ3 3-Way Inline

A 5.42 (137.7)	**A_1** 5.01 (127.3)	**B** 1.65 (42)	**B_1** .85 (21.6)
C 1.89 (48)	**C_1** 1.67 (42.5)	**C_2** 1.44 (36.5)	**D** 4.22 (107.3)
E 2.57 (65.2)	**E_1** 1.99 (50.5)	**E_2** 3.15 (79.9)	**F** 4.06 (103)
G .94 (24)	**G_1** 1.03 (26.5)	**H** 1.02 (26)	**J** .77 (19.6)
J_1 .33 (8.3)	**K** .13 (3.2)	**L** 3.11 (79)	**M** 1.17 (29.7)
M_1 .45 (11.5)	**N** .42 (10.6)	**N_1** .03 (.8)	**P** .17 (4.4)
P_1 .21 (5.3)	**Q** .57 (14.5)	**Q** 1.20 (30.4)	

Inches (mm)

Parker Hannifin Corporation
Pneumatic Division
Richland. Michigan
www.parker.com/pneumatics

EZ1

EZ1 Manifold

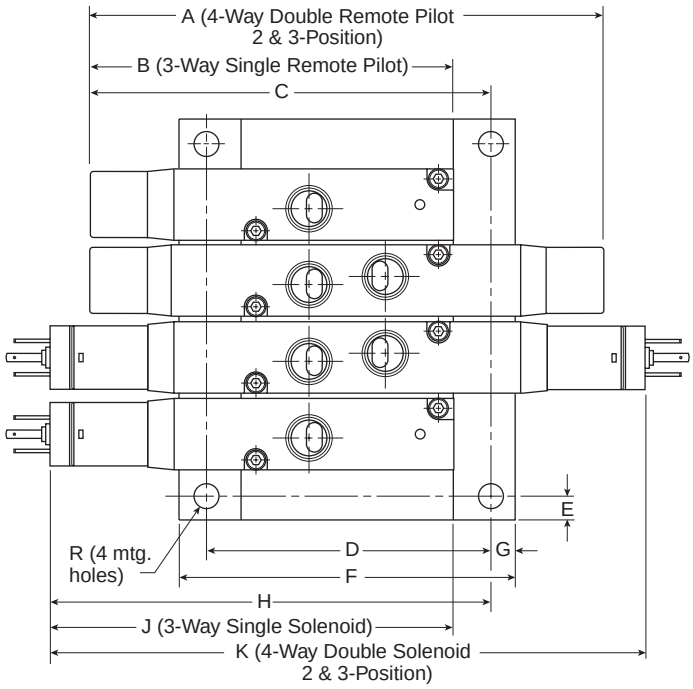

EZ1 Manifold

A 4.59 (116.6)	**B** 3.24 (82.4)	**C** 3.58 (90.9)	**D** 2.54 (64.5)
E .20 (5)	**F** 3.00 (76.2)	**G** .20 (5)	**H** 4.11 (104.3)
J 3.75 (95.8)	**K** 5.41 (137.4)	**L** 2.95 (74.9)	**M** 1.28 (32.5)
N .68 (17.3)	**P** 1.11 (28.2)	**Q** 1.54 (39)	**R** .25 (6.3)

Inches (mm)

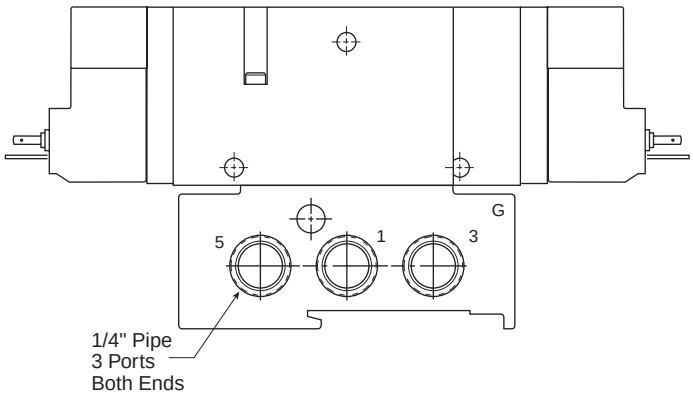

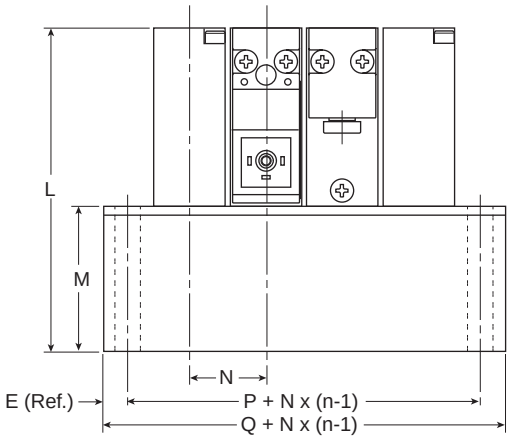

n = Number of Stations

Parker Hannifin Corporation
Pneumatic Division
Richland. Michigan
www.parker.com/pneumatics

www.comoso.com

EZ2

EZ2 Manifold

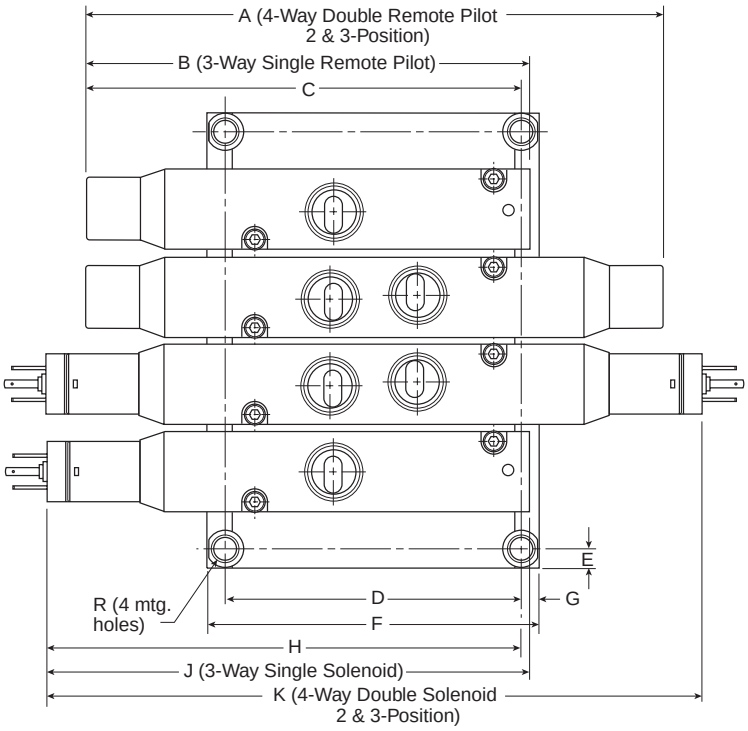

EZ2 Manifold

A	B	C	D
5.44 (138.2)	4.18 (106.1)	4.11 (104.4)	2.78 (70.6)
E	**F**	**G**	**H**
.18 (4.6)	3.12 (79.3)	.17 (4.3)	4.52 (114.8)
J	**K**	**L**	**M**
4.57 (116.5)	6.26 (159)	3.27 (83)	1.44 (36.6)
N	**P**	**Q**	**R**
.81 (20.5)	1.48 (37.6)	1.84 (46.8)	.22 (5.5)

Inches (mm)

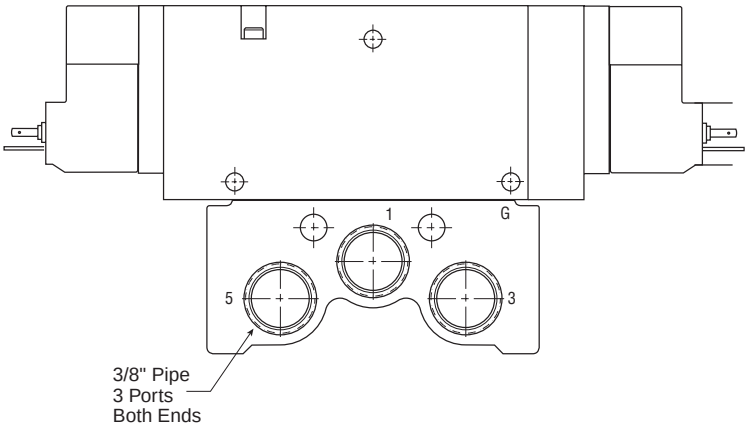

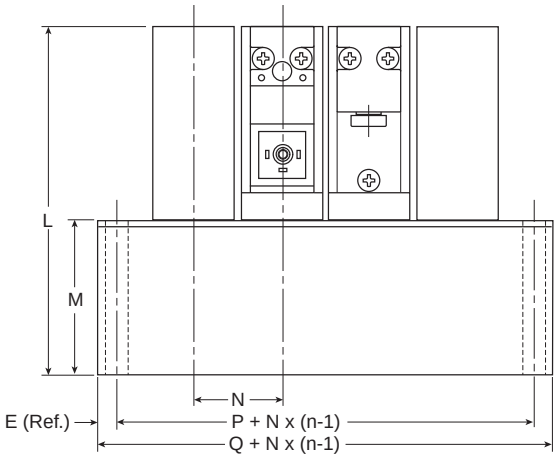

n = Number of Stations

Parker Hannifin Corporation
Pneumatic Division
Richland. Michigan
www.parker.com/pneumatics

www.comoso.com

EZ3

EZ3 Manifold

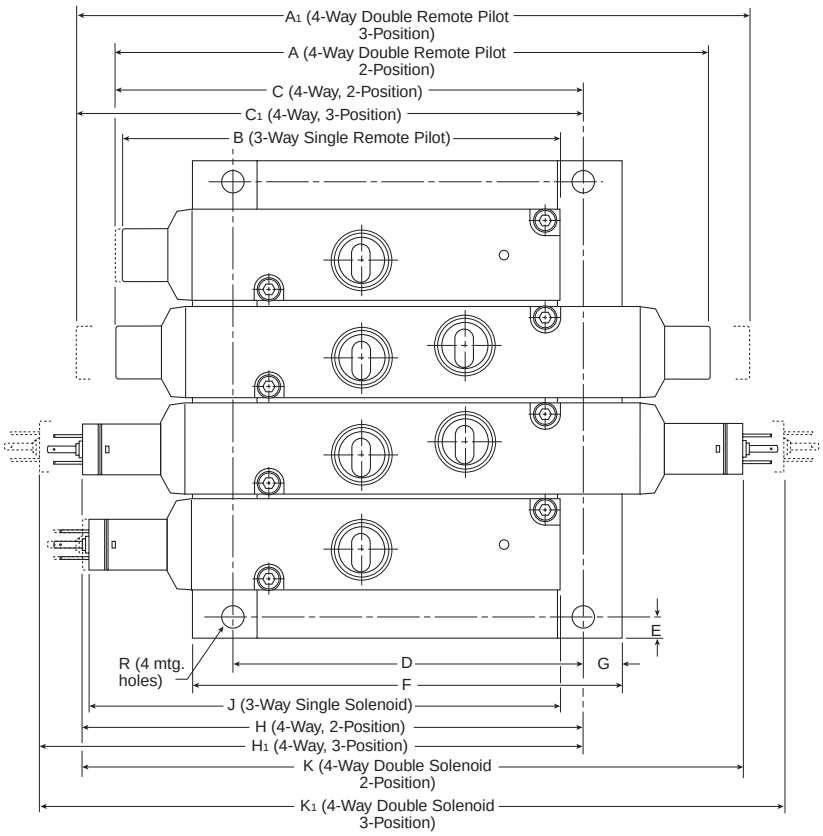

EZ3 Manifold

A 6.70 (170.3)	**A1** 7.64 (194.1)	**B** 5.01 (127.3)	**C** 5.33 (135.5)
C1 5.72 (145.4)	**D** 3.94 (100)	**E** .24 (6)	**F** 4.84 (123)
G .45 (11.5)	**H** 5.67 (143.9)	**H1** 6.13 (155.8)	**J** 5.42 (137.7)
K 7.52 (191.1)	**K1** 8.46 (214.9)	**L** 3.43 (87)	**M** 1.54 (39)
N 1.08 (27.5)	**P** 1.64 (41.6)	**Q** 2.11 (53.6)	**R** .26 (6.5)

Inches (mm)

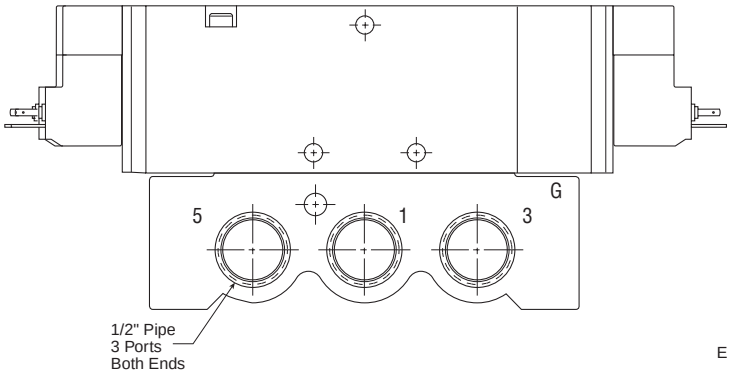

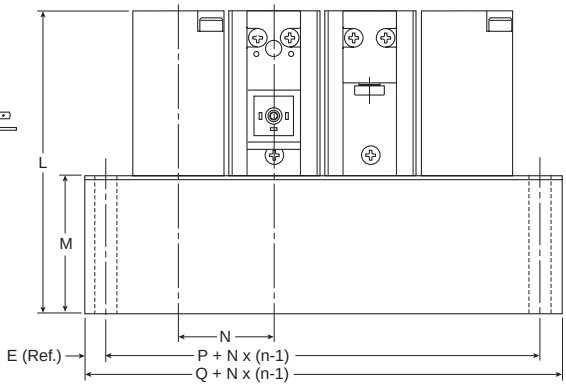

n = Number of Stations

Parker Hannifin Corporation
Pneumatic Division
Richland. Michigan
www.parker.com/pneumatics

Notes

Parker Hannifin Corporation
Pneumatic Division
Richland. Michigan
www.parker.com/pneumatics

www.comoso.com