aerospace
climate control
electromechanical
filtration
fluid & gas handling
hydraulics
pneumatics
process control
sealing & shielding

Pneumatic Cylinders

Series P1P Compact - Ø20 to Ø100 mm
According to ISO 21287

Catalogue PDE2660TCUK September 2014

Parker

ENGINEERING YOUR SUCCESS.

www.comoso.com

Features ..... 3 - 4
Technical Information
General technical data 5
Operating and environmental data 5
Material specification 5
Cylinder forces 6
Application Guide 7
Order code key 8
Standard stroke length 8
Order Codes
Double acting with female piston rod thread 9
Double acting with guided piston rod 10
Single acting with female piston rod thread 11
Double acting through piston rod with female piston rod thread 12
Double acting low temperature with female piston rod thread 13
Double acting high temperature with female piston rod thread 14
Dimensions
Double acting with female piston rod thread - Bore 20 - 63 mm 15
Double acting with guided piston rod - Bore 20 - 63 mm 15
Double acting with male piston rod thread - Bore 20 - 63 mm 15
Double acting with female piston rod thread - Bore 80 - 100 mm 16
Double acting with guided piston rod - Bore 80 - 100 mm 16
Double acting with male piston rod thread - Bore 80 - 100 mm 16
Mountings
Flange 17
Foot bracket 17
Pivot bracket with rigid bearing 18
Clevis bracket MP2 18
Clevis bracket MP4 19
Clevis bracket GA 19
Pivot bracket with swivel bearing 20
Swivel eye bracket 20
Mounting kit 21
Swivel rod eye 22
Clevis 22
Flexo coupling 23
Nut 23
Accessories
Sensors ..... 25 - 27
Repair Kits 28
Air Quality 29

⚠ WARNING

FAILURE OR IMPROPER SELECTION OR IMPROPER USE OF THE PRODUCTS AND/OR SYSTEMS DESCRIBED HEREIN OR RELATED ITEMS CAN CAUSE DEATH, PERSONAL INJURY AND PROPERTY DAMAGE.

This document and other information from Parker Hannifin Corporation, its subsidiaries and authorized distributors provide product and/or system options for further investigation by users having technical expertise. It is important that you analyze all aspects of your application including consequences of any failure, and review the information concerning the product or system in the current product catalog. Due to the variety of operating conditions and applications for these products or systems, the user, through its own analysis and testing, is solely responsible for making the final selection of the products and systems and assuring that all performance, safety and warning requirements of the application are met.

The products described herein, including without limitation, product features, specifications, designs, availability and pricing, are subject to change by Parker Hannifin Corporation and its subsidiaries at any time without notice.

Offer of Sale

The items described in this document are hereby offered for sale by Parker Hannifin Corporation, its subsidiaries or its authorized distributors. This offer and its acceptance are governed by the provisions stated on the separate page of this document entitled "Offer of Sale".

© Copyright 2014 Parker Hannifin Corporation. All Rights Reserved

www.comoso.com

P1P Compact Cylinder according to ISO 21287

The P1P Series is a complete range of ISO 21287 compact cylinders developed to meet the highest requirements for quality and performance. The careful design in every detail provides first class function and service life properties.

Features

- ISO 21287 conformity and global availability throughout the worldwide Parker Hannifin organization.
- Bore sizes 20, 25, 32, 40, 50, 63, 80 and 100mm.
- One of the widest ranges of sizes and versions for a broad range of applications.
- Corrosion resistant design with end covers and barrel in anodised aluminium and stainless steel piston rod.
- Long service life thanks to proven high quality materials, surfaces and seal technology.
- Compact design and many installation alternatives for flexible use in narrow spaces.
- Efficient elastic cushioning absorbing residual energy facilitates high speeds and short cycle times.
- Smooth, low noise operation thanks to elastic material in end faces of the piston.
- Flush, drop in global P8S-G sensors on all side faces for flexible and compact assembly and mechanical protection of the sensors.
- P1P is suitable for processing, packaging and handling applications within the food industry thanks to the food approved grease used for the initial greasing.

High quality

Reliability and long service life are key qualities of any pneumatic cylinder. Therefore we have given P1P highest possible quality in every detail based on our 40 years of experience and extensive testing. The design is based on the following important principles.

- Proven seal design and materials throughout the cylinder. The expertise for seal technology within Parker Hannifin is the basis for leading and proven tribology solutions for all our pneumatic actuators.
- Body extrusion in anodised aluminium with extra fine and hard internal surface for optimum operational conditions.
- End covers and body extrusion with external anodisation for excellent corrosion resistance.
- Stainless steel piston rod for versatile use in corrosive environment.

Compact dimensions for versatile use

The very compact axial dimensions makes it possible to use the P1P cylinders in a broad range of applications. Note that the P1P cylinders are up to 50% shorter than ISO 15552 cylinders for the same stroke length. This is highly valuable in narrow spaces in machines or production lines. The P1P range is a truly versatile cylinder family.

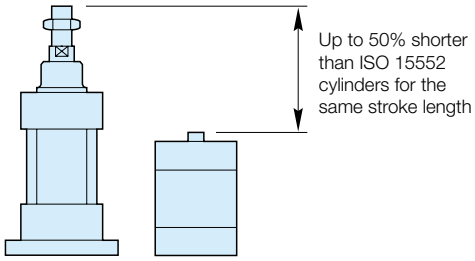

www.comoso.com

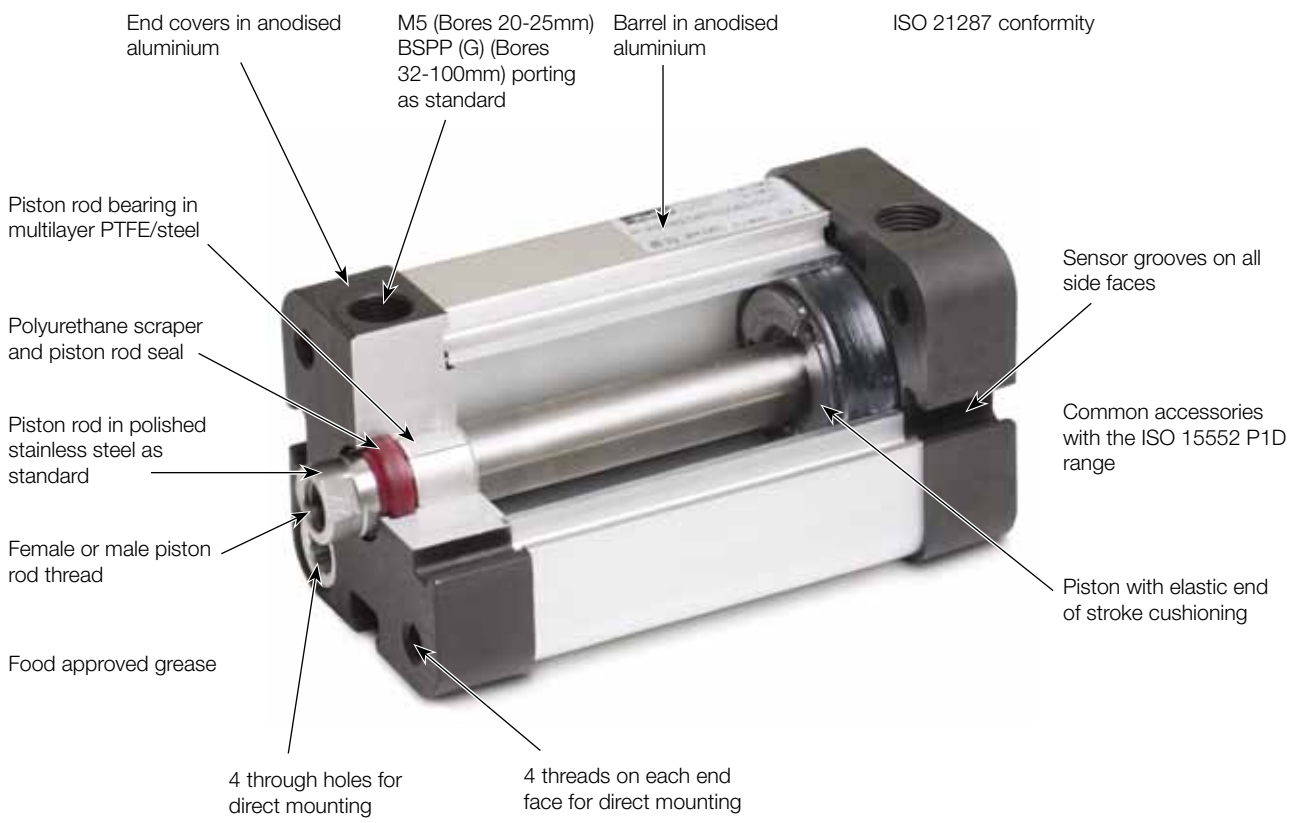

Flexible installation

The new P1P compact cylinder range offers many opportunities for mechanical installation.

- There are holes through the cylinder body. Use these to fix the cylinder with through bolts into threads in the surface behind the cylinder.
- In each end of the same through holes there are female threads. These can be used for flange mounting of the actuator from the rear or front face.
- The wide range of ISO 15552 cylinder mountings are available for use with P1P cylinders bore 20-100 mm. Examples are the foot and flange mountings, as well as MP2 and MP4 mountings for articulated applications.

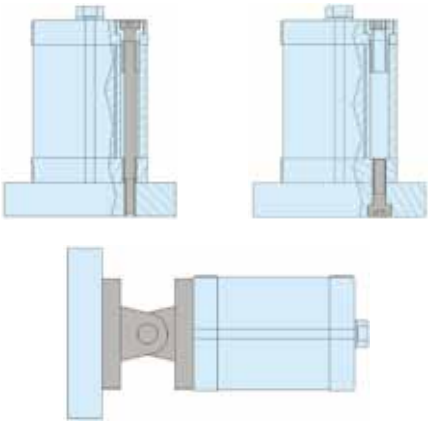

Global drop-in P8S-G sensor range

The global sensor range P8S-G fits P1P as well as most of our pneumatic cylinder families. This simplifies your ordering, stock and overall service of sensors.

The P8S-G sensors has a drop-in mounting into the sensor grooves facilitating the assembly and commissioning work. There are sensor grooves on all four side faces for maximum flexibility and adaptation to each application.

The wide range of P8S-G sensors includes both reed and solid state sensors, flying lead versions with 3 and 10 meter cable and pig tail versions with M8 and M12 connector.

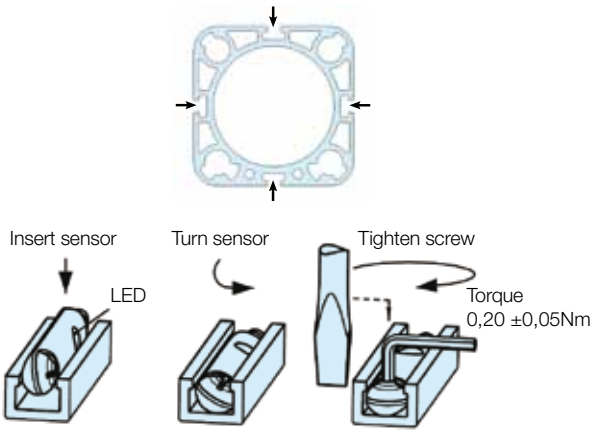

www.comoso.com

General technical data

Product type		Compact cylinder according to ISO 21287
Bore size		20 - 100 mm
Stroke length		1 - 500 mm
Versions	P1PS...DS	Double acting
	P1PG...DS	Double acting with non rotating piston rod
	P1PS...SS	Single acting: Spring return (Bores 20 - 63mm)
	P1PS...TS	Single acting: Spring extended (Bores 20 - 63mm)
	P1PS...KS	Through piston rod
	P1PS...DF	High temperature
	P1PS...DL	Low temperature
Cushioning		Elastic cushioning
Position sensing		Proximity sensor
Installation	Direct	Through holes Female thread on front and rear end face
	Accessories	Cylinder and piston rod mountings
Mounting position		Any

Operating and environmental data

Operating medium	For best possible service life and trouble-free operation it is recommended to use dry, filtered compressed air to ISO 8573-1:2010 quality class 3.4.3. This specifies a dew point of +3°C for indoor operation (a lower dew point should be selected for minus temperature operation and we recommend the use of an inline dryer) and is in line with the air quality from most standard compressors with a standard filter.	
Operating pressure	0.5 bar to 10 bar	
Ambient temperature	Standard version	-20°C to +80°C
	High temperature	-10°C to +120°C
	Low temperature	-40°C to +80°C
Pre-lubricated	Further lubrication is normally not necessary. If additional lubrication is introduced it must be continued.	
Corrosion resistance	High resistance to corrosion and chemicals. Materials and surface treatment have been selected for industrial applications where solvents and detergents are frequently used.	

Material specification

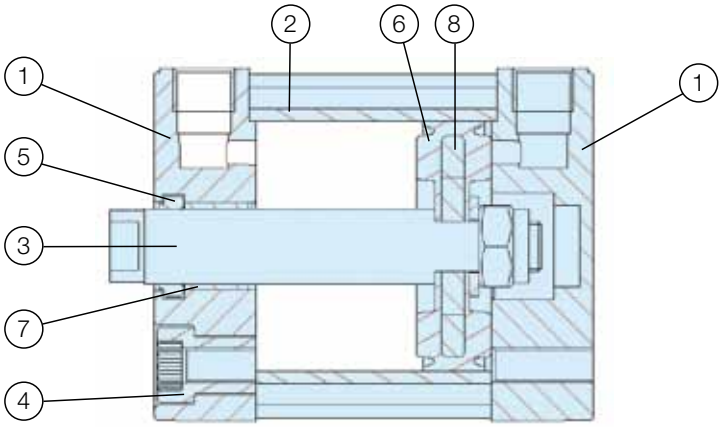

Pos	Part		Specification
1	End covers		Anodised aluminium
2	Cylinder barrel		Anodised aluminium
3	Piston rod		Stainless steel, DIN X 10 CrNiS 18 9
4	End cover screws		Zinc plated steel
5	Piston rod seal	Standard	Polyurethane (PUR)
		High temperature	Flurocarbon rubber (FPM)
		Low temperature	Polyurethane (PUR)
6	Piston / piston seal	Standard	Aluminium / Nitrile rubber (NBR)
		High temperature	Aluminium / Hydrogenated nitrile rubber (HNBR)
		Low temperature	Aluminium / Nitrile rubber (NBR)
7	Piston rod bearing		Multilayer PTFE/steel
8	Magnet		Plastic coated magnetic material
	Note on materials		RoHS compliant

www.comoso.com

Cylinder forces, double acting variants

Cylinder bore mm		Stroke	Bore mm	Piston rod mm	Area cm2	Max theoretical force in N (bar) 1.0 bar	2.0 bar	3.0 bar	4.0 bar	5.0 bar	6.0 bar	7.0 bar	8.0 bar	9.0 bar	10.0 bar
20	Double acting	+	20	10	3,1	31	63	94	126	157	188	220	251	283	314
		-	20	10	2,3	23	46	69	92	115	138	161	184	207	231
25	Double acting	+	25	10	4,9	49	98	147	196	245	295	344	393	442	491
		-	25	10	4,1	41	82	124	165	206	247	289	330	371	412
32	Double acting	+	32	12	8.0	80	161	241	322	402	483	563	643	724	804
		-	32	12	6.9	69	138	207	276	346	415	484	553	622	691
40	Double acting	+	40	12	12.6	126	251	377	503	628	754	880	1005	1131	1257
		-	40	12	11.4	114	229	343	457	572	686	800	915	1029	1144
50	Double acting	+	50	16	19.6	196	393	589	785	982	1178	1374	1571	1767	1963
		-	50	16	17.6	176	352	529	705	881	1057	1234	1410	1586	1762
63	Double acting	+	63	16	31.2	312	623	935	1247	1559	1870	2182	2494	2805	3117
		-	63	16	29.2	292	583	875	1166	1458	1750	2041	2333	2624	2916
80	Double acting	+	80	20	50.3	503	1005	1508	2011	2513	3016	3518	4021	4524	5026
		-	80	20	47.1	471	942	1414	1885	2356	2827	3299	3770	4241	4712
100	Double acting	+	100	25	78,5	785	1571	2356	3142	3927	4712	5498	6283	7069	7854
		-	100	25	73,6	736	1473	2209	2945	3682	4418	5154	5890	6627	7363

+ = Outward stroke
- = Return stroke

Note: Select a theoretical force 50-100% larger than the force required.

Technical data

Cylinder designation	Cylinder bore area mm	cm²	Piston rod area mm	cm²	Piston rod thread	Total mass at 0 mm stroke kg	addition per 10 mm stroke kg	Air consumption litres [1]	Port size
P1PS...DS7G	**Double acting with female piston rod thread**								
P1PS020	20	3.1	10	0.78	M6 x 1.0	0.140	0.018	0.0405	M5
P1PS025	25	4.9	10	0.78	M6 x 1.0	0.170	0.022	0.0633	M5
P1PS032	32	8.0	12	1.1	M8 x 1.25	0.291	0.030	0.105	G1/8
P1PS040	40	12.6	12	1.1	M8 x 1.25	0.375	0.036	0.162	G1/8
P1PS050	50	19.6	16	2.0	M10 x 1.5	0.519	0.050	0.253	G1/8
P1PS063	63	31.2	16	2.0	M10 x 1.5	0.743	0.059	0.414	G1/8
P1PS080	80	50.3	20	3.1	M12 x 1.25	1.263	0.081	0.669	G1/8
P1PS100	100	78.5	25	4.9	M12 x 1.25	2.206	0.111	1.043	G1/8
P1PS...DS8G	**Double acting with male piston rod thread**								
P1PS020	20	3.1	10	0.78	M8 x 1.25	0.145	0.018	0.0405	M5
P1PS025	25	4.9	10	0.78	M8 x 1.25	0.179	0.022	0.0633	M5
P1PS032	32	8.0	12	1.1	M10 x 1.25	0.308	0.030	0.105	G1/8
P1PS040	40	12.6	12	1.1	M10 x 1.25	0.392	0.036	0.162	G1/8
P1PS050	50	19.6	16	2.0	M12 x 1.25	0.548	0.050	0.253	G1/8
P1PS063	63	31.2	16	2.0	M12 x 1.25	0.772	0.059	0.414	G1/8
P1PS080	80	50.3	20	3.1	M16 x 1.5	1.322	0.081	0.669	G1/8
P1PS100	100	50.3	25	4.9	M16 x 1.5	1.267	0.111	1.043	G1/8
P1PG...DS7G	**Double acting with guided piston rod**								
P1PG020	20	3.1	10	0.78	-	0.185	0.022	0.0405	M5
P1PG025	25	4.9	10	0.78	-	0.217	0.027	0.0633	M5
P1PG032	32	8.0	12	1.1	-	0.358	0.033	0.105	G1/8
P1PG040	40	12.6	12	1.1	-	0.455	0.039	0.162	G1/8
P1PG050	50	19.6	16	2.0	-	0.664	0.057	0.253	G1/8
P1PG063	63	31.2	16	2.0	-	0.930	0.067	0.414	G1/8
P1PG080	80	50.3	20	3.1	-	1.597	0.093	0.669	G1/8
P1PG100	100	50.3	25	4.9	-	1.679	0.123	1.043	G1/8

[1] Free air consumption per 10 mm stroke length for a double stroke at 6 bar

www.comoso.com

Selecting Pneumatic System Components

Cylinder to Valve: The below chart contains recommendations for selecting air valve products based on 5.5 bar with a 0.35 bar pressure drop. The values within the chart show the corresponding Cv values.

Moduflex Valve System

- Stand-alone valves, short-build valve manifold, or large valve manifold configurations available
- Cv range from 0.18 – 0.80
- Peripheral modules available— flow control, pressure regulation, P.O. check valves and vacuum generatorsIsys

Cylinder speed (mm/s)	20	25	32	40	50	63	80	100
50	0.01	0.02	0.03	0.04	0.06	0.10	0.16	0.26
100	0.02	0.03	0.05	0.08	0.13	0.20	0.33	0.51
150	0.03	0.05	0.08	0.12	0.19	0.30	0.49	0.77
200	0.04	0.06	0.10	0.16	0.26	0.41	0.65	1.02
250	0.05	0.08	0.13	0.20	0.32	0.51	0.82	1.28
300	0.06	0.10	0.16	0.25	0.38	0.61	0.98	1.53
350	0.07	0.11	0.18	0.29	0.45	0.71	1.15	1.79
400	0.08	0.13	0.21	0.33	0.51	0.81	1.31	2.04
450	0.09	0.14	0.24	0.37	0.58	0.91	1.47	2.30
500	0.10	0.16	0.26	0.41	0.64	1.01	1.64	2.56
	Size 1			Size 2		See Larger valve system		

Micro / ISO Valve System

- Isys Micro Cv range 0.30 – 0.35
- IsysNet system fieldbus, Turck system fieldbus, 25 pin D-sub, or low cost Moduflex fieldbus options available
- Isys ISO offers 5 sizes with Cv range 0.55 – 6.0

Cylinder speed (mm/s)	20	25	32	40	50	63	80	100	Valve range
50	0.01	0.02	0.03	0.04	0.06	0.10	0.16	0.26	Isys Micro
100	0.02	0.03	0.05	0.08	0.13	0.20	0.33	0.51	HB
150	0.03	0.05	0.08	0.12	0.19	0.30	0.49	0.77	HA
200	0.04	0.06	0.10	0.16	0.26	0.41	0.65	1.02	
250	0.05	0.08	0.13	0.20	0.32	0.51	0.82	1.28	H1
300	0.06	0.10	0.16	0.25	0.38	0.61	0.98	1.53	H2
350	0.07	0.11	0.18	0.29	0.45	0.71	1.15	1.79	
400	0.08	0.13	0.21	0.33	0.51	0.81	1.31	2.04	
450	0.09	0.14	0.24	0.37	0.58	0.91	1.47	2.30	
500	0.10	0.16	0.26	0.41	0.64	1.01	1.64	2.56	

www.comoso.com

Order Code Key

P	1	P	S	0	3	2	D	S	7	G	0	0	2	5

Cylinder version

S	Standard
G	Guided

Cylinder bore mm

020
025
032
040
050
063
080
100

Stroke length

See below table for standard stroke lengths in mm.

Cylinder ports & magnetic function

Magnet	
G	20 - 25mm : M5 threads 32 - 100mm : BSP threads

Rod extension only digits 5-6-7

Cylinder bore mm

H	20
J	25
K	32
L	40
M	50
N	63
P	80
Q	100

Piston rod extension

E.g. KR5 = Cylinder bore 32 mm with piston rod extension = 255 mm

01-99	1-99	**N0-N9**	220-229
A0-A9	100-109	**P0-P9**	230-239
B0-B9	110-119	**Q0-Q9**	240-249
C0-C9	120-129	**R0-R9**	250-259
D0-D9	130-139	**S0-S9**	260-269
E0-E9	140-149	**T0-T9**	270-279
F0-F9	150-159	**U0-U9**	280-289
G0-G9	160-169	**V0-V9**	290-299
H0-H9	170-179	**W0-W9**	300-309
J0-J9	180-189	**X0-X9**	310-319
K0-K9	190-199	**Y0-Y9**	320-329
L0-L9	200-209	**Z0-Z9**	330-339
M0-M9	210-219	Longer on request	

Piston rod thread

7	Female
8	Male (not for guided version)

Function

D	Double acting
S	Single acting: Spring return (Bore 20 - 63mm)
T	Single acting: Spring extended (Bore 20 - 63mm)
K	Through Piston rod

Note: single acting only stroke of 25 mm

Piston rod material	Seals
Stainless steel	
S	Standard -20°C to +80°C
F	High temperature version -10°C to +120°C Non magnetic function
L	Low temperature version -40°C to +80°C

Standard stroke length

● Standard stroke length in mm ▭ Non standard stroke length **

Cylinder designation	Cylinder bore	5	10	15	20	25*	30	40	50*	60	80*	100*
Double acting												
P1PS020	20	●	●	●	●	●	●	●	●	●		
P1PS025	25	●	●	●	●	●	●	●	●	●		
P1PS032	32	●	●	●	●	●	●	●	●	●	●	
P1PS040	40	●	●	●	●	●	●	●	●	●	●	
P1PS050	50	●	●	●	●	●	●	●	●	●	●	
P1PS063	63	●	●	●	●	●	●	●	●	●	●	
P1PS080	80	●	●	●	●	●	●	●	●	●	●	●
P1PS100	100		●	●	●	●	●	●	●	●	●	●
Double acting with guided piston rod												
P1PG020	20	●	●	●	●	●	●	●	●	●		
P1PG025	25	●	●	●	●	●	●	●	●	●		
P1PG032	32	●	●	●	●	●	●	●	●	●	●	
P1PG040	40	●	●	●	●	●	●	●	●	●	●	
P1PG050	50	●	●	●	●	●	●	●	●	●	●	
P1PG063	63	●	●	●	●	●	●	●	●	●	●	
P1PG080	80	●	●	●	●	●	●	●	●	●	●	●
P1PG100	100		●	●	●	●	●	●	●	●	●	●

* Standard stroke lengths in mm according to ISO 4393
** Max stroke 500 mm

www.comoso.com

Double acting

The versatile high quality ISO compact cylinder range, P1P cylinders are up to 50% shorter than ISO15552 cylinders for the same stroke. Suitable for a wide range of applications.

- Bore 20 - 100 mm
- ISO 21287 conformity
- Corrosion resistant design and low weight construction
- Magnetic piston as standard
- Elastic cushioning
- Flexible direct mounting
- ISO 15552 mountings and global sensor range common with P1D

Double acting - Female threaded piston rod

Ø20mm - (M5)

Stroke mm	Order code
5	**P1PS020DS7G0005**
10	**P1PS020DS7G0010**
15	**P1PS020DS7G0015**
20	**P1PS020DS7G0020**
25	**P1PS020DS7G0025**
30	**P1PS020DS7G0030**
40	**P1PS020DS7G0040**
50	**P1PS020DS7G0050**
60	**P1PS020DS7G0060**

Ø25mm - (M5)

Stroke mm	Order code
5	**P1PS025DS7G0005**
10	**P1PS025DS7G0010**
15	**P1PS025DS7G0015**
20	**P1PS025DS7G0020**
25	**P1PS025DS7G0025**
30	**P1PS025DS7G0030**
40	**P1PS025DS7G0040**
50	**P1PS025DS7G0050**
60	**P1PS025DS7G0060**

Ø32mm - (G1/8)

Stroke mm	Order code
5	**P1PS032DS7G0005**
10	**P1PS032DS7G0010**
15	**P1PS032DS7G0015**
20	**P1PS032DS7G0020**
25	**P1PS032DS7G0025**
30	**P1PS032DS7G0030**
40	**P1PS032DS7G0040**
50	**P1PS032DS7G0050**
60	**P1PS032DS7G0060**
80	**P1PS032DS7G0080**

Ø40mm - (G1/8)

Stroke mm	Order code
5	**P1PS040DS7G0005**
10	**P1PS040DS7G0010**
15	**P1PS040DS7G0015**
20	**P1PS040DS7G0020**
25	**P1PS040DS7G0025**
30	**P1PS040DS7G0030**
40	**P1PS040DS7G0040**
50	**P1PS040DS7G0050**
60	**P1PS040DS7G0060**
80	**P1PS040DS7G0080**

Ø50mm - (G1/8)

Stroke mm	Order code
5	**P1PS050DS7G0005**
10	**P1PS050DS7G0010**
15	**P1PS050DS7G0015**
20	**P1PS050DS7G0020**
25	**P1PS050DS7G0025**
30	**P1PS050DS7G0030**
40	**P1PS050DS7G0040**
50	**P1PS050DS7G0050**
60	**P1PS050DS7G0060**
80	**P1PS050DS7G0080**

Ø63mm - (G1/8)

Stroke mm	Order code
5	**P1PS063DS7G0005**
10	**P1PS063DS7G0010**
15	**P1PS063DS7G0015**
20	**P1PS063DS7G0020**
25	**P1PS063DS7G0025**
30	**P1PS063DS7G0030**
40	**P1PS063DS7G0040**
50	**P1PS063DS7G0050**
60	**P1PS063DS7G0060**
80	**P1PS063DS7G0080**

Ø80mm - (G1/8)

Stroke mm	Order code
5	**P1PS080DS7G0005**
10	**P1PS080DS7G0010**
15	**P1PS080DS7G0015**
20	**P1PS080DS7G0020**
25	**P1PS080DS7G0025**
30	**P1PS080DS7G0030**
40	**P1PS080DS7G0040**
50	**P1PS080DS7G0050**
60	**P1PS080DS7G0060**
80	**P1PS080DS7G0080**
100	**P1PS080DS7G0100**

Ø100mm - (G1/8)

Stroke mm	Order code
10	**P1PS100DS7G0010**
15	**P1PS100DS7G0015**
20	**P1PS100DS7G0020**
25	**P1PS100DS7G0025**
30	**P1PS100DS7G0030**
40	**P1PS100DS7G0040**
50	**P1PS100DS7G0050**
60	**P1PS100DS7G0060**
80	**P1PS100DS7G0080**
100	**P1PS100DS7G0100**

Sensors

For sensors see page 25.

www.comoso.com

Double acting - Guided

This cylinder version feature twin guide rods connected to the piston rod by a large flange plate. These cylinders are ideal for clamping an moving applications where turning of the piston rod must be avoided.

Double acting - Guided

Ø20mm - (M5)

Stroke mm	Order code
5	**P1PG020DS7G0005**
10	**P1PG020DS7G0010**
15	**P1PG020DS7G0015**
20	**P1PG020DS7G0020**
25	**P1PG020DS7G0025**
30	**P1PG020DS7G0030**
40	**P1PG020DS7G0040**
50	**P1PG020DS7G0050**
60	**P1PG020DS7G0060**

Ø25mm - (M5)

Stroke mm	Order code
5	**P1PG025DS7G0005**
10	**P1PG025DS7G0010**
15	**P1PG025DS7G0015**
20	**P1PG025DS7G0020**
25	**P1PG025DS7G0025**
30	**P1PG025DS7G0030**
40	**P1PG025DS7G0040**
50	**P1PG025DS7G0050**
60	**P1PG025DS7G0060**

Ø32mm - (G1/8)

Stroke mm	Order code
5	**P1PG032DS7G0005**
10	**P1PG032DS7G0010**
15	**P1PG032DS7G0015**
20	**P1PG032DS7G0020**
25	**P1PG032DS7G0025**
30	**P1PG032DS7G0030**
40	**P1PG032DS7G0040**
50	**P1PG032DS7G0050**
60	**P1PG032DS7G0060**
80	**P1PG032DS7G0080**

Ø40mm - (G1/8)

Stroke mm	Order code
5	**P1PG040DS7G0005**
10	**P1PG040DS7G0010**
15	**P1PG040DS7G0015**
20	**P1PG040DS7G0020**
25	**P1PG040DS7G0025**
30	**P1PG040DS7G0030**
40	**P1PG040DS7G0040**
50	**P1PG040DS7G0050**
60	**P1PG040DS7G0060**
80	**P1PG040DS7G0080**

Ø50mm - (G1/8)

Stroke mm	Order code
5	**P1PG050DS7G0005**
10	**P1PG050DS7G0010**
15	**P1PG050DS7G0015**
20	**P1PG050DS7G0020**
25	**P1PG050DS7G0025**
30	**P1PG050DS7G0030**
40	**P1PG050DS7G0040**
50	**P1PG050DS7G0050**
60	**P1PG050DS7G0060**
80	**P1PG050DS7G0080**

Ø63mm - (G1/8)

Stroke mm	Order code
5	**P1PG063DS7G0005**
10	**P1PG063DS7G0010**
15	**P1PG063DS7G0015**
20	**P1PG063DS7G0020**
25	**P1PG063DS7G0025**
30	**P1PG063DS7G0030**
40	**P1PG063DS7G0040**
50	**P1PG063DS7G0050**
60	**P1PG063DS7G0060**
80	**P1PG063DS7G0080**

Ø80mm - (G1/8)

Stroke mm	Order code
5	**P1PG080DS7G0005**
10	**P1PG080DS7G0010**
15	**P1PG080DS7G0015**
20	**P1PS080DS7G0020**
25	**P1PG080DS7G0025**
30	**P1PG080DS7G0030**
40	**P1PG080DS7G0040**
50	**P1PG080DS7G0050**
60	**P1PG080DS7G0060**
80	**P1PG080DS7G0080**
100	**P1PG080DS7G0100**

Ø100mm - (G1/8)

Stroke mm	Order code
10	**P1PG100DS7G0010**
15	**P1PG100DS7G0015**
20	**P1PG100DS7G0020**
25	**P1PG100DS7G0025**
30	**P1PG100DS7G0030**
40	**P1PG100DS7G0040**
50	**P1PG100DS7G0050**
60	**P1PG100DS7G0060**
80	**P1PG100DS7G0080**
100	**P1PG100DS7G0100**

Sensors

For sensors see page 25.

www.comoso.com

Single acting

Single acting P1P cylinders are available in bore sizes 20 - 63 mm and in two versions to suit a wide range of applications. Choose between the spring return (SS) and the spring extended (TS) versions.

Single acting - Spring return - Female threaded piston rod

Ø20mm - (M5)

Stroke mm	Order code
25	**P1PS020SS7G0025**

Ø25mm - (M5)

Stroke mm	Order code
25	**P1PS025SS7G0025**

Ø32mm - (G1/8)

Stroke mm	Order code
25	**P1PS032SS7G0025**

Ø40mm - (G1/8)

Stroke mm	Order code
25	**P1PS040SS7G0025**

Ø50mm - (G1/8)

Stroke mm	Order code
25	**P1PS050SS7G0025**

Ø63mm - (G1/8)

Stroke mm	Order code
25	**P1PS063SS7G0025**

Single acting - Spring extended - Female threaded piston rod

Ø20mm - (M5)

Stroke mm	Order code
25	**P1PS020TS7G0025**

Ø25mm - (M5)

Stroke mm	Order code
25	**P1PS025TS7G0025**

Ø32mm - (G1/8)

Stroke mm	Order code
25	**P1PS032TS7G0025**

Ø40mm - (G1/8)

Stroke mm	Order code
25	**P1PS040TS7G0025**

Ø50mm - (G1/8)

Stroke mm	Order code
25	**P1PS050TS7G0025**

Ø63mm - (G1/8)

Stroke mm	Order code
25	**P1PS063TS7G0025**

Note: Within limits other stroke lengths close to above standard stroke can be realised with corrosponding change of the spring force.

Sensors

For sensors see page 25.

www.comoso.com

Compact ISO Cylinders - P1P Series

Double acting - Through piston rod

The P1P through rod cylinder version is available in bore sizes 20 - 100 mm. This cylinder type is used in many ways e.g. in applications with higher lateral forces or when performing a movement on both sides of the cylinder.

Double acting - Through piston rod - Female threaded piston rod

Ø20mm - (M5)

Stroke mm	Order code
5	**P1PS020KS7G0005**
10	**P1PS020KS7G0010**
15	**P1PS020KS7G0015**
20	**P1PS020KS7G0020**
25	**P1PS020KS7G0025**
30	**P1PS020KS7G0030**
40	**P1PS020KS7G0040**
50	**P1PS020KS7G0050**
60	**P1PS020KS7G0060**

Ø25mm - (M5)

Stroke mm	Order code
5	**P1PS025KS7G0005**
10	**P1PS025KS7G0010**
15	**P1PS025KS7G0015**
20	**P1PS025KS7G0020**
25	**P1PS025KS7G0025**
30	**P1PS025KS7G0030**
40	**P1PS025KS7G0040**
50	**P1PS025KS7G0050**
60	**P1PS025KS7G0060**

Ø32mm - (G1/8)

Stroke mm	Order code
5	**P1PS032KS7G0005**
10	**P1PS032KS7G0010**
15	**P1PS032KS7G0015**
20	**P1PS032KS7G0020**
25	**P1PS032KS7G0025**
30	**P1PS032KS7G0030**
40	**P1PS032KS7G0040**
50	**P1PS032KS7G0050**
60	**P1PS032KS7G0060**
80	**P1PS032KS7G0080**

Ø40mm - (G1/8)

Stroke mm	Order code
5	**P1PS040KS7G0005**
10	**P1PS040KS7G0010**
15	**P1PS040KS7G0015**
20	**P1PS040KS7G0020**
25	**P1PS040KS7G0025**
30	**P1PS040KS7G0030**
40	**P1PS040KS7G0040**
50	**P1PS040KS7G0050**
60	**P1PS040KS7G0060**
80	**P1PS040KS7G0080**

Ø50mm - (G1/8)

Stroke mm	Order code
5	**P1PS050KS7G0005**
10	**P1PS050KS7G0010**
15	**P1PS050KS7G0015**
20	**P1PS050KS7G0020**
25	**P1PS050KS7G0025**
30	**P1PS050KS7G0030**
40	**P1PS050KS7G0040**
50	**P1PS050KS7G0050**
60	**P1PS050KS7G0060**
80	**P1PS050KS7G0080**

Ø63mm - (G1/8)

Stroke mm	Order code
5	**P1PS063KS7G0005**
10	**P1PS063KS7G0010**
15	**P1PS063KS7G0015**
20	**P1PS063KS7G0020**
25	**P1PS063KS7G0025**
30	**P1PS063KS7G0030**
40	**P1PS063KS7G0040**
50	**P1PS063KS7G0050**
60	**P1PS063KS7G0060**
80	**P1PS063KS7G0080**

Ø80mm - (G1/8)

Stroke mm	Order code
5	**P1PS080KS7G0005**
10	**P1PS080KS7G0010**
15	**P1PS080KS7G0015**
20	**P1PS080KS7G0020**
25	**P1PS080KS7G0025**
30	**P1PS080KS7G0030**
40	**P1PS080KS7G0040**
50	**P1PS080KS7G0050**
60	**P1PS080KS7G0060**
80	**P1PS080KS7G0080**
100	**P1PS080KS7G0100**

Ø100mm - (G1/8)

Stroke mm	Order code
10	**P1PS100KS7G0010**
15	**P1PS100KS7G0015**
20	**P1PS100KS7G0020**
25	**P1PS100KS7G0025**
30	**P1PS100KS7G0030**
40	**P1PS100KS7G0040**
50	**P1PS100KS7G0050**
60	**P1PS100KS7G0060**
80	**P1PS100KS7G0080**
100	**P1PS100KS7G0100**

Sensors

For sensors see page 25.

www.comoso.com

Double acting - High temperature

Use this P1P cylinder version, available in bore sizes 20 - 100 mm, for high temperature applications with temperatures up to +120°C. The chemical resistance thanks to the design in anodised aluminium is an advantage in many high temperature applications. High temperature cylinders cannot be fitted with sensors (the magnetic field strength in high temperatures is too low to ensure correct reliable sensor function).

Double acting - High temperature - Female threaded piston rod

Ø20mm - (M5)

Stroke mm	Order code
5	**P1PS020DF7G0005**
10	**P1PS020DF7G0010**
15	**P1PS020DF7G0015**
20	**P1PS020DF7G0020**
25	**P1PS020DF7G0025**
30	**P1PS020DF7G0030**
40	**P1PS020DF7G0040**
50	**P1PS020DF7G0050**
60	**P1PS020DF7G0060**

Ø25mm - (M5)

Stroke mm	Order code
5	**P1PS025DF7G0005**
10	**P1PS025DF7G0010**
15	**P1PS025DF7G0015**
20	**P1PS025DF7G0020**
25	**P1PS025DF7G0025**
30	**P1PS025DF7G0030**
40	**P1PS025DF7G0040**
50	**P1PS025DF7G0050**
60	**P1PS025DF7G0060**

Ø32mm - (G1/8)

Stroke mm	Order code
5	**P1PS032DF7G0005**
10	**P1PS032DF7G0010**
15	**P1PS032DF7G0015**
20	**P1PS032DF7G0020**
25	**P1PS032DF7G0025**
30	**P1PS032DF7G0030**
40	**P1PS032DF7G0040**
50	**P1PS032DF7G0050**
60	**P1PS032DF7G0060**
80	**P1PS032DF7G0080**

Ø40mm - (G1/8)

Stroke mm	Order code
5	**P1PS040DF7G0005**
10	**P1PS040DF7G0010**
15	**P1PS040DF7G0015**
20	**P1PS040DF7G0020**
25	**P1PS040DF7G0025**
30	**P1PS040DF7G0030**
40	**P1PS040DF7G0040**
50	**P1PS040DF7G0050**
60	**P1PS040DF7G0040**
80	**P1PS040DF7G0050**

Ø50mm - (G1/8)

Stroke mm	Order code
5	**P1PS050DF7G0005**
10	**P1PS050DF7G0010**
15	**P1PS050DF7G0015**
20	**P1PS050DF7G0020**
25	**P1PS050DF7G0025**
30	**P1PS050DF7G0030**
40	**P1PS050DF7G0040**
50	**P1PS050DF7G0050**
60	**P1PS050DF7G0060**
80	**P1PS050DF7G0080**

Ø63mm - (G1/8)

Stroke mm	Order code
5	**P1PS063DF7G0005**
10	**P1PS063DF7G0010**
15	**P1PS063DF7G0015**
20	**P1PS063DF7G0020**
25	**P1PS063DF7G0025**
30	**P1PS063DF7G0030**
40	**P1PS063DF7G0040**
50	**P1PS063DF7G0050**
60	**P1PS063DF7G0060**
80	**P1PS063DF7G0080**

Ø80mm - (G1/8)

Stroke mm	Order code
5	**P1PS080DF7G0005**
10	**P1PS080DF7G0010**
15	**P1PS080DF7G0015**
20	**P1PS080DF7G0020**
25	**P1PS080DF7G0025**
30	**P1PS080DF7G0030**
40	**P1PS080DF7G0040**
50	**P1PS080DF7G0050**
60	**P1PS080DF7G0060**
80	**P1PS080DF7G0080**
100	**P1PS080DF7G0100**

Ø100mm - (G1/8)

Stroke mm	Order code
10	**P1PS100DF7G0010**
15	**P1PS100DF7G0015**
20	**P1PS100DF7G0020**
25	**P1PS100DF7G0025**
30	**P1PS100DF7G0030**
40	**P1PS100DF7G0040**
50	**P1PS100DF7G0050**
60	**P1PS100DF7G0060**
80	**P1PS100DF7G0080**
100	**P1PS100DF7G0100**

www.comoso.com

Double acting - Low temperature

This P1P cylinder version is developed for use in temperatures down to -40°C.
It is available in bore sizes 20 - 100 mm.
With the combination of compactness and corrosion resistance the P1P low temperature version can be used in many industries e.g. Bus, Truck and Rail applications.

Double acting - Low temperature - Female threaded piston rod

Ø20mm - (M5)

Stroke mm	Order code
5	**P1PS020DL7G0005**
10	**P1PS020DL7G0010**
15	**P1PS020DL7G0015**
20	**P1PS020DL7G0020**
25	**P1PS020DL7G0025**
30	**P1PS020DL7G0030**
40	**P1PS020DL7G0040**
50	**P1PS020DL7G0050**
60	**P1PS020DL7G0060**

Ø25mm - (M5)

Stroke mm	Order code
5	**P1PS025DL7G0005**
10	**P1PS025DL7G0010**
15	**P1PS025DL7G0015**
20	**P1PS025DL7G0020**
25	**P1PS025DL7G0025**
30	**P1PS025DL7G0030**
40	**P1PS025DL7G0040**
50	**P1PS025DL7G0050**
60	**P1PS025DL7G0060**

Ø32mm - (G1/8)

Stroke mm	Order code
5	**P1PS032DL7G0005**
10	**P1PS032DL7G0010**
15	**P1PS032DL7G0015**
20	**P1PS032DL7G0020**
25	**P1PS032DL7G0025**
30	**P1PS032DL7G0030**
40	**P1PS032DL7G0040**
50	**P1PS032DL7G0050**
60	**P1PS032DL7G0060**
80	**P1PS032DL7G0080**

Ø40mm - (G1/8)

Stroke mm	Order code
5	**P1PS040DL7G0005**
10	**P1PS040DL7G0010**
15	**P1PS040DL7G0015**
20	**P1PS040DL7G0020**
25	**P1PS040DL7G0025**
30	**P1PS040DL7G0030**
40	**P1PS040DL7G0040**
50	**P1PS040DL7G0050**
60	**P1PS040DL7G0040**
80	**P1PS040DL7G0050**

Ø50mm - (G1/8)

Stroke mm	Order code
5	**P1PS050DL7G0005**
10	**P1PS050DL7G0010**
15	**P1PS050DL7G0015**
20	**P1PS050DL7G0020**
25	**P1PS050DL7G0025**
30	**P1PS050DL7G0030**
40	**P1PS050DL7G0040**
50	**P1PS050DL7G0050**
60	**P1PS050DL7G0060**
80	**P1PS050DL7G0080**

Ø63mm - (G1/8)

Stroke mm	Order code
5	**P1PS063DL7G0005**
10	**P1PS063DL7G0010**
15	**P1PS063DL7G0015**
20	**P1PS063DL7G0020**
25	**P1PS063DL7G0025**
30	**P1PS063DL7G0030**
40	**P1PS063DL7G0040**
50	**P1PS063DL7G0050**
60	**P1PS063DL7G0060**
80	**P1PS063DL7G0080**

Ø80mm - (G1/8)

Stroke mm	Order code
5	**P1PS080DL7G0005**
10	**P1PS080DL7G0010**
15	**P1PS080DL7G0015**
20	**P1PS080DL7G0020**
25	**P1PS080DL7G0025**
30	**P1PS080DL7G0030**
40	**P1PS080DL7G0040**
50	**P1PS080DL7G0050**
60	**P1PS080DL7G0060**
80	**P1PS080DL7G0080**
100	**P1PS080DL7G0100**

Ø100mm - (G1/8)

Stroke mm	Order code
10	**P1PS100DL7G0010**
15	**P1PS100DL7G0015**
20	**P1PS100DL7G0020**
25	**P1PS100DL7G0025**
30	**P1PS100DL7G0030**
40	**P1PS100DL7G0040**
50	**P1PS100DL7G0050**
60	**P1PS100DL7G0060**
80	**P1PS100DL7G0080**
100	**P1PS100DL7G0100**

Sensors

For sensors see page 25.

www.comoso.com

Dimensions - Bore 20 - 63mm

P1PS...DS7G Double acting with female piston rod thread

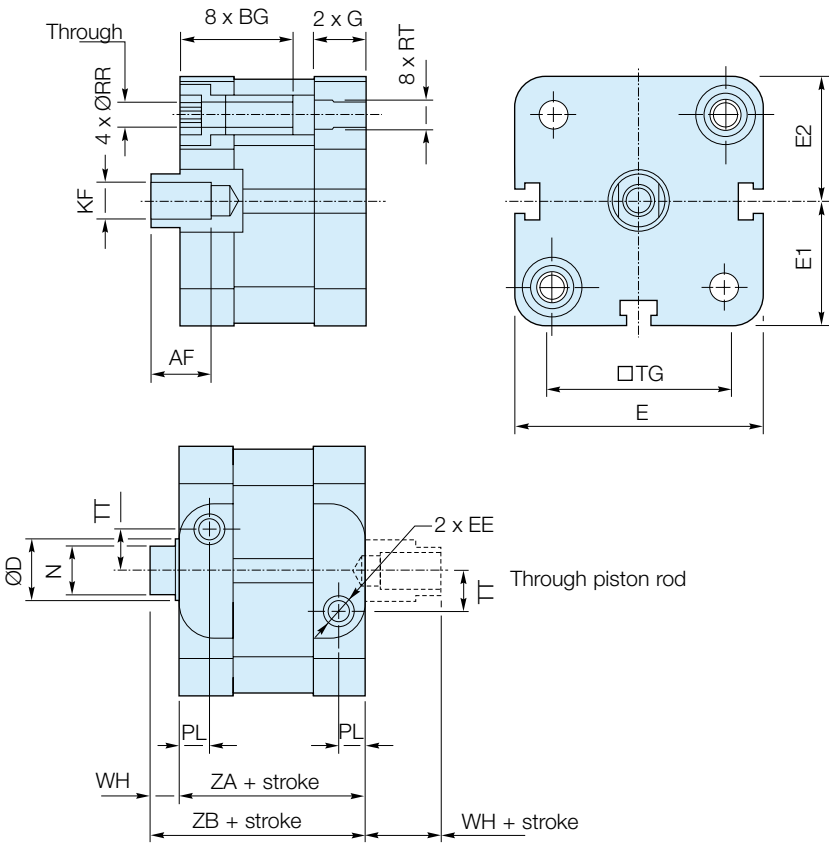

P1PG...DS Double acting with guided piston rod

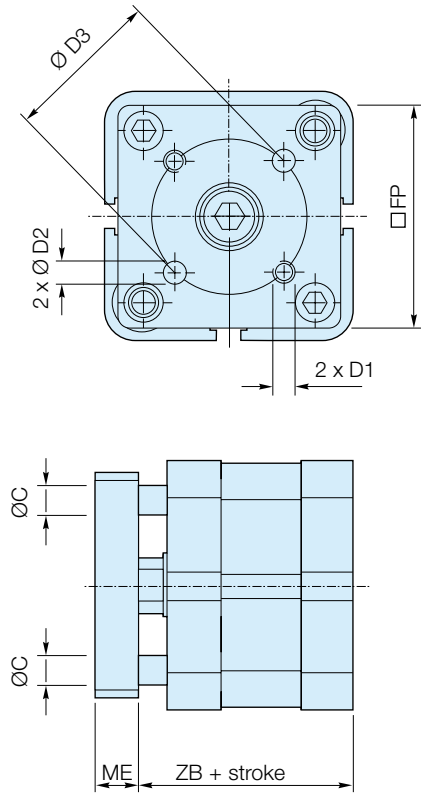

Bore size	AF min	BG min	ØC	ØD	D1	ØD2 H8	ØD3	EE	E	E1	E2	FP	G	KF	ME	N h14	PL	ØRR min	RT	TG	TT	WH	ZA ± 0,3	ZB ± 0,6
Ø20	10	15	6	10	M4	4	17	M5	38,0	19,0	19,1	35	11,60	M6	8	8	7,6	4,1	M5	22,0	4,0	6	37	43
Ø25*	10	15	6	10	M5	5	22	M5	41,0	20,5	20,6	38	11,90	M6	8	8	7,5	4,1	M5	26,0	5,5	6	39	45
Ø32	12	16	6	12	M5	5	28	G1/8	49,4	24,7	24,9	45	15,25	M8	10	10	7,8	5,1	M6	32,5	6,5	7	44	51
Ø40	12	16	6	12	M5	5	33	G1/8	56,0	28,0	28,5	50	15,25	M8	10	10	8,0	5,1	M6	38,0	8,0	7	45	52
Ø50	16	16	8	16	M6	6	42	G1/8	67,0	33,5	33,7	60	14,30	M10	12	13	7,7	6,4	M8	46,5	11,0	8	45	53
Ø63	16	16	8	16	M6	6	50	G1/8	79,0	39,5	39,8	70	16,30	M10	12	13	8,0	6,4	M8	56,5	16,0	8	49	57

*** Note:** 25mm stroke single acting cylinders have the same dimensions as 25mm stroke double acting cylinders.

P1PS...DS8G Double acting with male piston rod thread

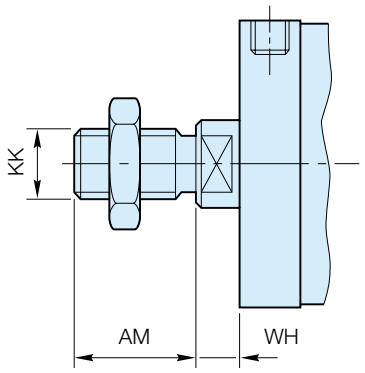

Bore size	AM +0 -0.5	WH nom.	WH tol.	KK
Ø20	16	6	± 1,6	M8 x 1,25
Ø25	16	6	± 1,6	M8 x 1,25
Ø32	19	7	± 1,6	M10 x 1,25
Ø40	19	7	± 1,6	M10 x 1,25
Ø50	22	8	± 1,6	M12 x 1,25
Ø63	22	8	± 1,6	M12 x 1,25

Note: Cylinders with male piston rod thread are delivered with one piston rod nut in zinc plated steel

www.comoso.com

Dimensions - Bore 80 - 100mm

P1PS...DS7G Double acting with female piston rod thread

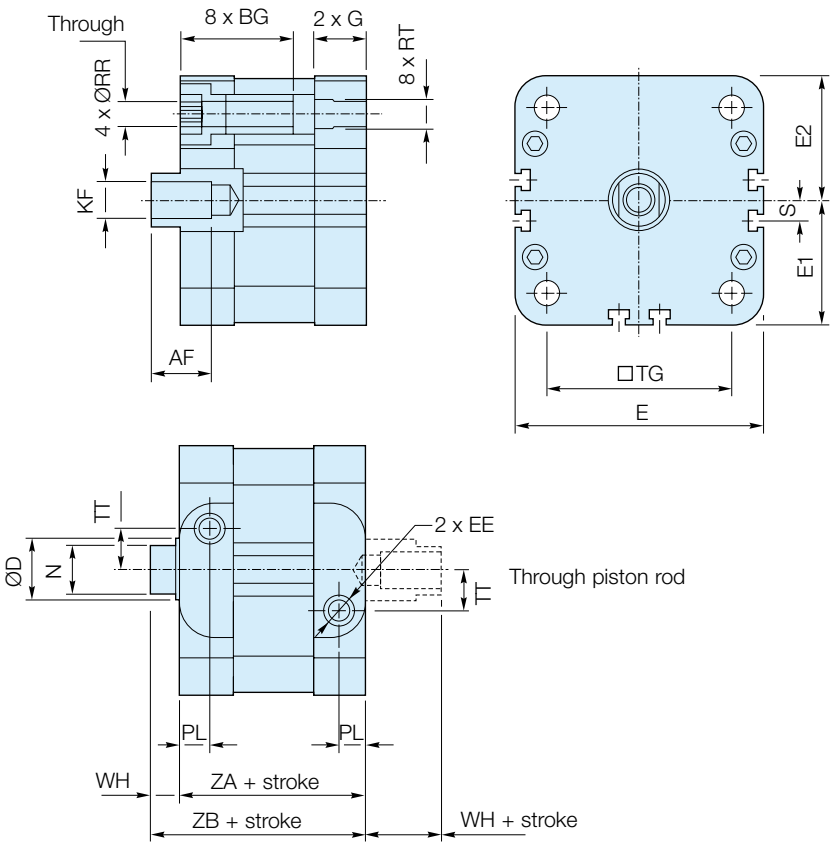

P1PG...DS Double acting with guided piston rod

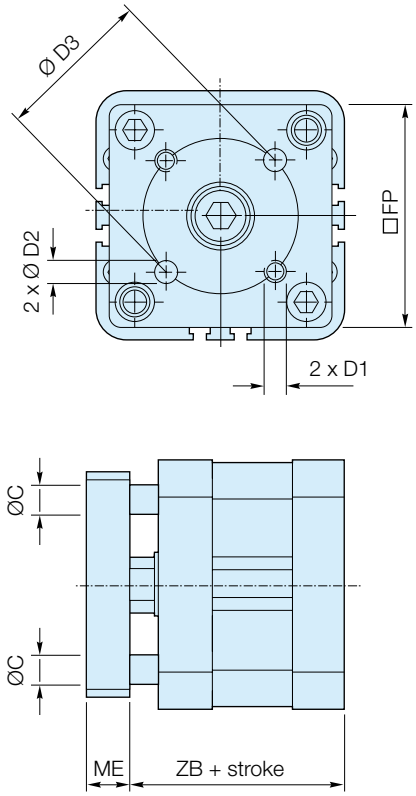

Bore size	AF min	BG min	ØC	ØD	D1	ØD2 H8	ØD3	EE	E	E1	E2	FP	G	KF	ME	N h14	PL	ØRR min	RT	S	TG	TT	WH ± 0,3	ZA ± 0,6	ZB
Ø80	20	17	10	20	M8	8	65	G1/8	96	48,0	48,2	90	17,7	M12	14	17	10,5	8,4	M10	8	72	20	10	54	64
Ø100	20	17	10	25	M10	10	80	G1/8	115	57,5	57,7	110	23,0	M12	14	21	12,0	8,4	M10	18,5	89	24	10	67	77

P1PS...DS8G Double acting with male piston rod thread

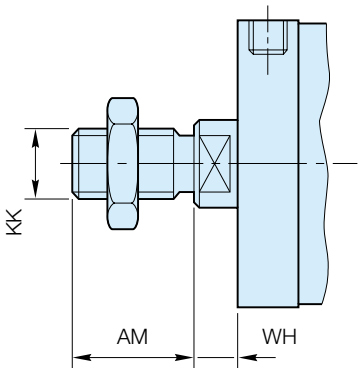

Bore size	AM +0 -0.5	WH nom.	WH tol.	KK
Ø80	28	10	± 1,6	M16 x 1,5
Ø100	28	10	± 1,6	M16 x 1,5

Note: Cylinders with male piston rod thread are delivered with one piston rod nut in zinc plated steel

www.comoso.com

Compact ISO Cylinders - P1P Series

	Flange MF1 / MF2 [1]	Foot brackets MS1 [2]	Pivot bracket with rigid bearing AB7 [3]	Clevis bracket MP2 [4]	Clevis bracket MP4 [5]
Ø 20	P1P-4HMB	P1P-4HMF			P1P-4HME
Ø 25	P1P-4JMB	P1P-4JMF			P1P-4JME
Ø 32	P1C-4KMB	P1C-4KMF	P1C-4KMD	P1C-4KMT	P1C-4KME
Ø 40	P1C-4LMB	P1C-4LMF	P1C-4LMD	P1C-4LMT	P1C-4LME
Ø 50	P1C-4MMB	P1C-4MMF	P1C-4MMD	P1C-4MMT	P1C-4MME
Ø 63	P1C-4NMB	P1C-4NMF	P1C-4NMD	P1C-4NMT	P1C-4NME
Ø 80	P1C-4PMB	P1C-4PMF	P1C-4PMD	P1C-4PMT	P1C-4PME
Ø 100	P1C-4QMB	P1C-4QMF	P1C-4QMD	P1C-4QMT	P1C-4QME

	Clevis bracket AB6 [6]	Pivot bracket with swivel bearing CS7 [7]	Swivel eye bracket MP6 [8]	3 and 4 positions flange JP1	Swivel rod eye AP6 [10]
Ø 20					P1A-4HRS
Ø 25					P1A-4HRS
Ø 32	P1C-4KMCA	P1C-4KMA	P1C-4KMSA	P1E-6KB0	P1C-4KRS
Ø 40	P1C-4LMCA	P1C-4LMA	P1C-4LMSA	P1E-6LB0	P1C-4KRS
Ø 50	P1C-4MMCA	P1C-4MMA	P1C-4MMSA	P1E-6MB0	P1C-4LRS
Ø 63	P1C-4NMCA	P1C-4NMA	P1C-4NMSA	P1E-6NB0	P1C-4LRS
Ø 80	P1C-4PMCA	P1C-4PMA	P1C-4PMSA	P1E-6PB0	P1C-4MRS
Ø 100	P1C-4QMCA	P1C-4QMA	P1C-4QMSA	P1E-6QB0	P1C-4MRS

	Clevis [11] AP2	Flexo coupling [12] PM5	Nut MR9 (Pack of 10 off)
Ø 20	P1A-4HRC	P1C-4HRF	P14-4HRPZ
Ø 25	P1A-4HRC	P1C-4HRF	P14-4HRPZ
Ø 32	P1C-4KRC	P1C-4KRF	P14-4KRPZ
Ø 40	P1C-4KRC	P1C-4KRF	P14-4KRPZ
Ø 50	P1C-4LRC	P1C-4LRF	P14-4LRPZ
Ø 63	P1C-4LRC	P1C-4LRF	P14-4LRPZ
Ø 80	P1C-4MRC	P1C-4MRF	P14-4MRPZ
Ø 100	P1C-4MRC	P1C-4MRF	P14-4MRPZ

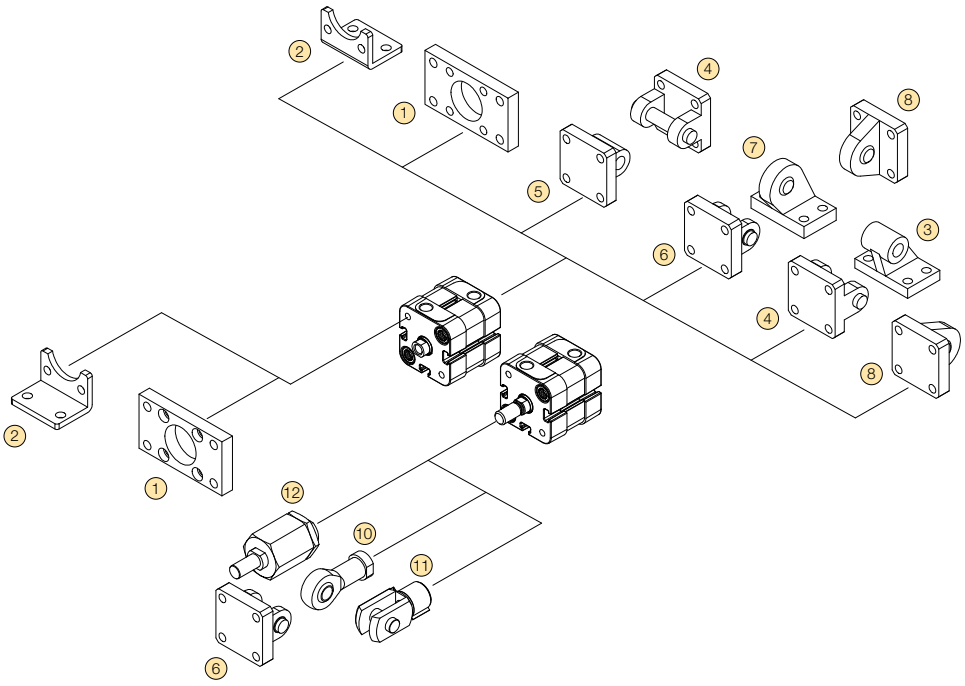

www.comoso.com

Cylinder mountings

Flange MF1/MF2

Intended for fixed mounting of cylinder. Flange can be fitted to front- or rear end-plates of cylinder.

Materials
Flange: Surface-treated steel
Mounting screws according to DIN 6912: Zinc-plated steel 8.8

Supplied complete with mounting screws for attachment to cylinder.

Cyl. bore Ø mm	Weight kg	Order code
20	0,17	**P1P-4HMB**
25	0,20	**P1P-4JMB**
32	0,23	**P1C-4KMB**
40	0,28	**P1C-4LMB**
50	0,53	**P1C-4MMB**
63	0,71	**P1C-4NMB**
80	1,59	**P1C-4PMB**
100	2,19	**P1C-4QMB**

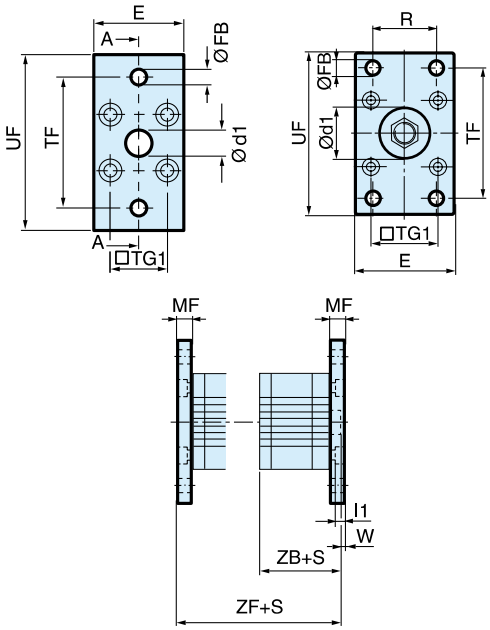

Cyl. bore mm	d1 H11 mm	FB H13 mm	TG1 mm	E mm	R JS14 mm	MF JS14 mm	TF JS14 mm	UF mm	l1 -0,5 mm	W mm	ZF* mm	ZB* mm
20	12,0	6,6	22,0	36	-	10,0	55,0	70	5,4	4,0	53,0	43,0
25	12,0	6,6	26,0	40	-	10,0	60,0	76	5,4	4,0	55,0	45,0
32	30,0	7,0	32,5	45	32	10,0	64,0	80	5,0	3,0	61,0	41,0
40	35,0	9,0	38,0	52	36	10,0	72,0	90	5,0	3,0	52,0	52,0
50	40,0	9,0	46,5	65	45	12,0	90,0	110	6,5	4,0	65,0	53,0
63	45,0	9,0	56,5	75	50	12,0	100,0	120	6,5	4,0	69,0	57,0
80	45,0	12,0	72,0	95	63	16,0	126,0	150	8,0	6,0	80,0	64,0
100	55,0	14,0	89,0	115	75	16,0	150,0	170	8,0	6,0	93,0	77,0

S = Stroke length

Foot brackets MS1

Intended for fixed mounting of cylinder. Angle bracket can be fitted to front- and rear end-plates of cylinder.

Materials
Foot bracket: Surface-treated steel
Mounting screws according to DIN 912:
Zinc-plated steel 8.8

Supplied in pairs with mounting screws for attachment to cylinder.

Cyl. bore Ø mm	Weight kg	Order code
20	0,04**	**P1P-4HMF**
25	0,05**	**P1P-4JMF**
32	0,06**	**P1C-4KMF**
40	0,08**	**P1C-4LMF**
50	0,16**	**P1C-4MMF**
63	0,25**	**P1C-4NMF***
80	0,50**	**P1C-4PMF**
100	0,85**	**P1C-4QMF***

** Weight per item

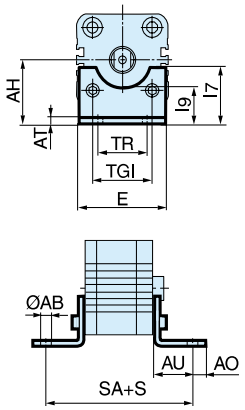

Cyl. bore mm	AB H14 mm	TG1 mm	E mm	TR JS14 mm	AO mm	AU mm	AH JS15 mm	l7 mm	AT mm	l9 JS14 mm	SA** mm
20	6,6	22,0	36	26	6,0	16,0	27	22,0	4,0	17,0	69,0
25	6,6	26,0	40	26	6,0	16,0	30	23,0	4,0	19,0	71,0
32	7,0	32,5	45	32	10,0	24,0	32	30,0	4,5	17,5	92,0
40	9,0	38,0	52	36	8,0	28,0	36	30,0	4,5	18,5	101,0
50	9,0	46,5	65	45	13,0	32,0	45	36,0	5,5	25,0	109,0
63	9,0	56,5	75	50	13,0	32,0	50	35,0	5,5	27,5	113,0
80	12,0	72,0	95	63	14,0	41,0	63	49,0	6,5	40,5	136,0
100	14,0	89,0	115	75	15,0	41,0	71	54,0	6,5	43,5	149,0

S = Stroke length

www.comoso.com

Cylinder mountings

Pivot bracket with rigid bearing AB7

Intended for flexible mounting of cylinder. The pivot bracket can be combined with clevis bracket MP2.

Materials
Pivot bracket: Surface-treated aluminium, black
Bearing: Sintered oil-bronze bushing

Cyl. bore Ø mm	Weight kg	Order code
32	0,06	**P1C-4KMD**
40	0,08	**P1C-4LMD**
50	0,15	**P1C-4MMD**
63	0,20	**P1C-4NMD**
80	0,33	**P1C-4PMD**
100	0,49	**P1C-4QMD**

Cyl. bore mm	CK H9 mm	S5 H13 mm	K1 JS14 mm	K2 mm	G1 JS14 mm	G2 JS14 mm	EM mm	G3 mm	CA JS15 mm	H6 mm	R1 mm
32	10	6,6	38	51	21	18	25,5	31	32	8	10
40	12	6,6	41	54	24	22	27,0	35	36	10	11
50	12	9,0	50	65	33	30	31,0	45	45	12	13
63	16	9,0	52	67	37	35	39,0	50	50	12	15
80	16	11,0	66	86	47	40	49,0	60	63	14	15
100	20	11,0	76	96	55	50	59,0	70	71	15	19

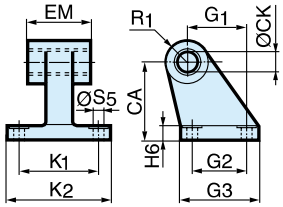

Clevis bracket MP2

Intended for flexible mounting of cylinder. Clevis bracket MP2 can be combined with clevis bracket MP4.

Materials
Clevis bracket: Surface-treated aluminium, black
Mounting screws according to DIN 912:
Zinc-plated steel 8.8
Pin: surface treated steel

Supplied complete with mounting screws for attachment to cylinder.

Cyl. bore Ø mm	Weight kg	Order code
32	0,08	**P1C-4KMT**
40	0,11	**P1C-4LMT**
50	0,14	**P1C-4MMT**
63	0,29	**P1C-4NMT**
80	0,36	**P1C-4PMT**
100	0,64	**P1C-4QMT**

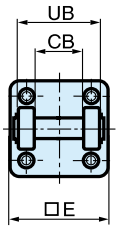

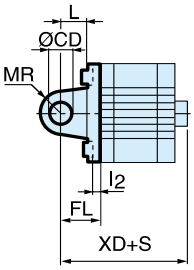

Cyl. bore mm	E mm	UB h14 mm	CB H14 mm	FL ±0,2 mm	L mm	l2 mm	CD H9 mm	MR mm	XD* mm
32	45,0	45	26,0	22	13	5,5	10	10	73,0
40	52,0	52	28,0	25	16	5,5	12	12	77,0
50	65,0	60	32,0	27	16	6,5	12	12	80,0
63	75,0	70	40,0	32	21	6,5	16	16	89,0
80	95,0	90	50,0	36	22	10,0	16	16	100,0
100	115,0	110	60,0	41	27	10,0	20	20	118,0

S = Stroke length

www.comoso.com

Cylinder mountings

Clevis bracket MP4

Intended for flexible mounting of cylinder. Clevis bracket MP4 can be combined with clevis bracket MP2.

Materials
Clevis bracket: Surface-treated aluminium, black
Mounting screws according to DIN 912: Zinc-plated steel 8.8

Supplied complete with mounting screws for attachment to cylinder.

Cyl. bore Ø mm	Weight kg	Order code
20	0.04	**P1P-4HME**
25	0.05	**P1P-4JME**
32	0,09	**P1C-4KME**
40	0,13	**P1C-4LME**
50	0,17	**P1C-4MME**
63	0,36	**P1C-4NME**
80	0,46	**P1C-4PME**
100	0,83	**P1C-4QME**

Cyl. bore mm	E mm	EW mm	FL ±0,2 mm	L mm	l2 mm	CD H9 mm	MR mm	XD* mm
20	34,0	16,0	20	14	2,6	8	8	63,0
25	38,0	16,0	20	14	2,6	8	8	65,0
32	45,0	26,0	22	13	5,5	10	10	73,0
40	52,0	28,0	25	16	5,5	12	12	77,0
50	65,0	32,0	27	16	6,5	12	12	80,0
63	75,0	40,0	32	21	6,5	16	16	89,0
80	95,0	50,0	36	22	10,0	16	16	100,0
100	115,0	60,0	41	27	10,0	20	20	118,0

S = Stroke length

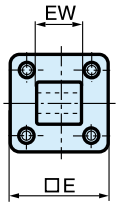

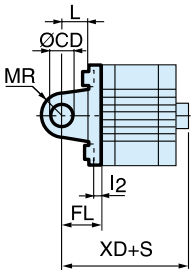

Clevis bracket AB6

Intended for flexible mounting of cylinder. Clevis bracket GA can be combined with pivot bracket with swivel bearing, swivel eye bracket and swivel rod eye.

Materials
Clevis bracket: Surface-treated aluminium, black
Pin: Surface hardened steel
Locking pin: Spring steel
Circlips according to DIN 471: Spring steel
Mounting screws acc. to DIN 912: Zinc-plated steel 8.8

Supplied complete with mounting screws for attachment to cylinder.

Cyl. bore Ø mm	Weight kg	Order code
32	0,09	**P1C-4KMCA**
40	0,13	**P1C-4LMCA**
50	0,17	**P1C-4MMCA**
63	0,36	**P1C-4NMCA**
80	0,58	**P1C-4PMCA**
100	0,89	**P1C-4QMCA**

Cyl. bore mm	E mm	B2 d12 mm	B1 H14 mm	T mm	B3 mm	R2 mm	L1 mm	FL ±0,2 mm	l2 mm	L mm	CN F7 mm	R1 mm	XD* mm
32	45	34	14	3	3,3	17	11,5	22	5,5	12	10	11	73,0
40	52	40	16	4	4,3	20	12,0	25	5,5	15	12	13	77,0
50	65	45	21	4	4,3	22	14,0	27	6,5	17	16	18	80,0
63	75	51	21	4	4,3	25	14,0	32	6,5	20	16	18	89,0
80	95	65	25	4	4,3	30	16,0	36	10,0	20	20	22	100,0
100	115	75	25	4	4,3	32	16,0	41	10,0	25	20	22	118,0

S = Stroke length

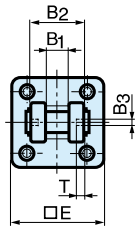

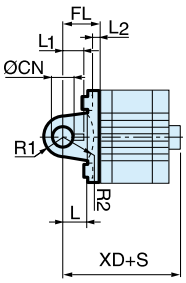

Stainless steel Pin Set AB6
Materials
Pin: Stainless steel
Locking pin: Stainless steel
Circlips according to DIN 471: Stainless steel

Cyl. bore Ø mm	Weight kg	Order code
32	0,05	**9301054311**
40	0,06	**9301054312**
50	0,07	**9301054313**
63	0,07	**9301054314**
80	0,17	**9301054315**
100	0,31	**9301054316**

www.comoso.com

Cylinder mountings

Pivot bracket with swivel bearing CS7

Intended for use together with clevis bracket GA.

Material
Pivot bracket: Surface-treated steel, black
Swivel bearing according to DIN 648K: Hardened steel

Cyl. bore Ø mm	Weight kg	Order code
32	0,18	**P1C-4KMA**
40	0,25	**P1C-4LMA**
50	0,47	**P1C-4MMA**
63	0,57	**P1C-4NMA**
80	1,05	**P1C-4PMA**
100	1,42	**P1C-4QMA**

Cyl. bore mm	CN H7 mm	S5 H13 mm	K1 JS14 mm	K2 mm	EU mm	G1 JS14 mm	G2 JS14 mm	EN mm	G3 mm	CH JS15 mm	H6 mm	ER mm	Z
32	10	6,6	38	51	10,5	21	18	14	31	32	10	16	4°
40	12	6,6	41	54	12,0	24	22	16	35	36	10	18	4°
50	16	9,0	50	65	15,0	33	30	21	45	45	12	21	4°
63	16	9,0	52	67	15,0	37	35	21	50	50	12	23	4°
80	20	11,0	66	86	18,0	47	40	25	60	63	14	28	4°
100	20	11,0	76	96	18,0	55	50	25	70	71	15	30	4°

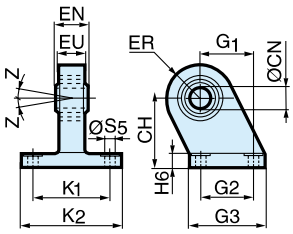

Swivel eye bracket MP6

Intended for use together with clevis bracket GA

Material
Bracket: Surface-treated aluminium, black
Swivel bearing acc. to DIN 648K: Hardened steel

Supplied complete with mounting screws for attachment to cylinder.

Cyl. bore Ø mm	Weight kg	Order code
32	0,08	**P1C-4KMSA**
40	0,11	**P1C-4LMSA**
50	0,20	**P1C-4MMSA**
63	0,27	**P1C-4NMSA**
80	0,52	**P1C-4PMSA**
100	0,72	**P1C-4QMSA**

Cyl. bore mm	E mm	B1 mm	B2 mm	EN mm	R1 mm	R2 mm	FL mm	l2 mm	L mm	CN H7 mm	XD* mm	Z mm
32	45	10,5	38	14	16	14	22	5,5	12	10	73,0	4°
40	52	12,0	44	16	18	16	25	5,5	15	12	77,0	4°
50	65	15,0	51	21	21	19	27	6,5	15	16	80,0	4°
63	75	15,0	56	21	23	22	32	6,5	20	16	89,0	4°
80	95	18,0	-	25	29	-	36	10,0	20	20	100,0	4°
100	115	18,0	-	25	31	-	41	10,0	25	20	118,0	4°

S=Stroke length

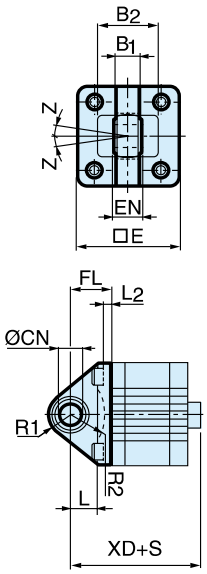

www.comoso.com

Cylinder mountings

3 and 4 positions flange JP1

Mounting kit for back to back mounted cylinders, 3 and 4 position cylinders.

Material:
Mounting: Aluminium
Mounting screws: Zinc-plated steel 8.8

Cyl. bore Ø mm	Weight kg	Order code
32	0,060	**P1E-6KB0**
40	0,078	**P1E-6LB0**
50	0,162	**P1E-6MB0**
63	0,194	**P1E-6NB0**
80	0,450	**P1E-6PB0**
100	0,672	**P1E-6QB0**

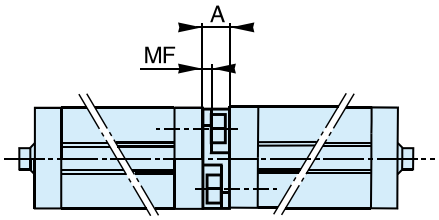

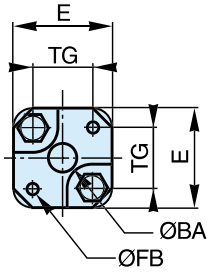

Cyl. bore mm	E mm	TG mm	ØFB mm	MF mm	A mm	ØBA mm
32	50	32,5	6,5	5	16	30
40	60	38,0	6,5	5	16	35
50	66	46,5	8,5	6	20	40
63	80	56,5	8,5	6	20	45
80	100	72,0	10,5	8	25	45
100	118	89,0	10,5	8	25	55

www.comoso.com

Piston rod mountings

Swivel rod eye AP6

Swivel rod eye for articulated mounting of cylinder. Swivel rod eye can be combined with clevis bracket GA.
Maintenance-free.

Materials
Swivel rod eye: Zinc-plated steel
Swivel bearing according to DIN 648K: Hardened steel

Cyl. bore Ø mm	Weight kg	Order code
20 / 25	0,045	**P1A-4HRS**
32 / 40	0,08	**P1C-4KRS**
50 / 63	0,12	**P1C-4LRS**
80 / 100	0,25	**P1C-4MRS**

Stainless steel swivel rod eye AP6

Stainless-steel swivel rod eye for articulated mounting of cylinder. Swivel rod eye can be combined with clevis bracket GA.
Maintenance-free.

Materials
Swivel rod eye: Stainless steel
Swivel bearing according to DIN 648K: Stainless steel

Use stainless steel nut with stainless steel swivel rod eye.

Cyl. bore Ø mm	Weight kg	Order code
20 / 25	0,045	**P1S-4HRT**
32 / 40	0,08	**P1S-4JRT**
50 / 63	0,12	**P1S-4LRT**
80 / 100	0,25	**P1S-4MRT**

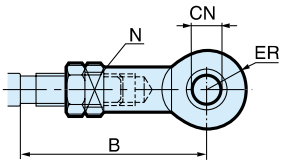

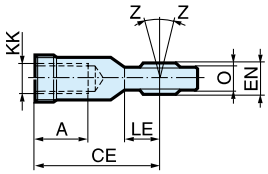

According to ISO 8139

Cyl. bore mm	A mm	B min mm	B max mm	CE mm	CN H9 mm	EN h12 mm	ER mm	KK	LE mm	N min mm	O mm	Z
20 / 25	12	40,0	45	36	8	12	12	M8x1,25	12	13	9,0	12°
32 / 40	20	48,0	55	43	10	14	14	M10x1,25	15	17	10,5	12°
50 / 63	22	56,0	62	50	12	16	16	M12x1,25	17	19	12,0	12°
80 / 100	28	72,0	80	64	16	21	21	M16x1,5	22	22	15,0	15°

Clevis AP2

Clevis for articulated mounting of cylinder.

Material
Clevis, clip: Galvanized steel
Pin: Hardened steel

Cyl. bore Ø mm	Weight kg	Order code
20 / 25	0,045	**P1A-4HRC**
32 / 40	0,09	**P1C-4KRC**
50 / 63	0,15	**P1C-4LRC**
80 / 100	0,35	**P1C-4MRC**

Stainless steel clevis AP2

Stainless-steel clevis for articulated mounting of cylinder.

Material
Clevis: Stainless steel
Pin: Stainless steel
Circlips according to DIN 471: Stainless steel

Use stainless steel nut with stainless steel swivel rod eye.

Cyl. bore Ø mm	Weight kg	Order code
20 / 25	0,045	**P1S-4HRD**
32 / 40	0,09	**P1S-4JRD**
50 / 63	0,15	**P1S-4LRD**
80 / 100	0,35	**P1S-4MRD**

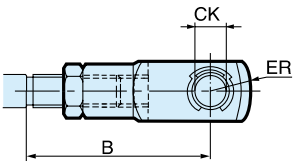

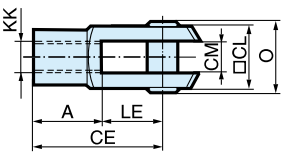

According to ISO 8140

Cyl. bore mm	A mm	B min mm	B max mm	CE mm	CK h11/E9 mm	CL mm	CM mm	ER mm	KK	LE mm	O mm
20 / 25	16	36,0	41	32	8	16	8	-	M8x1,25	16	24,0
32 / 40	20	45,0	52	40	10	20	10	16	M10x1,25	20	28,0
50 / 63	24	54,0	60	48	12	24	12	19	M12x1,25	24	32,0
80 / 100	32	72,0	80	64	16	32	16	25	M16x1,5	32	41,5

www.comoso.com

Piston rod mountings

Flexo coupling PM5

Flexo coupling for articulated mounting of piston rod. Flexo fitting is intended to take up axial angle errors within a range of ±4°.

Material
Flexo coupling, nut: Zinc-plated steel

Supplied complete with galvanized adjustment nut.

Cyl. bore Ø mm	Weight kg	Order code
20 / 25	0,06	**P1C-4HRF**
32 / 40	0,23	**P1C-4KRF**
50 / 63	0,23	**P1C-4LRF**
80 / 100	0,65	**P1C-4MRF**

Cyl. bore mm	KK mm	B mm	C mm	D mm	E mm	ØF mm	SW1 mm	SW2 mm	SW3 mm	SW4 mm	SW5 mm
20 / 25	M8x1.25	16	14	55	20	12.4	7	17	17	10	13
32 / 40	M10x1.25	20	23	73	31	21	12	30	30	19	17
50 / 63	M12x1.5	24	23	77	31	21	12	30	30	19	19
80 / 100	M16x1.5	32	32	108	45	33.5	19	41	41	30	24

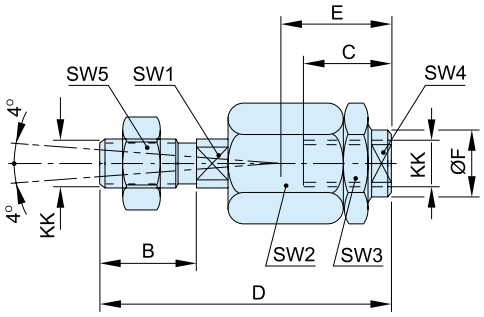

Nut MR9

Intended for fixed mounting of accessories to the piston rod.
Material: Zinc-plated steel

All P1D cylinders are delivered with a zinc-plated steel piston rod nut.

Supplied as pack of 10 off

Cyl. bore Ø mm	Weight * kg	Order code
20 / 25	0,005	**P14-4HRPZ**
32 / 40	0,007	**P14-4KRPZ**
50 / 63	0,021	**P14-4LRPZ**
80 / 100	0,040	**P14-4MRPZ**

* Weight per item

Stainless steel nut MR9

Intended for fixed mounting of accessories to the piston rod.

Material: Stainless steel A2

All P1D cylinders are delivered with a zinc-plated steel piston rod nut.

Supplied as pack of 10 off

Cyl. bore Ø mm	Weight * kg	Order code
20 / 25	0,005	**P14-4HRPS**
32 / 40	0,007	**P14-4KRPS**
50 / 63	0,021	**P14-4LRPS**
80 / 100	0,040	**P14-4MRPS**

* Weight per item

According to DIN 439 B

Cyl. bore mm	d	M mm	S mm
20 / 25	M8x1,25		
32 / 40	M10x1,25	5,0	17
50 / 63	M12x1,25	6,0	19
80 / 100	M16x1,5	10,0	30

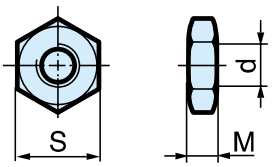

www.comoso.com

Drop-in sensors

The ”drop-in” sensors can easily be installed from the side in the sensor groove, at any position along the piston stroke. The sensors are completely recessed and thus mechanically protected. Choose between electronic or reed sensors and several cable lengths and 8 mm and M12 connectors. The same standard sensors are used for all versions.

Please note that for low temperature applications sensors are normally specified for full performance down to -25°C only. High temperature cylinders do not have a magnetic ring in the piston and therefore cannot be used with sensors.

Electronic sensors

The electronic sensors are ”Solid State”, i.e. they have no moving parts at all. They are provided with short-circuit protection and transient protection as standard. The built-in electronics make the sensors suitable for applications with high on and off switching frequency, and where very long service life is required.

Technical data

Design	GMR (Giant Magnetic Resistance) magneto-resistive function
Installation	From side, down into the sensor groove, so-called drop-in
Outputs	PNP, normally open (also available in NPN design, normally closed, on request)
Voltage range	10-30 VDC 10-18 V DC, ATEX sensor
Ripple	max 10%
Voltage drop	max 2,5 V
Load current	max 100 mA
Internal consumption	max 10 mA
Actuating distance	min 9 mm
Hysteresis	max 1,5 mm
Repeatability accuracy	max 0,2 mm
On/off switching frequency	max 5 kHz
On switching time	max 2 ms
Off switching time	max 2 ms
Encapsulation	IP 67 (EN 60529)
Temperature range	–25 °C to +75 °C –20 °C to +45 °C, ATEX sensor
Indication	LED, yellow
Material housing	PA 12
Material screw	Stainless steel
Cable	PVC or PUR 3x0.25 mm^2 see order code respectively

Reed sensors

The sensors are based on proven reed switches, which offer reliable function in many applications. Simple installation, a protected position on the cylinder and clear LED indication are important advantages of this range of sensors.

Technical data

Design	Reed element
Mounting	From side, down into the sensor groove, so-called drop-in
Output	Normally open , or normally closed
Voltage range	10-30 V AC/DC or 10-120 V AC/DC 24-230 V AC/DC
Load current	max 500 mA for 10-30 V or max 100 mA for 10-120 V max 30 mA for 24-230 V
Breaking power (resistive)	max 6 W/VA
Actuating distance	min 9 mm
Hysteresis	max 1,5 mm
Repeatability accuracy	0,2 mm
On/off switching frequency	max 400 Hz
On switching time	max 1,5 ms
Off switching time	max 0,5 ms
Encapsulation	IP 67 (EN 60529)
Temperature range	–25 °C to +75 °C
Indication	LED, yellow
Material housing	PA12
Material screw	Stainless steel
Cable	PVC or PUR 3x0.14 mm^2 see order code respectively

www.comoso.com

Electronic sensors

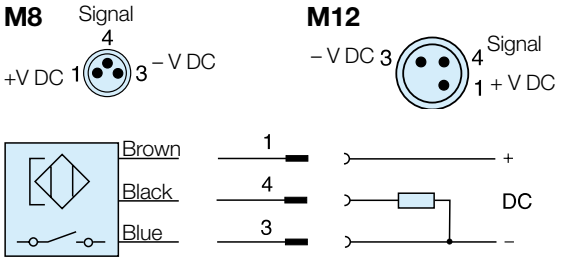

Reed sensors

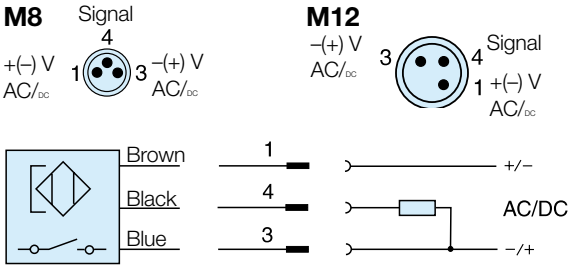

P8S-GCFPX

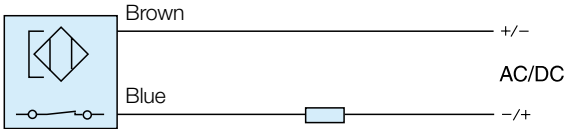

P8S-GRFLX / P8S-GRFLX2

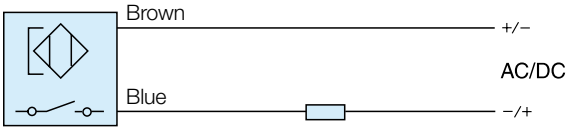

Dimensions

Sensors

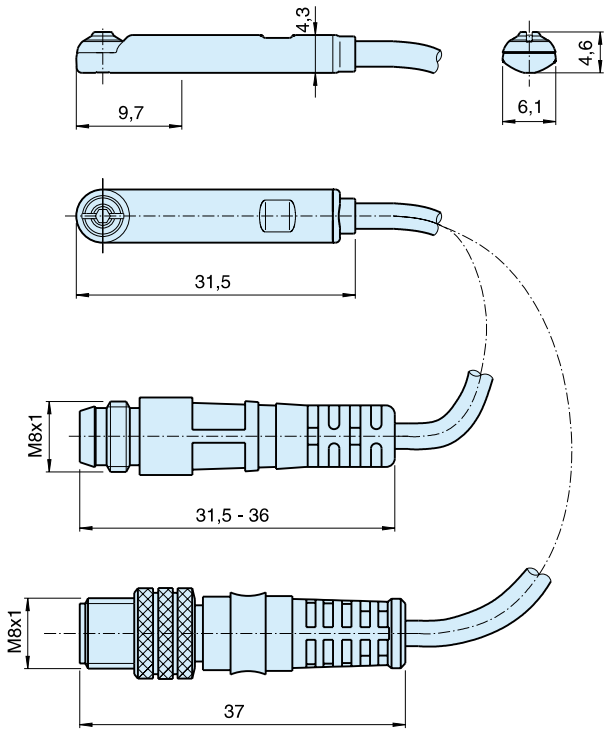

Sensor Installation

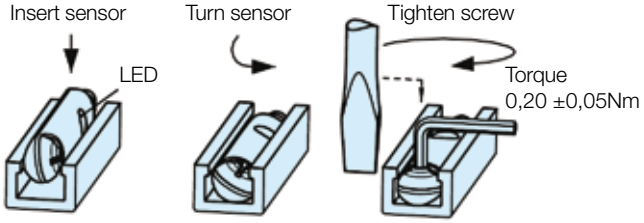

www.comoso.com

Ordering data

Output/function	Cable/connector		Weight kg	Order code
Electronic sensors , 10-30 V DC				
PNP type, normally open	0,27 m	PUR-cable and 8 mm snap-in male connector	0,007	**P8S-GPSHX**
PNP type, normally open	0,27 m	PUR-cable and M12 screw male connector	0,015	**P8S-GPMHX**
PNP type, normally open	3 m	PVC-cable without connector	0,030	**P8S-GPFLX**
PNP type, normally open	10 m	PVC-cable without connector	0,110	**P8S-GPFTX**
Reed sensors , 10-30 V AC/DC				
Normally open	0,27 m	PUR-cable and 8 mm snap-in male connector	0,007	**P8S-GSSHX**
Normally open	0,27 m	PUR-cable and M12 screw male connector	0,015	**P8S-GSMHX**
Normally open	3 m	PVC-cable without connector	0,030	**P8S-GSFLX**
Normally open	10 m	PVC-cable without connector	0,110	**P8S-GSFTX**
Normally closed	5m	PVC-cable without connector [1]	0,050	**P8S-GCFPX**
Reed sensors, 10-120 V AC/DC				
Normally open	3 m	PVC-cable without connector	0,030	**P8S-GRFLX**
Reed sensors 24-230 V AC/DC				
Normally open	3 m	PVC-cable without connector	0,030	**P8S-GRFLX2**

1) Without LED

Connecting cables with one connector

The cables have an integral snap-in female connector.

Type of cable	Cable/connector		Weight kg	Order code
Cables for sensors, complete with one female connector				
Cable, Flex PVC	3 m	8 mm Snap-in connector	0,07	**9126344341**
Cable, Flex PVC	10 m	8 mm Snap-in connector	0,21	**9126344342**
Cable, Polyurethane	3 m	8 mm Snap-in connector	0,01	**9126344345**
Cable, Polyurethane	10 m	8 mm Snap-in connector	0,20	**9126344346**
Cable, Polyurethane	5 m	M12 screw connector	0,07	**9126344348**
Cable, Polyurethane	10 m	M12 screw connector	0,20	**9126344349**

Male connectors for connecting cables

Cable connectors for producing your own connecting cables. The connectors can be quickly attached to the cable without special tools. Only the outer sheath of the cable is removed. The connectors are available for M8 and M12 screw connectors and meet protection class IP 65.

Connector	Weight kg	Order code
M8 screw connector	0,017	**P8CS0803J**
M12 screw connector	0,022	**P8CS1204J**

www.comoso.com

P1P Repair Kits

Complete seal kits consist of:
Piston (complete)
Piston rod seal
O rings

Material specification, see page 5

Order codes

Cyl.bore mm	P1P cylinder version Std temp	High temp	Low temp
20	**P1P-6HRN**	**P1P-6HRF**	**P1P-6HRL**
25	**P1P-6JRN**	**P1P-6JRF**	**P1P-6JRL**
32	**P1P-6KRN**	**P1P-6KRF**	**P1P-6KRL**
40	**P1P-6LRN**	**P1P-6LRF**	**P1P-6LRL**
50	**P1P-6MRN**	**P1P-6MRF**	**P1P-6MRL**
63	**P1P-6NRN**	**P1P-6NRF**	**P1P-6NRL**
80	**P1P-6PRN**	**P1P-6PRF**	**P1P-6PRL**
100	**P1P-6QRN**	**P1P-6QRF**	**P1P-6QRL**

Order codes

Standard temperature	30g	**9127394541**
High temperature	30g	**9127394521**
Low temperature	30g	**9127394541**

For through rods variants, order two seal kits.

Example: For a P1PS...KS Ø63 through rod, standard temperature version, order 2 x **P1P-6NRN**

Seal kit

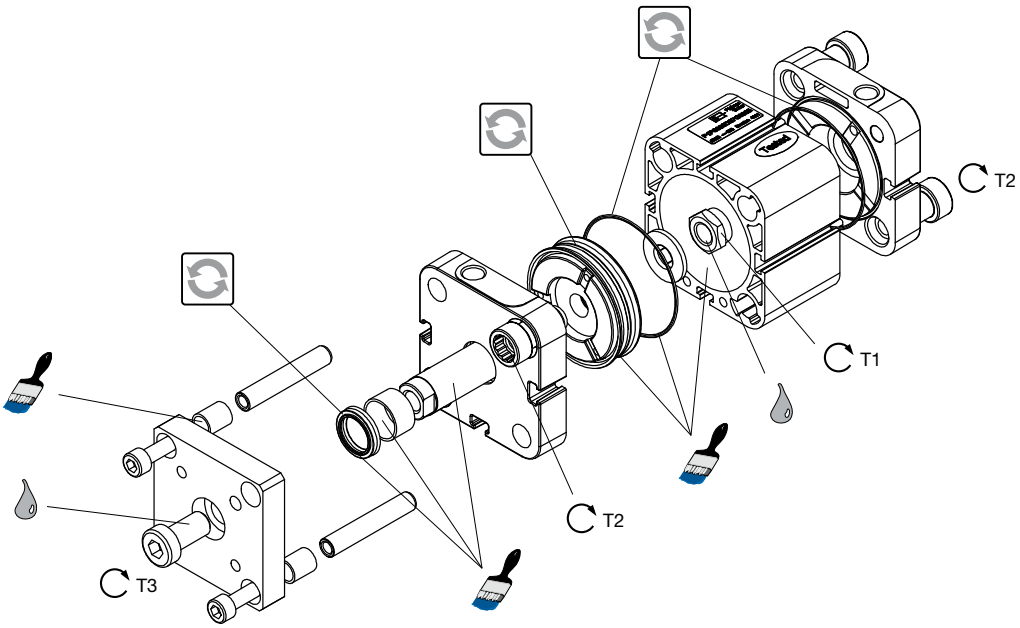

= Included in seal kit

= Lubricated with grease

= Socket head

= Locking fluid

= Tightening torque

Loctite 243 must be used for standard and low temperature versions.
Loctite 270 must be used for high temperature versions

Cyl.-dia mm	Plastic piston T1 Nm	AF mm	T2 Nm	AF mm	T3 Nm	AF mm
20	3,5	8	14	7	8	4
25	3,5	8	14	7	8	4
32	8	10	20	7	20	5
40	12	13	20	7	20	5
50	20	17	40	10	40	7
63	20	17	40	10	40	7
80	35	19	14	5	70	8
100	80	24	28	6	70	8

www.comoso.com

Specifying air quality (purity) in accordance with ISO8573-1:2010, the international standard for Compressed Air Quality

ISO8573-1 is the primary document used from the ISO8573 series as it is this document which specifies the amount of contamination allowed in each cubic metre of compressed air.

ISO8573-1 lists the main contaminants as Solid Particulate, Water and Oil. The purity levels for each contaminant are shown separately in tabular form, however for ease of use, this document combines all three contaminants into one easy to use table.

ISO8573-1:2010 CLASS	Solid Particulate				Water		Oil
	Maximum number of particles per m^3			Mass Concentration mg/m^3	Vapour Pressure Dewpoint	Liquid g/m^3	Total Oil (aerosol liquid and vapour) mg/m^3
	0,1 - 0,5 micron	0,5 - 1 micron	1 - 5 micron				
0	As specified by the equipment user or supplier and more stringent than Class 1						
1	≤ 20 000	≤ 400	≤ 10	-	≤ -70 °C	-	0,01
2	≤ 400 000	≤ 6 000	≤ 100	-	≤ -40 °C	-	0,1
3	-	≤ 90 000	≤ 1 000	-	≤ -20 °C	-	1
4	-	-	≤ 10 000	-	≤ +3 °C	-	5
5	-	-	≤ 100 000	-	≤ +7 °C	-	-
6	-	-	-	≤ 5	≤ +10 °C	-	-
7	-	-	-	5 - 10	-	≤ 0,5	-
8	-	-	-	-	-	0,5 - 5	-
9	-	-	-	-	-	5 - 10	-
X	-	-	-	> 10	-	> 10	> 10

Specifying air purity in accordance with ISO8573-1:2010

When specifying the purity of air required, the standard must always be referenced, followed by the purity class selected for each contaminant (a different purity class can be selected for each contamination if required).

An example of how to write an air quality specification is shown below:

ISO 8573-1:2010 Class 1.2.1

ISO 8573-1:2010 refers to the standard document and its revision, the three digits refer to the purity classifications selected for solid particulate, water and total oil. Selecting an air purity class of 1.2.1 would specify the following air quality when operating at the standard's reference conditions :

Class 1 - Particulate

In each cubic metre of compressed air, the particulate count should not exceed 20,000 particles in the 0.1 - 0.5 micron size range, 400 particles in the 0.5 - 1 micron size range and 10 particles in the 1 - 5 micron size range.

Class 2 - Water

A pressure dewpoint (PDP) of -40°C or better is required and no liquid water is allowed.

Class 1 - Oil

In each cubic metre of compressed air, not more than 0.01mg of oil is allowed. This is a total level for liquid oil, oil aerosol and oil vapour.

ISO8573-1:2010 Class zero

- **Class 0 does not mean zero contamination.**
- **Class 0 requires the user and the equipment manufacturer to agree contamination levels as part of a written specification.**
- **The agreed contamination levels for a Class 0 specification should be within the measurement capabilities of the test equipment and test methods shown in ISO8573 Pt 2 to Pt 9.**
- **The agreed Class 0 specification must be written on all documentation to be in accordance with the standard.**
- **Stating Class 0 without the agreed specification is meaningless and not in accordance with the standard.**
- **A number of compressor manufacturers claim that the delivered air from their oil-free compressors is in compliance with Class 0.**
- **If the compressor was tested in clean room conditions, the contamination detected at the outlet will be minimal. Should the same compressor now be installed in typical urban environment, the level of contamination will be dependent upon what is drawn into the compressor intake, rendering the Class 0 claim invalid.**
- **A compressor delivering air to Class 0 will still require purification equipment in both the compressor room and at the point of use for the Class 0 purity to be maintained at the application.**
- **Air for critical applications such as breathing, medical, food, etc typically only requires air quality to Class 2.2.1 or Class 2.1.1.**
- **Purification of air to meet a Class 0 specification is only cost effective if carried out at the point of use.**

www.comoso.com

www.comoso.com

www.comoso.com

Parker Worldwide

Europe, Middle East, Africa

AE – United Arab Emirates, Dubai
Tel: +971 4 8127100
parker.me@parker.com

AT – Austria, Wiener Neustadt
Tel: +43 (0)2622 23501-0
parker.austria@parker.com

AT – Eastern Europe, Wiener Neustadt
Tel: +43 (0)2622 23501 900
parker.easteurope@parker.com

AZ – Azerbaijan, Baku
Tel: +994 50 2233 458
parker.azerbaijan@parker.com

BE/LU – Belgium, Nivelles
Tel: +32 (0)67 280 900
parker.belgium@parker.com

BY – Belarus, Minsk
Tel: +375 17 209 9399
parker.belarus@parker.com

CH – Switzerland, Etoy
Tel: +41 (0)21 821 87 00
parker.switzerland@parker.com

CZ – Czech Republic, Klecany
Tel: +420 284 083 111
parker.czechrepublic@parker.com

DE – Germany, Kaarst
Tel: +49 (0)2131 4016 0
parker.germany@parker.com

DK – Denmark, Ballerup
Tel: +45 43 56 04 00
parker.denmark@parker.com

ES – Spain, Madrid
Tel: +34 902 330 001
parker.spain@parker.com

FI – Finland, Vantaa
Tel: +358 (0)20 753 2500
parker.finland@parker.com

FR – France, Contamine s/Arve
Tel: +33 (0)4 50 25 80 25
parker.france@parker.com

GR – Greece, Athens
Tel: +30 210 933 6450
parker.greece@parker.com

HU – Hungary, Budapest
Tel: +36 1 220 4155
parker.hungary@parker.com

IE – Ireland, Dublin
Tel: +353 (0)1 466 6370
parker.ireland@parker.com

IT – Italy, Corsico (MI)
Tel: +39 02 45 19 21
parker.italy@parker.com

KZ – Kazakhstan, Almaty
Tel: +7 7272 505 800
parker.easteurope@parker.com

NL – The Netherlands, Oldenzaal
Tel: +31 (0)541 585 000
parker.nl@parker.com

NO – Norway, Asker
Tel: +47 66 75 34 00
parker.norway@parker.com

PL – Poland, Warsaw
Tel: +48 (0)22 573 24 00
parker.poland@parker.com

PT – Portugal, Leca da Palmeira
Tel: +351 22 999 7360
parker.portugal@parker.com

RO – Romania, Bucharest
Tel: +40 21 252 1382
parker.romania@parker.com

RU – Russia, Moscow
Tel: +7 495 645-2156
parker.russia@parker.com

SE – Sweden, Spånga
Tel: +46 (0)8 59 79 50 00
parker.sweden@parker.com

SK – Slovakia, Banská Bystrica
Tel: +421 484 162 252
parker.slovakia@parker.com

SL – Slovenia, Novo Mesto
Tel: +386 7 337 6650
parker.slovenia@parker.com

TR – Turkey, Istanbul
Tel: +90 216 4997081
parker.turkey@parker.com

UA – Ukraine, Kiev
Tel +380 44 494 2731
parker.ukraine@parker.com

UK – United Kingdom, Warwick
Tel: +44 (0)1926 317 878
parker.uk@parker.com

ZA – South Africa, Kempton Park
Tel: +27 (0)11 961 0700
parker.southafrica@parker.com

North America

CA – Canada, Milton, Ontario
Tel: +1 905 693 3000

US – USA, Cleveland
Tel: +1 216 896 3000

Asia Pacific

AU – Australia, Castle Hill
Tel: +61 (0)2-9634 7777

CN – China, Shanghai
Tel: +86 21 2899 5000

HK – Hong Kong
Tel: +852 2428 8008

IN – India, Mumbai
Tel: +91 22 6513 7081-85

JP – Japan, Tokyo
Tel: +81 (0)3 6408 3901

KR – South Korea, Seoul
Tel: +82 2 559 0400

MY – Malaysia, Shah Alam
Tel: +60 3 7849 0800

NZ – New Zealand, Mt Wellington
Tel: +64 9 574 1744

SG – Singapore
Tel: +65 6887 6300

TH – Thailand, Bangkok
Tel: +662 186 7000-99

TW – Taiwan, Taipei
Tel: +886 2 2298 8987

South America

AR – Argentina, Buenos Aires
Tel: +54 3327 44 4129

BR – Brazil, Sao Jose dos Campos
Tel: +55 800 727 5374

CL – Chile, Santiago
Tel: +56 2 623 1216

MX – Mexico, Apodaca
Tel: +52 81 8156 6000

European Product Information Centre
Free phone: 00 800 27 27 5374
(from AT, BE, CH, CZ, DE, DK, EE, ES, FI, FR, IE, IL, IS, IT, LU, MT, NL, NO, PL, PT, RU, SE, SK, UK, ZA)

© 2014 Parker Hannifin Corporation. All rights reserved.

Catalogue PDE2660TCUK - V6 - September 2014

Parker Hannifin Ltd.
Tachbrook Park Drive
Tachbrook Park,
Warwick, CV34 6TU
United Kingdom
Tel.: +44 (0) 1926 317 878
Fax: +44 (0) 1926 317 855
parker.uk@parker.com
www.parker.com

www.comoso.com