P1D

Insert item part number prior to installation
Inscrire la référence de l'appareil avant installation
Vor Einbau Bestell Nr. eintragen

Inserire il codice prima dell'installazione
Rellenar referencia antes del montaje
Fyll i artikelnummer före installationen

9127007796 May 2006

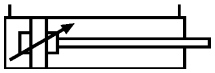

P(e)max = 1 MPa (10 bar)
Standard temp: t = -20 °C +80 °C
High temp: t = -10 °C +150 °C
Low temp: t = -40 °C +40 °C

Summary / Table des matières / Inhaltsverzeichnis / Indice / Índice / Innehåll

Disconect air and electrical supplies before attempting repair or maintenance.
See ISO 4414-1982 for safety requirements covering the installation and use of pneumatic equipment.

Débrancher les connexions pneumatiques et électriques avant réparation ou maintenance.
Voir ISO 4414-1982 pour les règles de sécurité des installations et utilisation des équipements pneumatiques.

Vor Reparatur- oder Wartungsarbeiten sind alle pneumatischen und elektrischen Versorgungsleitungen von der Pneumatikkomponente zu trennen.
Siehe ISO 4414-1982 bzw. DIN 24 558 bezüglich den Sicherheitsvorschriften für Installation und Einsatz von Pneumatikkomponenten.

Prima di effettuare interventi di manutenzione verificare che sia l'alimentazione elettrica che quella pneumatica siano disattivate.
Attenersi alla nomativa ISO 4414-1982 che regola l'installazione e l'uso di componenti pneumatici.

Desconectar las conexiones neumáticas y eléctricas antes de efectuar cualquier reparación o mantenimiento.
Ver ISO 4414-1982 para reglas de seguridad de las instálaciones y utilización de equipos neumaticós.

Koppla ifrån luft och elektriska anslutningar innan reparations- och underhållsarbeten påbörjas.
Se ISO 4414-1982 för säkerhetsbestämmelser täckande installation och användning av pneumatisk utrustning.

UK

Safety instructions for the P1D-S cylinder with accessories

Supplementary safety instructions for P1D-S cylinders installed in Ex-areas

Serious, even fatal, damage or injury may be caused by the hot moving parts of the P1D cylinders in the presence of explosive gas mixtures and concentrations of dust.

All installation, connection, commissioning, servicing and repair work on P1D cylinders must be carried out by qualified personnel taking account of the following

- These instructions
- Markings on the cylinder
- All other planning documents, commissioning instructions and connection diagrams associated with the application.
- Provisions and requirements specific to the application
- National/international regulations (explosion protection, safety and accident prevention)

Real life applications

P1D cylinders are designed to provide linear movement in industrial applications, and should only be used in accordance with the instructions in the technical specifications in the catalogue, and within the operating range indicated on the rating plate. The cylinders meet the applicable standards and requirements of directive 94/9/EC (ATEX)

The cylinders must not be used underground in mines susceptible to firedamp and/or flammable dusts. The cylinders are intended for use in areas in which explosive atmospheres caused by gases, vapours or mists of flammable liquids, or air/dust mixtures may be expected to occur during normal use (infrequently)

Checklist

Before using the cylinders in an Ex-area, you should check the following:

Do the specifications of the P1D-S cylinder match the Ex-classification of the area of use in accordance with directive 94/9/EC (previously ATEX 100a)

- Equipment group
- Ex-equipment category
- Ex-zone
- Temperature class
- Max. surface temperature

1. When installing the P1D-S cylinder, is it certain that there is no potentially explosive atmosphere, oil, acids, gases, vapours or radiation?
2. Is the ambient temperature as specified in the technical data in the catalogue at all times?
3. Is it certain that the P1D-S cylinder is adequately ventilated and that no forbidden additional heat is added?
4. Are all the driven mechanical components ATEX certified?
5. Check that the P1D-S cylinder is safely earthed.
6. Check that the P1D-S cylinder is supplied with compressed air. Explosive gas mixtures must not be used for driving the cylinder.
7. Check that the P1D-S cylinder is not equipped with a metal scraper ring (special version).

Installation requirements in Ex-areas

- The temperature of the supply air must not exceed the ambient temperature.
- The P1D-S cylinder may be installed in any position.
- An air treatment unit must be attached to the inlet of the P1D-S cylinder.
- The P1D-S cylinder must be connected to earth at all times, through its support, a metallic tube or separate conductor.
- The outlet of the P1D-S cylinder must not be open within an Ex-area, but must be connected to the silencer or, preferably, piped and released outside the Ex-area.
- The P1D-S cylinder may only drive units that are ATEX certified.
- Ensure that the P1D-S cylinder is not exposed to forces greater than those permitted in accordance with the catalogue
- The P1D-S cylinder must be supplied with compressed air. Explosive gas mixtures must not be used
- P1D-S cylinders with metal scraper rings must not be used in Ex-areas

Inspecting cylinders during operation

The P1D cylinder must be kept clean on the outside, and a layer of dust/dirt thicker than 1 mm must never be allowed to form.
Strong solvents should not be used for cleaning, because they can cause the seal (material PUR) around the piston rod to swell, potentially increasing the temperature. Inspect and verify that the cylinder, with attachments, compressed air fittings, hoses, tubes, etc. meet the standards of "safe" installation.

Marking of cylinder P1D-S Standard (P1D-S***MS-****)

CE Ex II 2GD c T4 120 °C

CE	Communauté Européenne = EU CE on the product shows that Parker Hannifin products meet one or more EU directives
Ex	Ex means that this product is intended for use in potentially explosive atmospheres
II	Stands for the equipment group (I = mines and II = other hazardous areas)
2GD	Stands for equipment category 2G means the equipment can be used in zones 1 and 2 where there is a risk involving gases, vapours or mists of combustible liquids and 2D in zones 21 and 22 where there is a risk involving dusts. 2GD Means the equipment can be used in zones 1, 2, 21 and 22.
c	Safe design (prEN 13463-5)
T4	If equipment is in temperature class T4, the maximum surface temperature must not exceed 135 °C. (To guarantee this, the product has been tested to ensure that the maximum is 130 °C. This provides a safety margin of 5 °K.)
120 °C	Maximum permitted surface temperature on P1D-S cylinder in atmospheres containing potentially explosive dusts.

UK

Supplementary safety instructions for P8S- GPFLX/ EX sensors installed in Ex-areas

Serious, even fatal, damage or injury may be caused by the hot moving parts of the P1D cylinders in the presence of explosive gas mixtures and concentrations of dust.

Instructions for use
Safety instructions

- Cylinder sensor ATEX classed for category II3G and II3D
- Ambient temperature Ta = -20 °C to +45 °C
- Temperature class T4, or max. surface temperature of T = 135 °C
- Protection class IP67
- Read installation instructions before startup
- Installation, connection and commissioning must be carried out by trained personnel

Applications

- This sensor is designed for use in the T-groove of cylinders, and detects the magnetic field in potentially explosive areas. The sensor can only be installed in the T-groove of these cylinders.
- The sensor may also be installed on round cylinders by means of the following attachments:

  P8S-TMC01 Suitable for P1S and P1A diameter 10 - 25 mm

  P8S-TMC02 Suitable for P1S diameter 32 - 63 mm

  P8S-TMC03 Suitable for P1S diameter 80 - 125 mm

The following data applies to these attachments:

- Ambient temperature Ta = 0 °C to 45 °C
- Low energy absorption to EN 50 021

- The sensor may also be installed on tie-rod cylinders or profile cylinders by means of this attachment:

  P8S-TMA0X Suitable for P1D-T diameter 32 - 125 mm, P1E-T diameter 160 – 200 mm and C41 diameter 160 – 200 mm

Installation

General: The sensor must be protected from UV radiation. The cable must be installed such that it is protected from external influences, for example it may be necessary to attach an external strain relief to the cable.

Technical data for sensor

Operating voltage Ub = 18 to 30 V DC
Max. load current Ia d" ¡Ü 70 mA
Ambient temperature: -20 °C to 45 °C

Commissioning

When connecting the sensor to a power source, please pay attention to the following
a) the load data (operating voltage, continuous load current)
b) the wiring diagram for the sensor

Maintenance

Our P8S-GPFLX/EX cylinder sensor is maintenance free, but the cable connections should be checked at regular intervals.
The sensor must be protected from UV radiation. The sensor must be kept clean on the outside, and a layer of dirt thicker than 1 mm must never be allowed to form. Strong solvents should not be used for cleaning as they may damage the sensor.

P8S-GPFLX/EX cylinder sensor

CE Ex II3G EEx nA II T4X II3D 135 °C IP67

CE Communatuté Européenne = EU
CE on the product shows that Parker Hannifin products meet one or more EU directives

Ex means that this product is intended for use in potentially explosive atmospheres

II	Stands for the equipment group (I = mines and II = other hazardous areas)
3G	Stands for the equipment category 3G means the equipment can be used in zone 2 where there is a risk involving gases, vapours or mists of combustible liquids
EEx	EEx means that this is an electrical product intended for use in Ex-areas
nA II	n Not ignitable to EN50021, A Explosion group tested with acetone, ethanol, toluene and xylene; II Not for use in the mining industry
T4 X	If equipment is in temperature class T4, the maximum surface temperature must not exceed 135 °C. (To guarantee this, the product has been tested to ensure that the maximum is 130 °C. This provides a safety margin of 5 °K.) X Must be installed in accordance with the installation manual
3D	Stands for equipment category 3D in zone 22 where there is a risk involving dusts.
135 °C	Maximum permitted surface temperature on the motor in atmospheres containing potentially explosive dusts.
IP67	Satisfies protection class IP67

Components such as cylinder attachments, tube fittings, tubes, etc.

Components

Parker Hannifin guarantees that our cylinder attachments, tube fittings, tubes, etc. are not subject to the provisions of the ATEX directive.

A component means any item essential to the safe functioning of equipment and protective systems but with no autonomous function.

Components intended for incorporation into equipment or protective systems which are accompanied by an attestation of conformity with the ATEX directive, including a statement of their characteristics and how they must be incorporated into products, are considered to conform to the applicable provisions of directive 94/9/EC. Ex-components as defined in the European standard EN 50014 are components in the sense of the ATEX directive 94/9/EC as well. Components must not have the CE marking affixed unless otherwise required by other directives.

Examples of components:

- terminals
- push buttons assemblies
- relays
- empty flameproof enclosures
- ballasts for fluorescent lamps
- meters (e.g. moving coil)
- encapsulated relays and contactors, with terminals and/or flying leads

EC Declaration of conformity

We,
Parker Hannifin AB
Pneumatic Division
P.O. Box 110
S-523 23 Ulricehamn
Sweden

Hereby declare that the VDMA cylinder P1D-S Standard* range is compatible for use in explosive atmosphere **Ex II 2 GD c T4 T120 °C.**

All models from range, Pneumatic cylinder ISO/VDMA P1D-S*, bore 32 - 125 mm
P1D-S032MS-XXXX
P1D-S040MS-XXXX
P1D-S050MS-XXXX
P1D-S063MS-XXXX
P1D-S080MS-XXXX
P1D-S100MS-XXXX
P1D-S0125MS-XXXX
XXXX = All strokes
* Whithout metal scraper ring

P1D-S are designed for utilization in applications falling under the scope of the ATEX directive 94/9/EC. These products are designed and manufactured in compleance with the following elements:

EN 13463-1:2001; Non-electrical equipment for potentially explocive atmospheres – Part 1: Basic method and requirements.

EN 13463-5: 2002; Non-electrical equipment intended for use in potially explosive atmospheres – Part 5: Protection by constructional safety.

EN 983: Safety of machinery – Safety of requirements for fluid power systems and their components – Pneumatics.

The P1D cmplies with the current ISO 69431, ISO15552, VDMA 24562 and AFNOR installation dimension standard.

Parker Hannifin AB has been certified under the ISO9001 QA standard since 1994.

Additional information:
This coverage could only be referred to as long as operations needed for final-assembling and starting up of theses products comply with standards ralating to the above mentioned directive. Each time this this will be required for compliance purpose, the user will have to apply for a complete coverage of the final assembled system according to the above mentioned directives and relating standards.

Sweden Issued at Ulricehamn December 22, 2004

Inge Melkersson
Head of Design Department

CAD drawings on the Internet

Our home page www.parker.com/euro_pneumatic includes the AirCad Drawing Library with 2D and 3D drawings for the main versions.

AirCad™ Drawing Library

P1D Standard

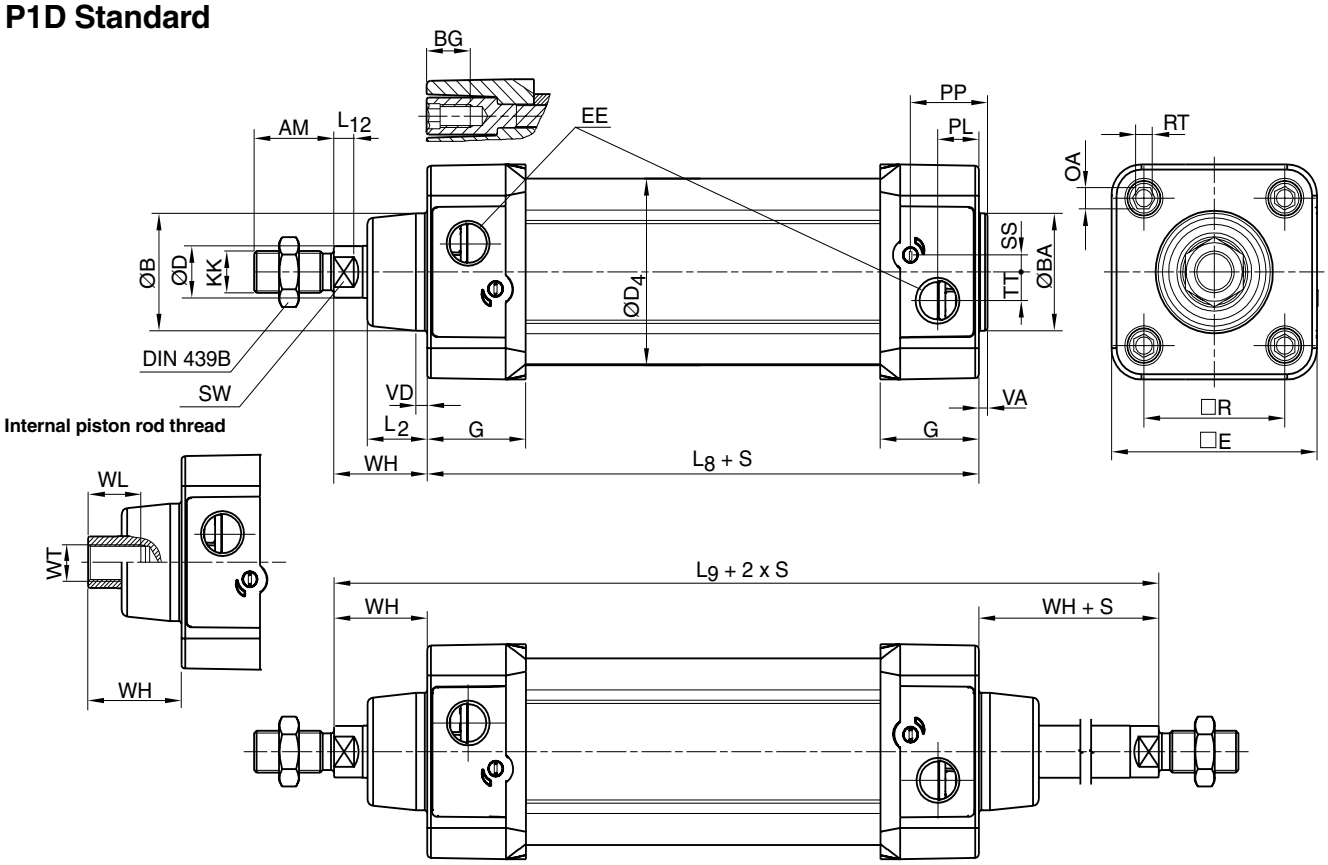

Dimensions

Cylinder bore mm	AM mm	B mm	BA mm	BG mm	D mm	D4 mm	E mm	EE mm	G mm	KK	L2 mm	L8 mm	L9 mm	L12 mm
32	22	30	30	16	12	45,0	50,0	G1/8	28,5	M10x1,25	16,0	94	146	6,0
40	24	35	35	16	16	52,0	57,4	G1/4	33,0	M12x1,25	19,0	105	165	6,5
50	32	40	40	16	20	60,7	69,4	G1/4	33,5	M16x1,5	24,0	106	180	8,0
63	32	45	45	16	20	71,5	82,4	G3/8	39,5	M16x1,5	24,0	121	195	8,0
80	40	45	45	17	25	86,7	99,4	G3/8	39,5	M20x1,5	30,0	128	220	10,0
100	40	55	55	17	25	106,7	116,0	G1/2	44,5	M20x1,5	32,4	138	240	14,0
125	54	60	60	20	32	134,0	139,0	G1/2	51,0	M27x2	45,0	160	290	18,0

Cylinder bore mm	OA mm	PL mm	PP mm	R mm	RT	SS mm	SW mm	TT mm	VA mm	VD mm	WH mm	WL mm	WT
32	6,0	13,0	21,8	32,5	M6	4,0	10	4,5	3,5	4,5	26	21	M8x1
40	6,0	14,0	21,9	38,0	M6	8,0	13	5,5	3,5	4,5	30	23	M10x1,25
50	8,0	14,0	23,0	46,5	M8	4,0	17	7,5	3,5	5,0	37	31	M14x1,5
63	8,0	16,4	27,4	56,5	M8	6,5	17	11,0	3,5	5,0	37	31	M14x1,5
80	6,0	16,0	30,5	72,0	M10	0	22	15,0	3,5	4,0	46	39	M18x1,5
100	6,0	18,0	35,8	89,0	M10	0	22	20,0	3,5	4,0	51	39	M18x1,5
125	8,0	28,0	40,5	110,0	M12	0	27	17,5	5,5	6,0	65	53	M24x2

S=Stroke

Tolerances

Cylinder bore mm	B	BA	L_8 mm	L_9 mm	R mm	Stroke tolerance up to stroke 500 mm	Stroke tolerance for stroke over 500 mm
32	d11	d11	±0,4	±2	±0,5	+0,3/+2,0	+0,3/+3,0
40	d11	d11	±0,7	±2	±0,5	+0,3/+2,0	+0,3/+3,0
50	d11	d11	±0,7	±2	±0,6	+0,3/+2,0	+0,3/+3,0
63	d11	d11	±0,8	±2	±0,7	+0,3/+2,0	+0,3/+3,0
80	d11	d11	±0,8	±3	±0,7	+0,3/+2,0	+0,3/+3,0
100	d11	d11	±1,0	±3	±0,7	+0,3/+2,0	+0,3/+3,0
125	d11	d11	±1,0	±3	±1,1	+0,3/+2,0	+0,3/+3,0

CAD drawings on the Internet

Our home page www.parker.com/euro_pneumatic includes the AirCad Drawing Library with 2D and 3D drawings for the main versions.

AirCad™ Drawing Library

P1D Clean

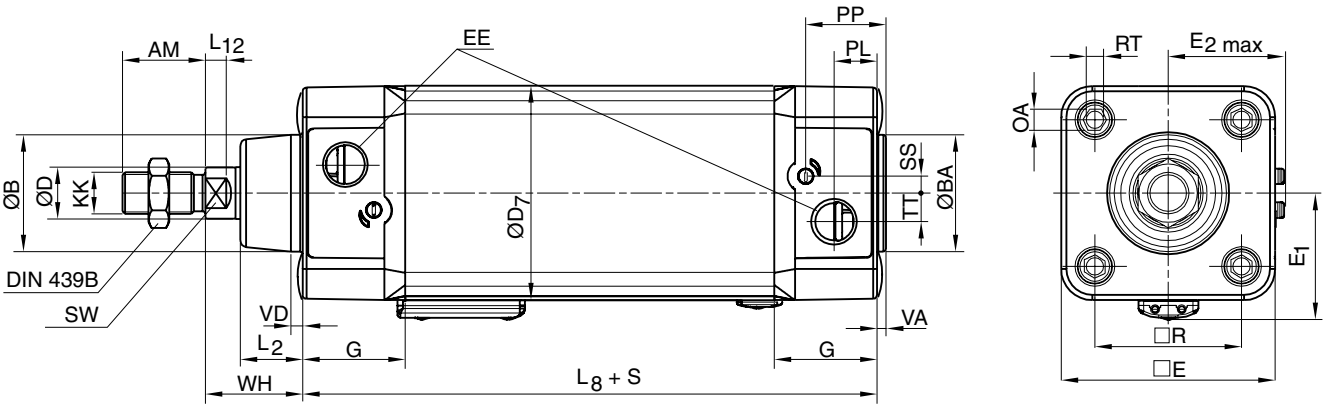

P1D Tie-Rod

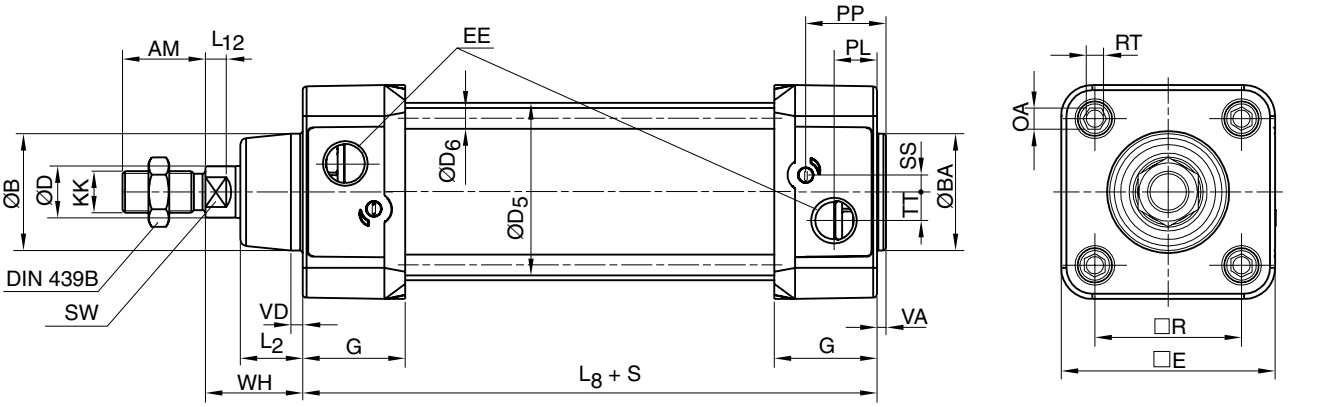

P1D Flexible Porting

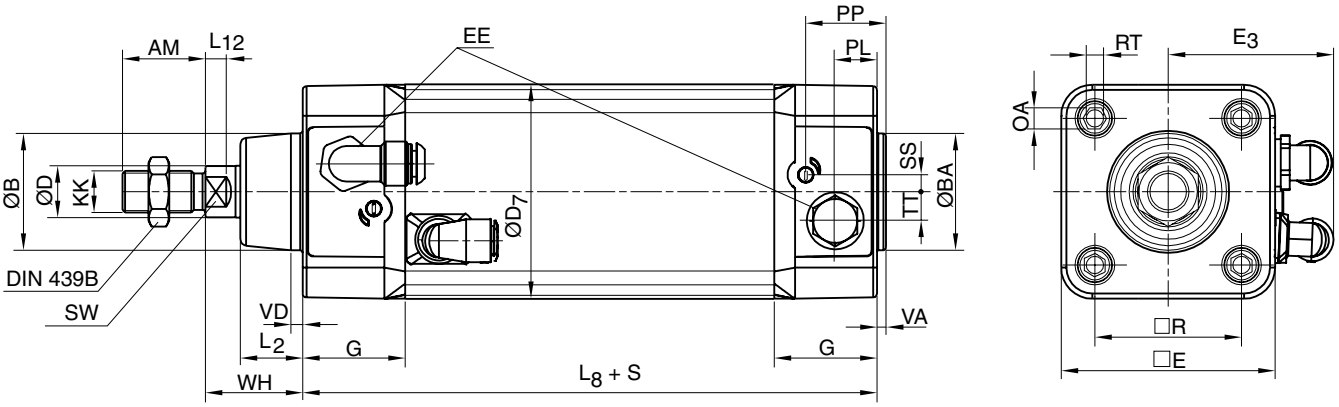

Dimensions

Cylinder bore						Elbow fittings, tubing Ømm				Straight fittings, tubing Ømm			
						4	6	8	10	4	6	8	10
	D5	D6	D7	E1	E2max	E3	E3	E3	E3	E3	E3	E3	E3
mm	mm	mm	mm	mm	mm	mm	mm	mm	mm	mm	mm	mm	mm
32	36	5,3	49,6	32	30,0	42	44	-	-	38	40	-	-
40	44	5,3	57,3	36	34,7	46	48	-	-	42	44	-	-
50	55	7,1	69,3	42	40,7	-	-	56	76	-	-	48	50
63	68	7,1	82,3	49	46,2	-	-	64	83	-	-	55	75
80	86	8,9	99,3	57	54,7	-	-	-	-	-	-	-	-
100	106	8,9	117,6	68	64,0	-	-	-	-	-	-	-	-
125	132	10,8	142,8	81	75,5	-	-	-	-	-	-	-	-

Other dimensions, see opposite page

P1D Flexible Porting Ø80 - Ø125 can be ordered with threaded ports only or with factory-fitted elbow or straight push-in fittings (see position 20 in the order code key page 32)

CAD drawings on the Internet

Our home page www.parker.com/euro_pneumatic includes the AirCad Drawing Library with 2D and 3D drawings for the main versions.

AirCad™ Drawing Library

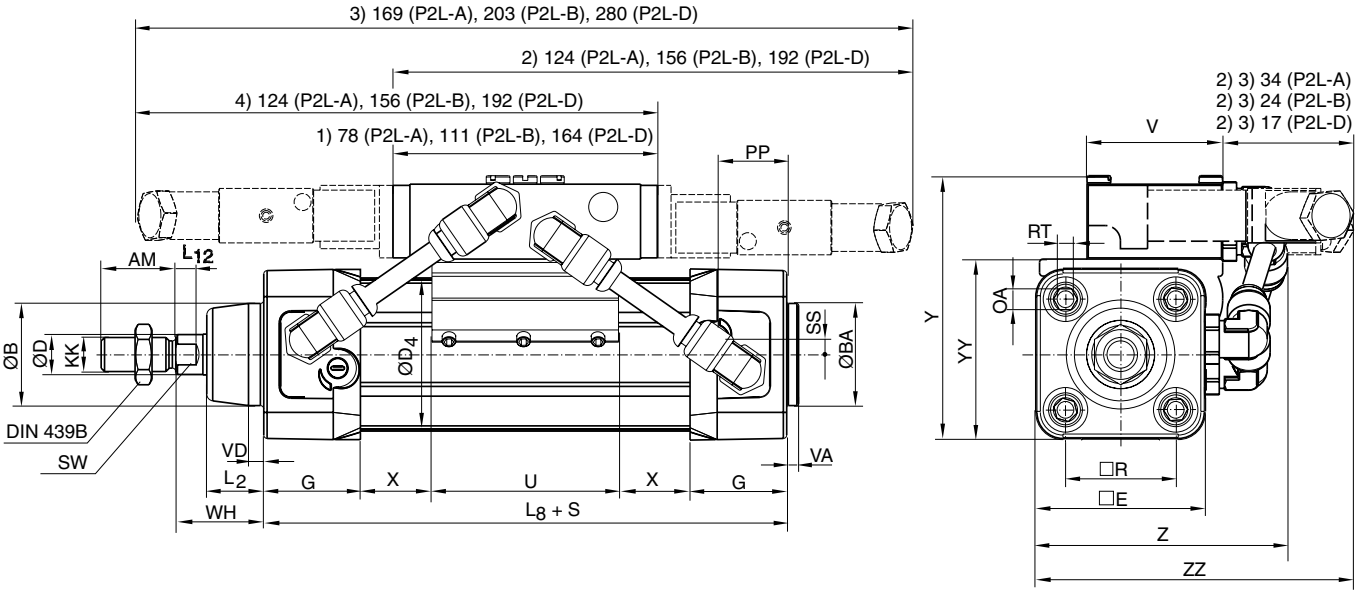

Dimensions

Cylinder bore mm	AM mm	B mm	BA mm	BG mm	D mm	D4 mm	E mm	G mm	KK	L2 mm	L8 mm	L12 mm	OA mm
32	22	30	30	16	12	45,0	50,0	28,5	M10x1,25	16,0	94	6,0	6,0
40	24	35	35	16	16	52,0	57,4	33,0	M12x1,25	19,0	105	6,5	6,0
50	32	40	40	16	20	60,7	69,4	33,5	M16x1,5	24,0	106	8,0	8,0
63	32	45	45	16	20	71,5	82,4	39,5	M16x1,5	24,0	121	8,0	8,0
80	40	45	45	17	25	86,7	99,4	39,5	M20x1,5	30,0	128	10,0	6,0
100	40	55	55	17	25	106,7	116,0	44,5	M20x1,5	32,4	138	14,0	6,0
125	54	60	60	20	32	134,0	139,0	51,0	M27x2	45,0	160	18,0	8,0

Cylinder bore mm	PP mm	R mm	RT	SS mm	SW mm	VA mm	VD mm	WH mm	U mm	V mm	X mm
32	21,8	32,5	M6	4,0	10	3,5	4,5	26	55	40	-9+S/2
40	21,9	38,0	M6	8,0	13	3,5	4,5	30	55	40	-8+S/2
50	23,0	46,5	M8	4,0	17	3,5	5,0	37	55	40	-8+S/2
63	27,4	56,5	M8	6,5	17	3,5	5,0	37	55	40	-6,5+S/2
80	30,5	72,0	M10	0	22	3,5	4,0	46	55	54	-2,5+S/2
100	35,8	89,0	M10	0	22	3,5	4,0	51	55	54	-2,5+S/2
125	40,5	110,0	M12	0	27	5,5	6,0	65	55	65	2+S/2

Cylinder bore mm	Y mm	YY mm	Z mm	ZZ mm
32	80	56	80	90
40	88	64	87	96
50	102	78	96	105
63	109	85	107	116
80	136	102	132	125
100	151	117	148	140
125	185	146	183	159

S=Stroke
1) Air actuated 5/2 and 5/3
2) Electrically actuated 5/2 with spring return
3) Electrically actuated 5/2 and 5/3 (2 solenoid valves)
4) Electrically actuated 5/2 with spring return(reverse function)

CAD drawings on the Internet

Our home page www.parker.com/euro_pneumatic includes the AirCad Drawing Library with 2D and 3D drawings for the main versions.

AirCad™ Drawing Library

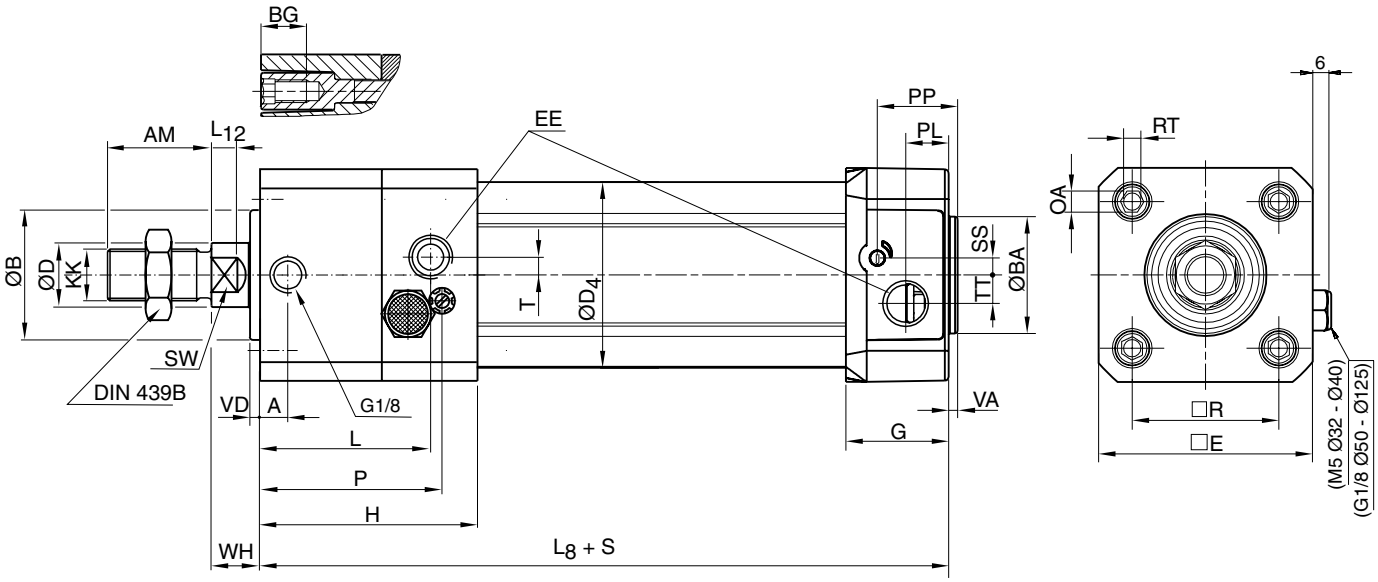

Dimensions

Cylinder bore mm	A mm	AM mm	B mm	BA mm	BG mm	D mm	D4 mm	E mm	EE mm	G mm	H mm	KK mm	L mm	L2 mm
32	18,5	22	30	30	16	12	45,0	50,0	G1/8	28,5	71,0	M10x1,25	53,0	16,0
40	20,0	24	35	35	16	16	52,0	57,4	G1/4	33,0	76,5	M12x1,25	56,0	19,0
50	21,0	32	40	40	16	20	60,7	69,4	G1/4	33,5	80,0	M16x1,5	65,0	24,0
63	30,0	32	45	45	16	20	71,5	82,4	G3/8	39,5	96,0	M16x1,5	76,5	24,0
80	35,0	40	45	45	17	25	86,7	99,4	G3/8	39,5	110,0	M20x1,5	89,0	30,0
100	54,0	40	55	55	17	25	106,7	116,0	G1/2	44,5	132,0	M20x1,5	112,0	32,4
125	65,5	54	60	60	20	32	134,0	139,0	G1/2	51,0	144,5	M27x2	124,5	45,0

Cylinder bore mm	L8 mm	L12 mm	OA mm	P mm	PL mm	PP mm	R mm	RT	SS mm	SW mm	T mm	TT mm	VA mm	VD mm	WH mm
32	137	6,0	6,0	63,0	13,0	21,8	32,5	M6	4,0	10	4,5	4,5	3,5	4,5	15
40	149	6,5	6,0	67,5	14,0	21,9	38,0	M6	8,0	13	3,0	5,5	3,5	4,5	16
50	153	8,0	8,0	71,0	14,0	23,0	46,5	M8	4,0	17	5,5	7,5	3,5	5,0	17
63	178	8,0	8,0	87,0	16,4	27,4	56,5	M8	6,5	17	3,0	11,0	3,5	5,0	17
80	199	10,0	6,0	101,0	16,0	30,5	72,0	M10	0	22	6,0	15,0	3,5	4,0	20
100	226	14,0	6,0	122,0	18,0	35,8	89,0	M10	0	22	6,0	20,0	3,5	4,0	20
125	254	18,0	8,0	134,5	28,0	40,5	110,0	M12	0	27	6,0	17,5	5,5	6,0	27

S=Stroke

Tolerances

Cylinder bore mm	B	BA mm	L_8 mm	L_9 mm	R mm	Stroke tolerance up to stroke 500 mm	Stroke tolerance for stroke over 500 mm
32	d11	d11	±0,4	±2	±0,5	+0,3/+2,0	+0,3/+3,0
40	d11	d11	±0,7	±2	±0,5	+0,3/+2,0	+0,3/+3,0
50	d11	d11	±0,7	±2	±0,6	+0,3/+2,0	+0,3/+3,0
63	d11	d11	±0,8	±2	±0,7	+0,3/+2,0	+0,3/+3,0
80	d11	d11	±0,8	±3	±0,7	+0,3/+2,0	+0,3/+3,0
100	d11	d11	±1,0	±3	±0,7	+0,3/+2,0	+0,3/+3,0
125	d11	d11	±1,0	±3	±1,1	+0,3/+2,0	+0,3/+3,0

Electronic sensors

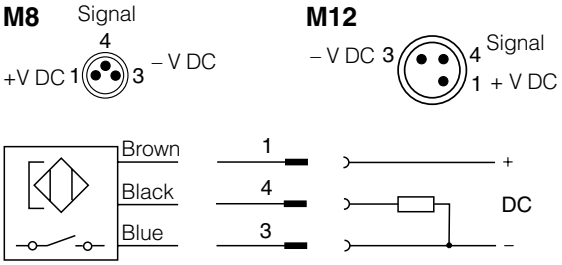

Reed sensors

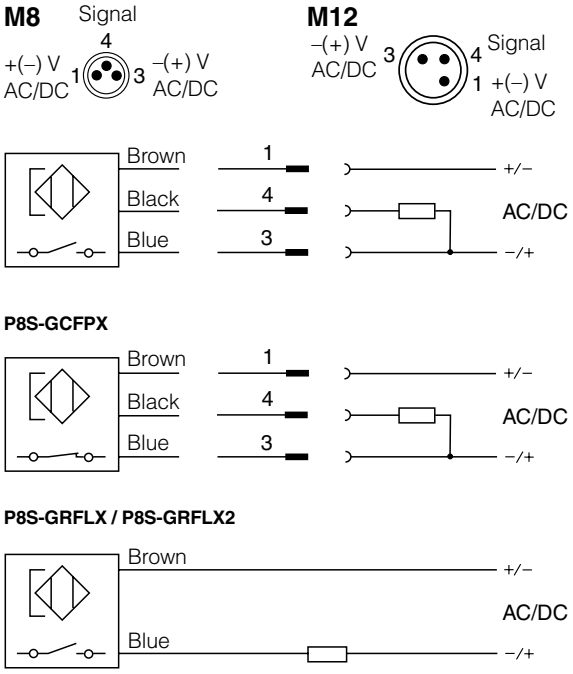

Dimensions

Sensors

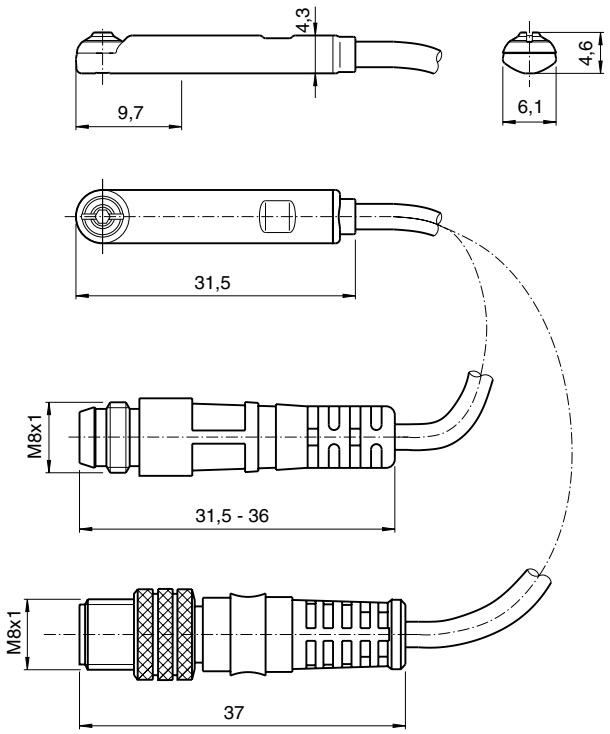

Adapter for P1D-T

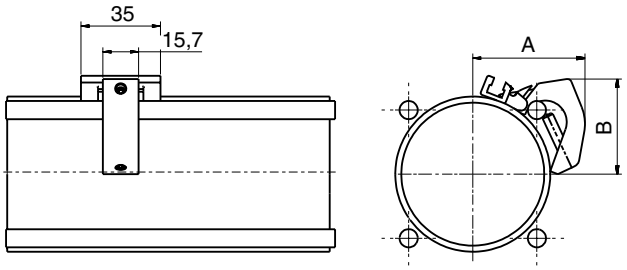

Cyl. bore mm	A mm	B mm
32	35	26
40	39	30
50	44	30
63	50	42
80	54	52
100	62	60
125	74	69

P1D Seal kits

Complete seal kits consisting of:
Piston seals
Cushioning seals
Piston rod bearing
Combined piston rod seal and scraper ring
O-rings

Material specification, see page19

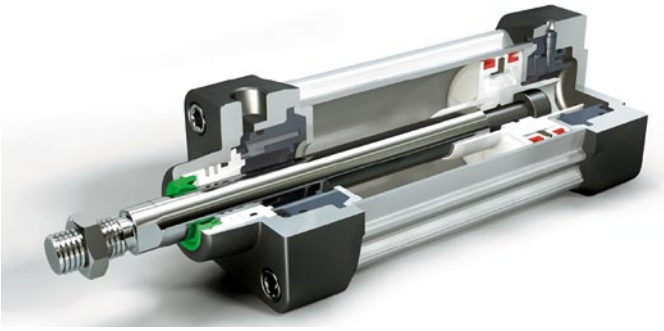

Order codes

Cyl.bore mm	P1D cylinder version			
	Standard P1D-S, P1D-T, P1D-C, P1D-F	High Temp P1D-S	Low Temp P1D-S	Hydraulic P1D-S
32	**P1D-6KRN**	**P1D-6KRF**	**P1D-6KRL**	**P1D-6KRH**
40	**P1D-6LRN**	**P1D-6LRF**	**P1D-6LRL**	**P1D-6LRH**
50	**P1D-6MRN**	**P1D-6MRF**	**P1D-6MRL**	**P1D-6MRH**
63	**P1D-6NRN**	**P1D-6NRF**	**P1D-6NRL**	**P1D-6NRH**
80	**P1D-6PRN**	**P1D-6PRF**	**P1D-6PRL**	**P1D-6PRH**
100	**P1D-6QRN**	**P1D-6QRF**	**P1D-6QRL**	**P1D-6QRH**
125	**P1D-6RRN**	**P1D-6RRF**	**P1D-6RRL**	**P1D-6RRH**

Cyl.bore mm	P1D cylinder version			
	Standard temperature with FPM scraper ring P1D-S, P1D-T, P1D-C, P1D-F	**Standard temperature Dry piston rod with HDPE scraper ring** P1D-S, P1D-T, P1D-C, P1D-F	**Standard temperature with metal scraper ring** P1D-S, P1D-T, P1D-C, P1D-F	**Standard temperature with piston rod locking** P1D-L, P1D-D, P1D-4
32	**P1D-6KRV**	**P1D-6KRD**	**P1D-6KRQ**	**P1D-6KRNL**
40	**P1D-6LRV**	**P1D-6LRD**	**P1D-6LRQ**	**P1D-6LRNL**
50	**P1D-6MRV**	**P1D-6MRD**	**P1D-6MRQ**	**P1D-6MRNL**
63	**P1D-6NRV**	**P1D-6NRD**	**P1D-6NRQ**	**P1D-6NRNL**
80	**P1D-6PRV**	**P1D-6PRD**	**P1D-6PRQ**	**P1D-6PRNL**
100	**P1D-6QRV**	**P1D-6QRD**	**P1D-6QRQ**	**P1D-6QRNL**
125	**P1D-6RRV**	**P1D-6RRD**	**P1D-6RRQ**	**P1D-6RRNL**

Cyl.bore mm	P1D optional cylinder versions
	Through rod Standard temperature P1D-S, P1D-T, P1D-C, P1D-F
32	**P1D-6KRNF**
40	**P1D-6LRNF**
50	**P1D-6MRNF**
63	**P1D-6NRNF**
80	**P1D-6PRNF**
100	**P1D-6QRNF**
125	**P1D-6RRNF**

For other design variants with through rods, order double seal kits as above.
Example: For a P1D-S Ø63 with through rod, high temperature version, order 2 x P1D-6NRF

Grease for P1D

Standard	30g	**9127394541**
High temperature	30g	**9127394521**
Low temperature	30g	**9127394541**

Seal kit

= Included in seal kit

= Screwdriver head

= Insexgrepp

= Tightening torque

= Lubricated with grease, see page 74.

= Locking fluid

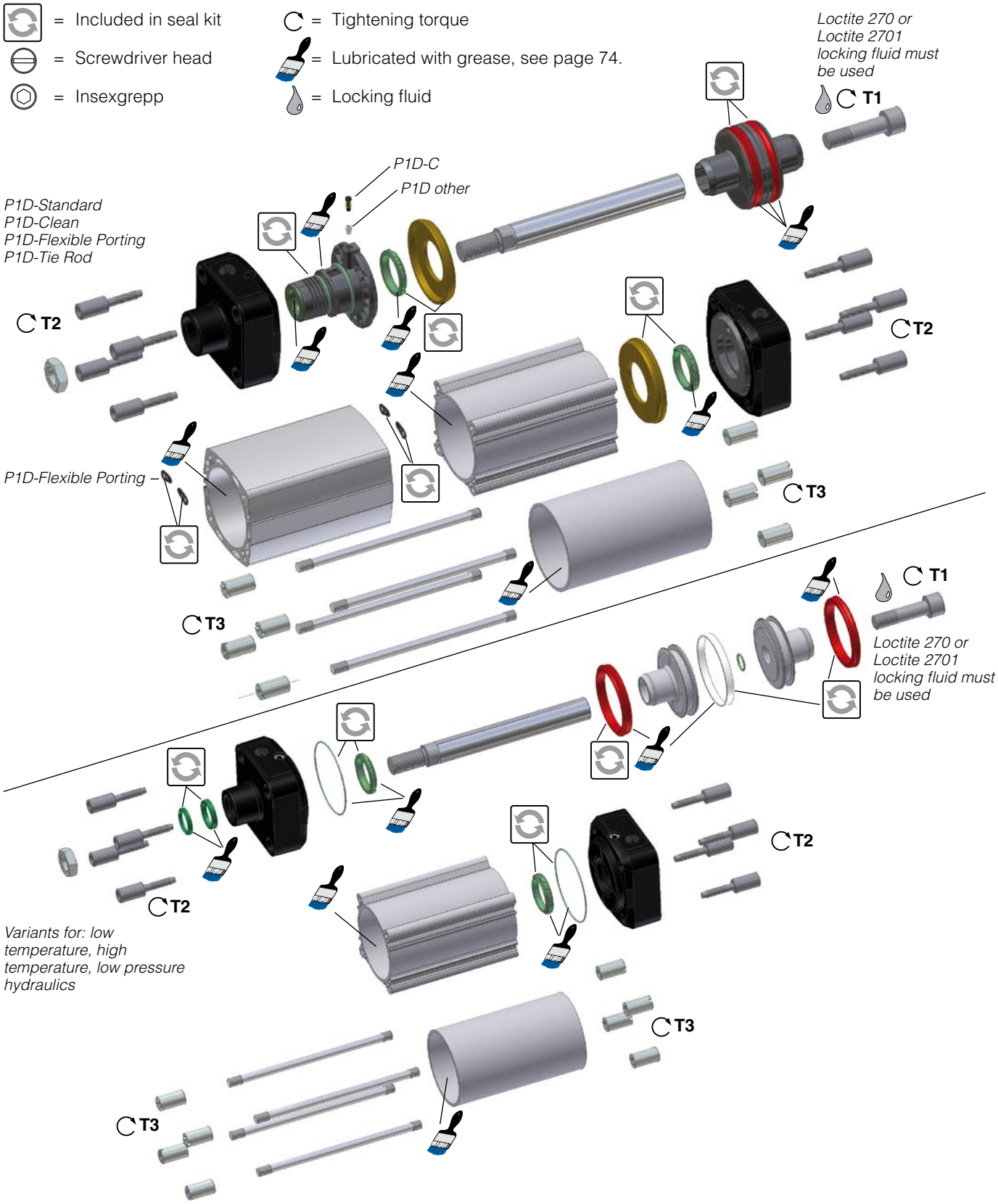

Cyl.-dia mm	Plastic piston T1 Nm	Alu. piston T1 Nm	NV mm	T2 Nm	NV mm	T3 Nm	NV mm	NV mm
32	4,5	15	6	8	6	6	6	
40	11	30	8	8	6	6	6	
50	20	40	10	20	8	11	8	
63	20	40	10	20	8	11	8	
80	40	120	14	20	6	20		3x16
100	120	120	14	20	6	20		3x16
125	120	120	14	70	8	40		4x18

Order key, spare parts

1	2	3	4	5	6	7	8	9	10	11	12	13	14	15
P	1	D	–	8	0	3	2	D	G	–	0	1	0	0

8	Spare parts

Cylinder dia. mm
032
040
050
063
080
100
125

Piston rod	
D	Double-acting
F	Piston rod locking, only chromium-plated rod
H	Through rod
L	Through rod + piston rod locking
Cylinder barrel*	
A	Profile cylinder
B	Cylindrical (for tie rod)
Tie rods	
T	Tie rods (order 4 for a cylinder)

* Cylinder barrel for P1D Clean and P1D Flexport cannot be ordered with this order key. Contact customer service

Piston rod	
G	Stainless steel
H	Hard-chromium plated
J	Acid-resistant steel
K	Chromium plated stainless
Cylinder barrel*	
A	Aluminium
Tie rods	
V	Stainless steel (order 4 for a cylinder)

Stroke** (mm) e.g. 0100 = 100 mm
Any stroke up to max. 2800 mm.

** When ordering piston rods for cylinders with extended piston rod, add together the stroke and the extension in the order key.
For example, a cylinder with stroke 100 mm and a piston rod extension of 25 mm is ordered with 0125 in the order number.

P1D with profile cylinder

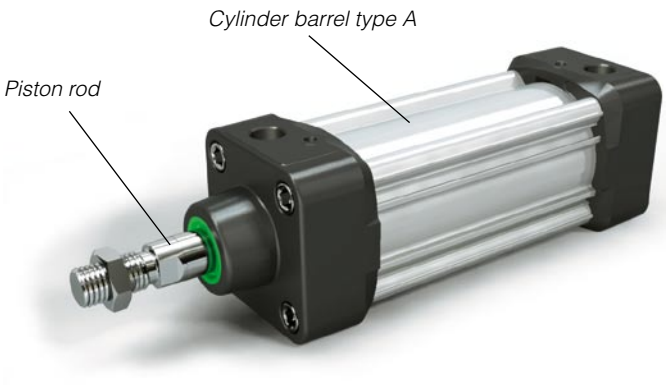

P1D with tie rods

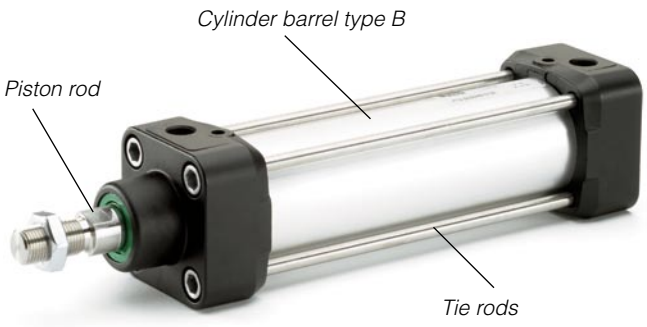

Prelubricated, further lubrication is not normally necessary.
If additional lubrication is introduced it must be continued.
The following oils are recommended.

Pré-lubrifié, une lubrification ultérieure n'est pas nécessaire.
Si une lubrification additionnelle est effectuée, elle doit
obligatoirement être renouvelée périodiquement.
Les huiles suivantes sont recommandées.

Vorgefettet. Geeignet für den Betrieb mit ungeölter Druckluft.
Nach Betrieb mit geölter Druckluft müssen Zylinder weiterhin mit
geölter Luft betrieben werden. Folgenden Ölsorten werden empfohlen.

Prelubrificato, non necessita di ulteriore lubrificazione. Nel caso di lubrificazione
aggiuntiva, questa dovra essere continua.
Sono raccomandati i seguenti lubrificanti.

Lubricado de fábrica. No necesita lubricación.
Si se lubrica, es necesario seguir haciéndolo
Se recomiendan los siguientes aceites.

Initialsmord, behöver normalt inte tillsatssmörjas.
Påbörjad tillsatssmörjning måste dock fortsätta.
Följande oljor rekommenderas.

Oil company	Designation	Grade
Century Oils	P.W.L.A	32
Alexander Duckham	Zurcon 4	32
Gulf	Harmony 43AW	32
Shell (UK) Oil	Tellus 37	37
Burmah Castrol	Hyspin AWS32	32
Edgar Vaughan	Hydrodrive HP100	32
Esso Petroleum	NUTO H32	32
BP	HLP 32	32
Mobile Oil Company	DTE Oil - Light	32
Mobile	VPI-A	32
Silkolene	Derwent 32	32

www.parker.com

Pneumatic Division Sales Offices

Austria - Wr.Neustadt
Tel: +43 2622 23501
Fax: +43 2622 66212

Belgium - Nivelles
Tel: +32 67 280 900
Fax: +32 67 280 999

Czech & Slovak Republics - Klecany
Tel: +420 284 083 111
Fax: +420 284 083 112

Denmark - Ballerup
Tel: +45 43 560400
Fax: +45 43 733107

Finland - Vantaa
Tel: +358 9 4767 31
Fax: +358 9 4767 3200

France - Contamine
Tel : +33 4 50 25 80 25
Fax : +33 4 50 03 67 37

Germany - Kaarst
Tel: +49 2131 4016-0
Fax: +49 2131 4016-9199

Greece - Athens
Tel: +30 210 933 6450
Fax: +30 210 933 6451

Hungary - Budapest
Tel: +36 1 220 4155
Fax: +36 1 422 1525

Ireland - Dublin
Tel: +353 1 293 9999
Fax: +353 1 293 9999

Italy - Corsico, Milan
Tel: +39 02 4519 21
Fax: +39 02 4479 340

Netherlands - Oldenzaal
Tel: +31 541 585000
Fax: +31 541 585459

Norway - Langhus
Tel: +47 6491 1000
Fax: +47 6491 1090

Poland - Warsaw
Tel: +48 22 573 24 00
Fax: +48 22 573 24 03

Portugal - Leça da Palmeira
Tel: +351 22 999 7360
Fax: +351 22 996 1527

Romania - Bucharest
Tel: +40 21 252 1382
Fax: +40 21 252 3381

Russia - Moscow
Tel: +7 095 234 0054
Fax: +7 095 234 0528

Slovenia - Novo mesto
Tel: +386 7337 6650
Fax: +386 7337 6651

Spain - Madrid
Tel: +34 91 675 7300
Fax: +34 91 675 7711

Sweden - Spånga
Tel: +46 (0) 8 5979 5000
Fax: +46 (0) 8 5979 5120

Switzerland - Bolligen
Tel: +41 31 917 18 50
Fax: +41 31 917 18 59

Turkey - Istanbul
Tel: +90 212 482 91 06
Fax: +90 212 482 91 10

UK - Warwick
Tel: +44 1926 317 878
Fax: +44 1926 317 855

Ukraine - Kiev
Tel: + 380 44 220 7432
Fax: + 380 44 220 6534

Parker Hannifin Ltd.
Pneumatic Division,
Walkmill Lane, Bridgtown,
Cannock, Staffs. WS11 0LR
United Kingdom

CopyTech AB, Borås, Sweden