NASON

NEW THINKING

WDN Series - Wash Down Nason

www.comoso.com

WASH DOWN NASON 'WDN': CONSTRUCTION

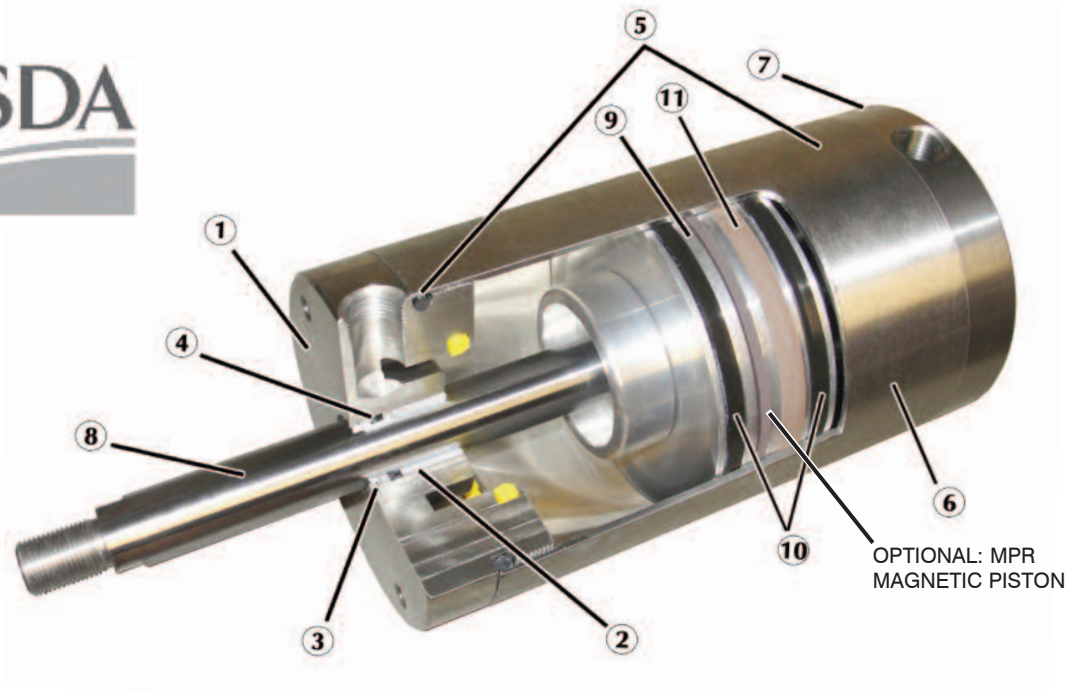

USDA APPROVAL OPTION U - EQUIPMENT ACCEPTANCE CERTIFICATE

UNITED STATES DEPARTMENT OF AGRICULTURE MARKETING AND REGULATORY PROGRAMS AGRICULTURAL MARKING SERVICE

The issuance of this form is based on U.S. Department of Agriculture, Dairy and Grading Branch, Equipment Design Review Section, evaluation of the equipment listed above for compliance with: 3-A Sanitary Standard

① ***ROD GUIDE/HEAD*** – Corrosion resistant 303 stainless steel is ideal for washdown applications. Designed specifically to reduce sharp edges and corners and provide a smooth transition to the cylinder body eliminating catch points for contamination and to allow ease in cleaning. Optional Tapped holes are provided to allow easy mounting of USDA approved secondary wiper retainer or foot bracket as an option.

② ***ROD BUSHING*** – Material is Acetal for extended life

③ ***ROD WIPER*** – A PTFE rod wiper is standard (high temperature or urethane material is optional) and offers resistance to a wide variety of washdown chemicals.

④ ***ROD SEAL*** – Nitrile rod seal (high temperature material is optional) is pressure activated and wear compensating for long life.

⑤ ***BODY SEALS*** – Nitrile material is standard (high temperature material is optional)

⑥ ***BODY*** – Thick walled 300 series stainless steel offers superior corrosion resistance and is designed to minimize gaps with the mating end caps where contamination can build up.

⑦ ***REAR CAP*** – Corrosion resistant 303 stainless steel is ideal for washdown applications. Designed specifically to reduce sharp edges and corners and provide a smooth transition to the cylinder body eliminating catch points for contamination and to allow ease in cleaning. Optional tapped holes allow for easy mounting of NFPA rear pivot or rear clevis mounting brackets.

⑧ ***PISTON ROD*** – Hard Chrome Plated 303 stainless steel for maximum corrosion resistance.

⑨ ***PISTON*** – Precision machined from aluminum (optional stainless steel for internal corrosion resistance when required.)

⑩ ***PISTON SEALS*** – Nitrile material is standard (high temperature material is optional). Seals are pressure activated and wear compensating.

⑪ ***PISTON WEAR BAND*** – 90% Virgin PTFE and 10% Polyphenylene Sulfide filled wear band; 65,000 PSI Compressive Modules; extremely low wear rate.

⑫ ***LUBRICANT*** - Food Grade (H1) Grease.

OPERATING PRESSURE	200 PSI Maximum

OPERATING TEMPERATURE	Standard: -20°F to 200°F (-25°C to 90°C) VS Option: 0°F to 400°F (-20°C to 200°C)

SERIES 'WDN': HOW TO ORDER

WDN - MP2 - 4.00 x 1.50 - U

SERIES	
WDN	WASH DOWN NASON

NFPA MOUNTS	
MX0	TAPPED BOTH ENDS
MXF	TAPPED FRONT
MXR	TAPPED REAR
MP2	CLEVIS REAR
MP4	PIVOT REAR

BORE
1.50
2.00
2.50
3.25
4.00
5.00
6.00
8.00

STROKE
0" to 24" MADE TO ORDER

NOTE: Longer strokes are available, Contact Nason for Application Review

OPTIONS

ADDS LENGTH TO CYLINDER - SEE "OPTION LENGTH ADDER" CHART BELOW.

	A =	EXTENDED PISTON ROD THREAD (Example: A = 2")
X	B	URETHANE BUMPER BOTH ENDS
X	BC	URETHANE BUMPER CAP ONLY
X	BH	URETHANE BUMPER HEAD ONLY
	BP	BUMPER PISTON SEALS (1.50"-8.00" Bore)
	C=	EXTENDED PISTON ROD (SPECIFY) (EXAMPLE: C=2)
	FC	FIXED CUSHIONS
	KK2	INTERMEDIATE MALE ROD THREAD
	KK3	FEMALE ROD THREAD
	KK4	FULL DIAMETER MALE ROD THREAD
	KK5	BLANK ROD END (NO THREADS, "A" = 0")
	L001	MAGNALUBE G GREASE
	LF	LOW FRICTION SEALS
	MPR	MAGNETIC PISTON FOR REED SWITCHES
	OS	OVERSIZE ROD DIAMETER (5.00"-8.00" ONLY)
	P	PROXIMITY SWITCH BOTH ENDS (1.50"-4.00" ONLY)
	PXX	SINKING PROXIMITY SWITCH
	RWU	URETHANE ROD WIPER
	RWV	FLUOROCARBON ROD WIPER
	SSP	STAINLESS STEEL PISTON (WITH WEARBAND)
	U	USDA APPROVED OPTIONS *
	VS	FLUOROCARBON SEALS
	XX	SPECIAL VARIATION (SPECIFY) EXAMPLE - NO PISTON WEAR BAND, ETC.

* USDA APPROVED OPTION- Includes an external wiper as required by the USDA. The cylinder rod length will automatically increase by the amount required to accommodate the seal retaining bracket. See page 64.

OPTION NOTES:

- Option (B) Bumpers cannot be combined with Option (FC) Cushions or Option (P) Prox. Switches
- If Option (P) (Proximity switch both ends) and Option (VS) are ordered in combination, the standard proximity switch thread seal material will be used
- Option (MPR) Magnetic Piston and Option (VS) High Temperature Seals should be specified for chemical compatability requirements only. The piston magnet is nitrile based, hence the temperature rating remains at 200°F.

OPTION LENGTH ADDER
(ADD TO CATALOG BASIC OVERALL LENGTH DIMENSIONS)

BORE	OPTION B	OPTION BC	OPTION BH
1.50	0.250"	0.125"	0.125"
2.00	0.250"	0.125"	0.125"
2.50	0.250"	0.125"	0.125"
3.25	0.250"	0.125"	0.125"
4.00	0.250"	0.125"	0.125"
5.00	0.500"	0.250"	0.250"
6.00	0.500"	0.250"	0.250"
8.00	0.500"	0.250"	0.250"

SERIES 'WDN' DIMENSIONS: FRONT & REAR MOUNT

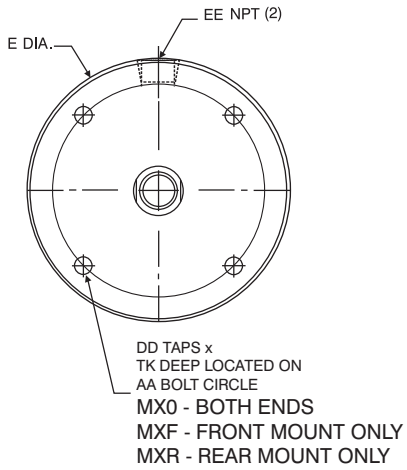

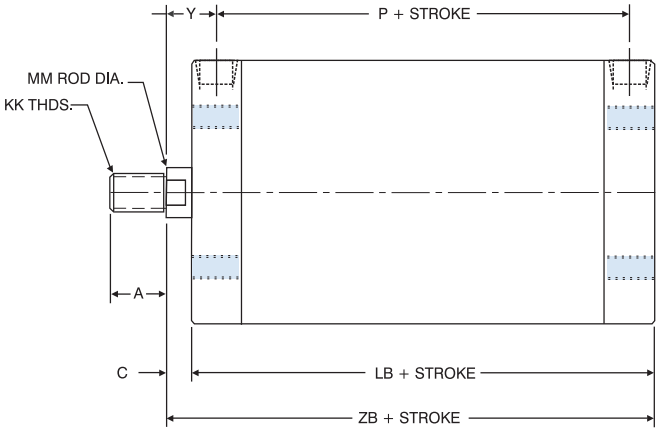

'MX0', 'MXR' & 'MXF' MOUNT DIMENSIONS

BORE	ROD DIAMETER	A	AA	C	DD	E Dia.	EE NPT	KK	LB	MM	TK	Y	P	ZB
1.50	0.625 Standard	0.750	1.450	0.560	8-32	1.750	0.375	7/16-20	5.210	0.625	0.330	1.990	3.160	5.770
2.00	0.625 Standard	0.750	1.850	0.560	10-24	2.250	0.375	7/16-20	5.450	0.625	0.375	1.940	3.150	6.010
2.50	0.625 Standard	0.750	2.150	0.560	1/4-20	2.750	0.375	7/16-20	5.950	0.625	0.500	1.930	3.390	6.510
3.25	1.000 Standard	1.125	2.620	0.640	5/16-18	3.500	0.500	3/4-16	7.430	1.000	0.625	2.640	3.830	8.070
4.00	1.000 Standard	1.125	3.250	0.640	3/8-16	4.250	0.500	3/4-16	7.430	1.000	0.750	2.520	3.930	8.070
5.00	1.000 Standard	1.125	4.250	0.500	3/8-16	5.250	0.500	3/4-16	5.750	1.000	0.625	1.000	4.750	6.250
	1.375 Oversized	1.625	4.250	0.625	3/8-16	5.250	0.500	1-14	5.750	1.375	0.625	1.125	4.750	6.375
6.00	1.375 Standard	1.625	5.000	0.625	1/2-13	6.250	0.500	1-14	5.750	1.375	0.875	1.125	4.750	6.375
	1.750 Oversized	2.000	5.000	0.750	1/2-13	6.250	0.500	1-1/4-12	5.750	1.750	0.875	1.250	4.750	6.500
8.00	1.375 Standard	1.625	6.500	0.625	5/8-11	8.375	0.500	1-14	5.875	1.375	1.000	1.125	4.875	6.500
	1.750 Oversized	2.000	6.500	0.750	5/8-11	8.375	0.500	1-1/4-12	5.875	1.750	1.000	1.250	4.875	6.625

www.comoso.com

SERIES 'WDN' DIMENSIONS: CLEVIS MOUNT

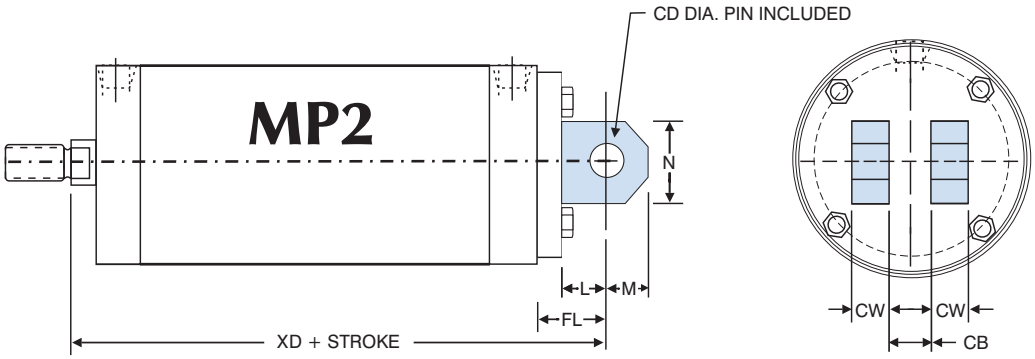

'MP2' CLEVIS MOUNT DIMENSIONS									
BORE	ROD DIAMETER	CB	CD	CW	FL	L	M	N	XD
1.50	0.625 Standard	0.750	0.500	0.490	1.125	0.750	0.350	0.700	6.900
2.00	0.625 Standard	0.750	0.500	0.500	1.125	0.750	0.400	0.800	7.140
2.50	0.625 Standard	0.750	0.500	0.500	1.125	0.750	0.400	0.800	7.640
3.25	1.000 Standard	1.250	0.750	0.625	1.875	1.250	0.600	1.000	9.940
4.00	1.000 Standard	1.250	0.750	0.625	1.875	1.250	0.750	1.400	9.940
5.00	1.000 Standard	1.250	0.750	0.625	1.875	1.250	0.875	1.750	8.125
	1.375 Oversized	1.250	0.750	0.625	1.875	1.250	0.875	1.750	8.250
6.00	1.375 Standard	1.500	1.000	0.750	2.250	1.500	1.000	2.000	8.625
	1.750 Oversized	1.500	1.000	0.750	2.250	1.500	1.000	2.000	8.750
8.00	1.375 Standard	1.500	1.000	0.750	2.250	1.500	1.000	3.500	8.750
	1.750 Oversized	1.500	1.000	0.750	2.250	1.500	1.000	3.500	8.875

SERIES 'WDN' DIMENSIONS: PIVOT MOUNT

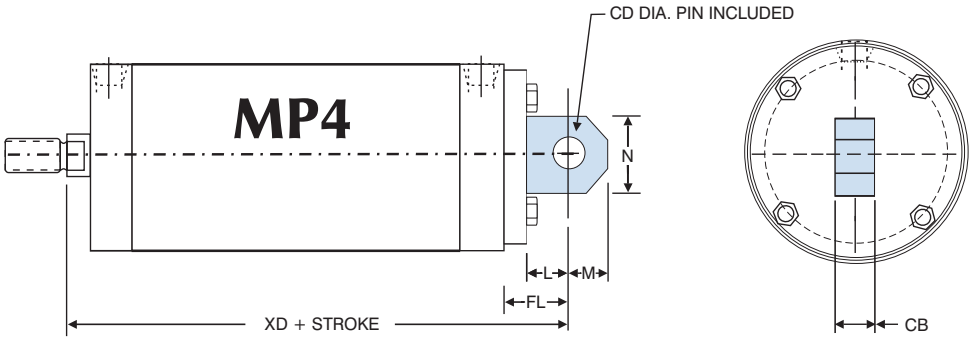

'MP4' PIVOT MOUNT DIMENSIONS								
BORE	ROD DIAMETER	CB	CD	FL	L	M	N	XD
1.50	0.625 Standard	0.750	0.500	1.125	0.750	0.350	0.700	6.900
2.00	0.625 Standard	0.750	0.500	1.125	0.750	0.400	0.800	7.140
2.50	0.625 Standard	0.750	0.500	1.125	0.750	0.400	0.800	7.640
3.25	1.000 Standard	1.250	0.750	1.875	1.250	0.600	1.000	9.940
4.00	1.000 Standard	1.250	0.750	1.875	1.250	0.750	1.400	9.940
5.00	1.000 Standard	1.250	0.750	1.875	1.250	0.875	1.750	8.125
	1.375 Oversized	1.250	0.750	1.875	1.250	0.875	1.750	8.250
6.00	1.375 Standard	1.500	1.000	2.250	1.500	1.000	2.000	8.625
	1.750 Oversized	1.500	1.000	2.250	1.500	1.000	2.000	8.750
8.00	1.375 Standard	1.500	1.000	2.250	1.500	1.000	3.500	8.750
	1.750 Oversized	1.500	1.000	2.250	1.500	1.000	3.500	8.875

www.comoso.com

SERIES 'WDN' DIMENSIONS: USDA APPROVED OPTION "U"

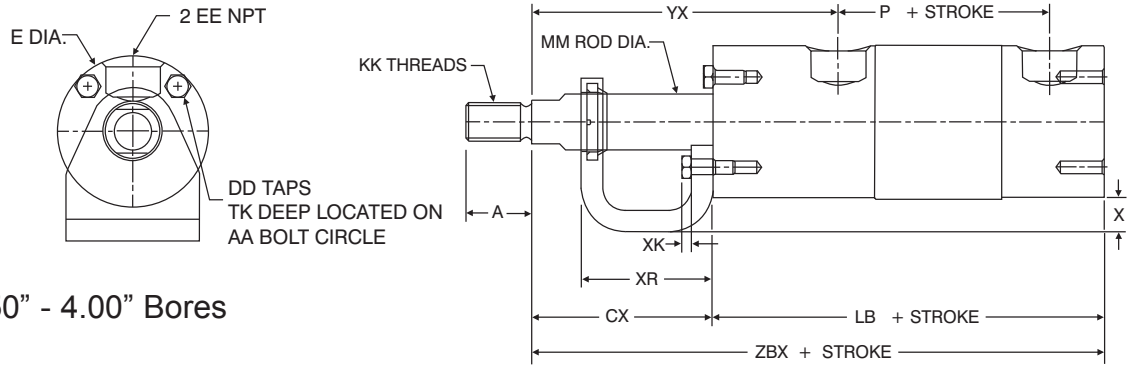

1.50" - 4.00" Bores

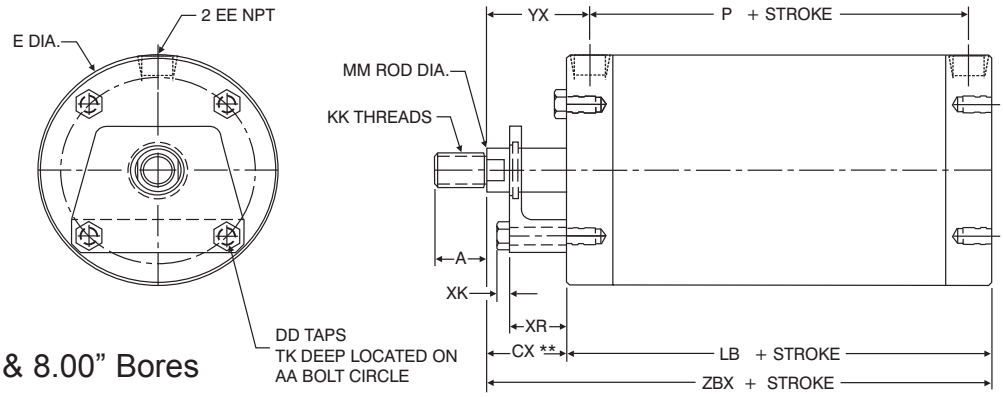

5.00", 6.00" & 8.00" Bores

EXTERNAL WIPER 'OPTION U' DIMENSIONS																	
BORE	ROD DIAMETER	A	AA	CX	DD	E Dia.	EE NPT	KK	LB	MM	TK	YX	P	XR	XK	ZBX	X
1.50	0.625 Standard	0.750	1.450	2.060	8-32	1.750	0.375	7/16-20	5.210	0.625	0.330	3.490	3.160	1.500	0.100	7.270	0.375
2.00	0.625 Standard	0.750	1.850	2.060	10-24	2.250	0.375	7/16-20	5.450	0.625	0.375	3.440	3.150	1.500	0.120	7.510	0.500
2.50	0.625 Standard	0.750	2.150	2.060	1/4-20	2.750	0.375	7/16-20	5.950	0.625	0.500	3.430	3.390	1.500	0.170	8.010	0.260
3.25	1.000 Standard	1.125	2.620	2.140	5/16-18	3.500	0.500	3/4-16	7.430	1.000	0.625	4.140	3.830	1.500	0.240	9.570	0.250
4.00	1.000 Standard	1.125	3.250	2.140	3/8-16	4.250	0.500	3/4-16	7.430	1.000	0.750	4.020	3.930	1.500	0.270	9.570	0.250
5.00	1.000 Standard	1.125	4.250	1.750	3/8-16	5.250	0.500	3/4-16	5.750	1.000	0.625	2.250	4.750	1.250	0.270	7.500	N/A
	1.375 Oversized	1.625	4.250	1.875	3/8-16	5.250	0.500	1-14	5.750	1.375	0.625	2.375	4.750	1.250	0.270	7.625	N/A
6.00	1.375 Standard	1.625	5.000	1.875	1/2-13	6.250	0.500	1-14	5.750	1.375	0.875	2.375	4.750	1.250	0.360	7.625	N/A
	1.750 Oversized	2.000	5.000	2.000	1/2-13	6.250	0.500	1 1/4-12	5.750	1.750	0.875	2.500	4.750	1.250	0.360	7.750	N/A
8.00	1.375 Standard	1.625	6.500	1.875	5/8-11	8.375	0.500	1-14	5.875	1.375	1.000	2.375	4.875	1.250	0.440	7.750	N/A
	1.750 Oversized	2.000	6.500	2.000	5/8-11	8.375	0.500	1 1/4-12	5.875	1.750	1.000	2.500	4.875	1.250	0.440	7.875	N/A

NOTE: The USDA-approved 'Option U' includes an external wiper as required by the USDA. Cylinder rod length is increased as shown.

EXAMPLES OF 'U OPTION' MOUNTING BRACKET

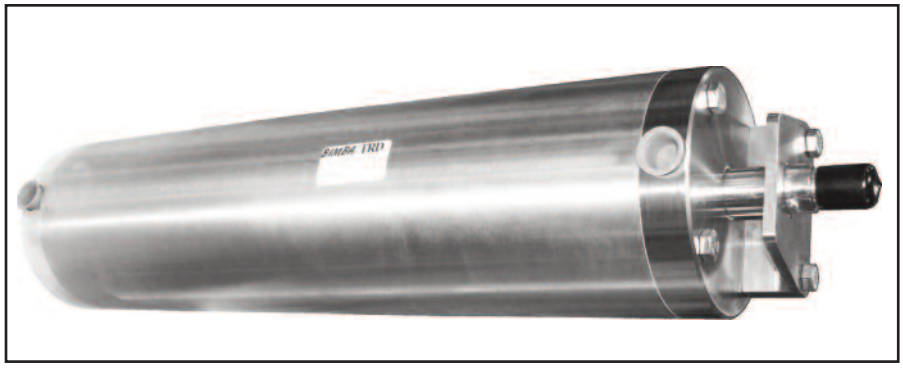

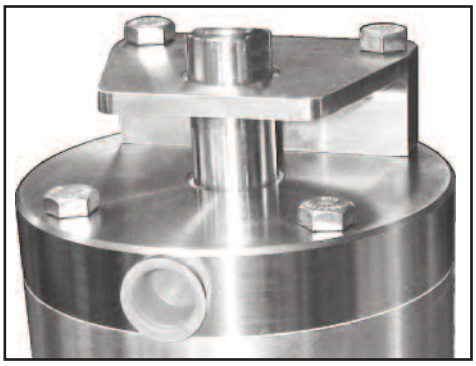

SERIES 'WDN': OPTIONS

About Rod End Styles

Style 1 Male Rod End is STANDARD

Other NFPA Styles can be specified (See Chart).

Need a rod end not listed?
NO PROBLEM! Each Piston Rod is made to order and does not delay shipment. Coarse (UNC) threads, Metric threads or just plain rod ends are common. Thread lengths are also made to order (Specify: "A"=Length).

NEED SOMETHING NOT LISTED?
Just send us a sketch.
In most cases, quotes are turned around in one day!

STYLE 1 & 2
KK1 & KK2

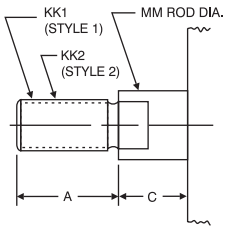

STYLE 3
KK3

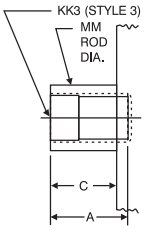

STYLE 4
KK4

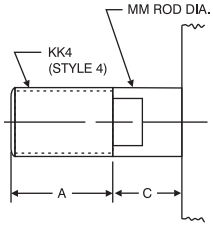

STYLE 5
KK5

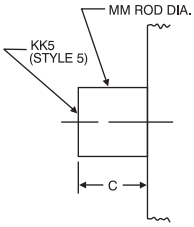

BORE	MM ROD DIAMETER	STANDARD		OPTIONAL							C
		Style 1 - Male		Style 2 - Male		Style 3 - Female		Style 4 - Male		Style 5 - Blank	
		KK1	A	KK2	A	KK3	A	KK4	A	KK5	
1.50, 2.00, 2.50	0.625 Standard	7/16-20	0.750	1/2-20	0.750	7/16-20	0.750	5/8-18	0.750	No Threads	0.560
3.25, 4.00	1.000 Standard	3/4-16	1.125	7/8-14	1.125	3/4-16	1.125	1-14	1.125	No Threads	0.640
5.00	1.000 Standard	3/4-16	1.125	7/8-14	1.125	3/4-16	1.125	1-14	1.125	No Threads	0.500
	1.375 Oversize	1-14	1.625	1 1/4-12	1.625	1-14	1.625	1 3/8-12	1.625	No Threads	0.625
6.00 & 8.00	1.375 Standard	1-14	1.625	1 1/4-12	1.625	1-14	1.625	1 3/8-12	1.625	No Threads	0.625
	1.750 Oversize	1 1/4-12	2.000	1 1/2-12	2.000	1 1/4-12	2.000	1 3/4-12	2.000	No Threads	0.750

FOOT BRACKET ACCESSORY (INCHES)

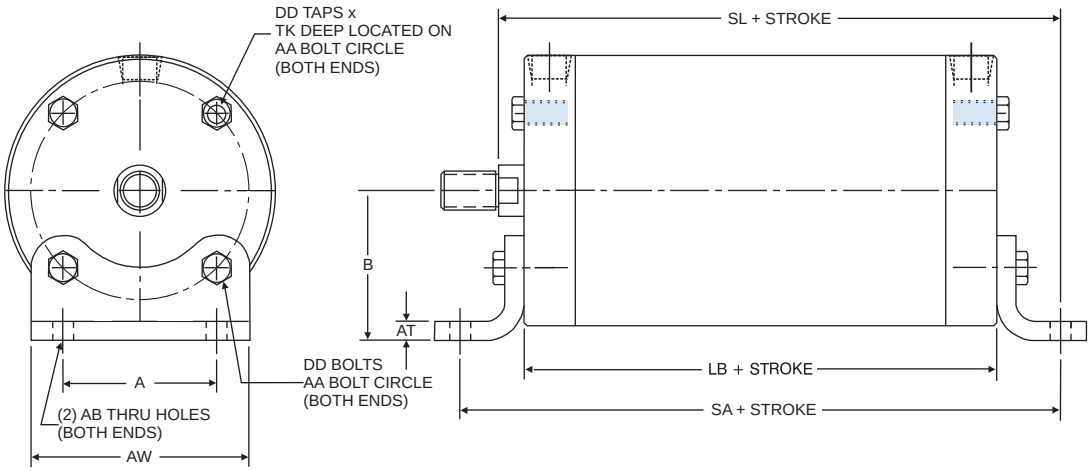

BORE	ROD DIAMETER	FOOT BRACKET KIT	A	AB	AW	B	AT	DD	AA	LB	TK	SA	SL
1.50	0.625 Standard	RS-FB150	1.030	0.188	1.520	1.250	0.250	8-32	1.450	5.210	0.330	6.620	6.460
2.00	0.625 Standard	RS-FB200	1.310	0.219	1.810	1.620	0.250	10-24	1.850	5.450	0.375	7.580	7.070
2.50	0.625 Standard	RS-FB250	1.550	0.281	2.300	1.640	0.250	1/4-20	2.150	5.950	0.500	7.900	7.480
3.25	1.000 Standard	RS-FB325	1.860	0.344	2.860	2.000	0.250	5/16-18	2.620	7.430	0.625	9.740	9.230
4.00	1.000 Standard	RS-FB400	2.300	0.406	3.500	2.375	0.250	3/8-16	3.250	7.430	0.750	10.050	9.390
5.00	1.000 Standard	RS-FB500	3.000	0.688	4.500	2.875	0.188	3/8-16	4.250	5.750	0.625	8.500	7.625
	1.375 Oversized												7.750
6.00	1.375 Standard	RS-FB600	4.000	0.813	5.500	3.375	0.188	1/2-13	5.000	5.750	0.875	8.500	7.750
	1.750 Oversized												7.875
8.00	1.375 Standard	RS-FB800	5.000	0.813	7.000	4.440	0.250	5/8-11	6.500	5.875	1.000	9.500	8.312
	1.750 Oversized												8.438

Note: Foot bracket mounting kits include two brackets and eight stainless steel screws.
Can only be applied to MX0 mounting styles

www.comoso.com

SERIES 'WDN' OPTIONS: SWITCHES

PROXIMITY SWITCH OPTION DIMENSIONS (OPTIONS P & PXX)

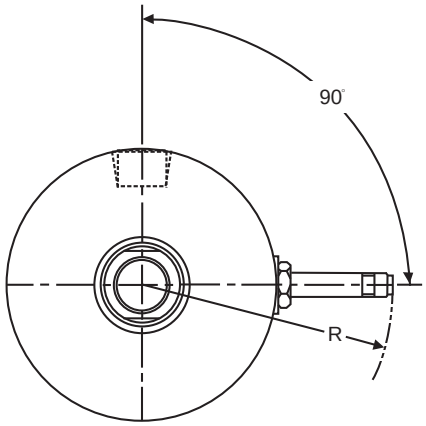

BORE SIZE	DIMENSION R
1.50	3.04″
2.00	3.04″
2.50	3.04″
3.25	3.19″
4.00	3.19″
5.00	N/A
6.00	N/A
8.00	N/A

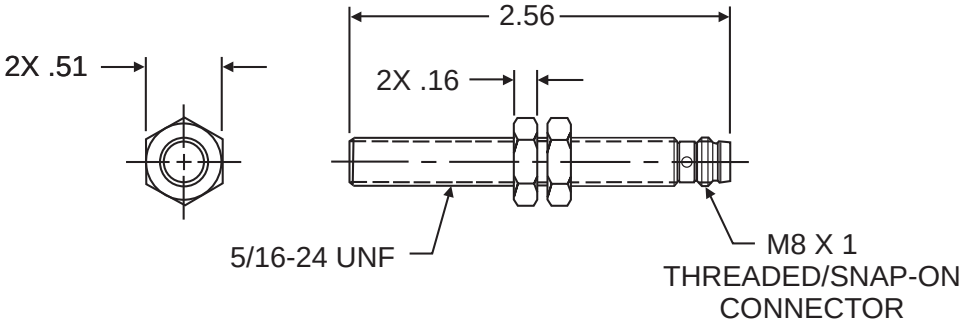

Specifications

Output: **Option P:** PNP Sourcing output, normally open
Option PXX: NPN Sinking output, normally open
Load Current: 100mA max.
Leakage Current: 10uA max.
Voltage Drop: 2VDC
Short Circuit and Overload Protection: yes
Reverse Polarity Protection: yes
Supply Voltage: 10-30 VDC
LED: yes
Current Consumption: 15mA
Repeatability: 0.010° (.25mm)
Hysteresis: 5%
Response Time: 330uS
Electromagnetic Compatibility Compliance: NEMA ICS5-1996
Protection Class: IP67
Ambient Temperature: -14°F to 158°F (-25°C to 70°C)
Housing Material: Stainless Steel
Sensing Face: Crastin
Approvals: UL-General Purpose
CSA-General Purpose
FM-Nonincendive

www.comoso.com

SWITCH OPTIONS: SWITCH ORDERING INSTRUCTIONS

TO ORDER, SPECIFY: Switch Model, Lead Type, and Bracket Size

R10 X

Switch Model	
R10	= AC/DC Reed
RAC	= High Power AC Reed
RHT	= Extended Temperature Reed
MSS	= Solid State
R10P	= AC/DC Reed with Circuit Protection

Switch Lead Options	
(leave blank)	= 24″ Plain Cable
X	= 120″ Plain Cable
Q	= 8mm Quick Connect (not available on RAC, or RHT)

Refer to catalog pages 184-190 for complete specifications.

Switch Mounting Bands	
USB25	Use with bores: 1.50″, 2.00″, 2.50″
USB50	Use with bores: 3.25″, 4.00″, 5.00″
USB80	Use with bores: 6.00″, 8.00″

Switch Accessories: Quick Connect Cord Sets	
MODEL	DESCRIPTION
C4-T	8mm Straight Quick Connect Cord X 2 Meter (78″)
C4X-T	8mm Straight Quick Connect Cord X 5 Meter (196″)

About our switches

Our switches are different! The most common complaint in the market is the unreliability of magnetically operated switches. Most cylinder piston magnets have about 10-30% more power than required to operate the switch. This results in erractic operation, a nuisance for maintenance and lowering overall plant productivity.

Nason designed our magnet to have 50-100% more power than required to operate our switch! The combination of Nason R10, R10P, RAC, RHT and MSS Switches and our Cylinders, raises the reliability of switch operation comparable to that of many mechanically operated limit switches.

Application recommendations and precautions

- Noise suppression - Motors and valve solenoids will produce high pulses throughout an electrical system. Therefore, primary and control circuit wiring should not be mixed in the same conduit. Separate power supplies for both logic level signals (Microprocessor, P.C., CPU, Input Devices) and Output Field Devices (Motors, Valve Solenoids) is recommended.
- Never connect R10, R10P, RHT or MSS type switches without a load present. The switch will be destroyed.
- Some electrical loads may be capacitive. Capacitive loading may occur due to distributed capacity in cable runs over 25 feet. Use switch model RAC whenever capacitive loading may occur.
- To obtain optimum performance and long life, switches should not be subjected to strong magnetic fields, extreme temperatures (outside of specifications), or excessive ferrous filings or chip buildup.
- Improper wiring may damage or destroy the switch. Therefore, the wiring diagrams along with the listed power ratings, should be carefully observed before connecting power to the switch.

Following these tips can save time and provide trouble free installations!

Other switches available:

- 12mm Quick Connect
- Special Length Cable
- Weld Immune Switch
- Pulse Extension Switch (For Sensing Mid-Stroke Positions)
- Change Over Switch (SPDT)

(Consult factory for details.)

Specify 'M' Option for ALL switch models when ordering actuators.

www.comoso.com

SERIES 'WDN': ACCESSORIES

UNIVERSAL SWITCH BAND MOUNTING ILLUSTRATIONS

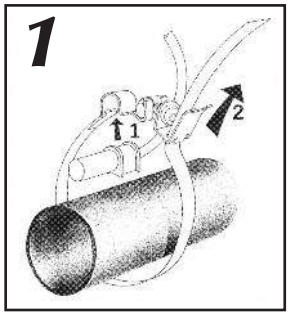

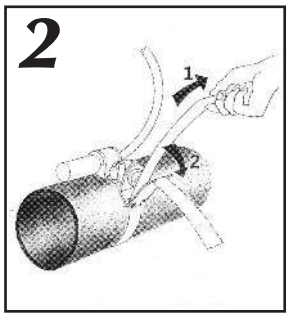

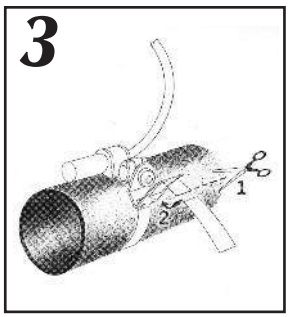

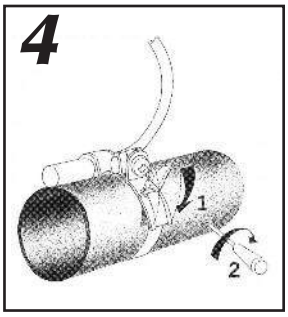

WARNING:
BE CAREFUL NOT TO SLIP WHEN PULLING BAND TIGHT. USE THUMB AND FINGER AND DO NOT PULL TOO HARD, THE BAND TIGHTENS WELL WITH THREAD TO SPARE.

STAINLESS STEEL ALIGNMENT COUPLERS *(INCHES)*

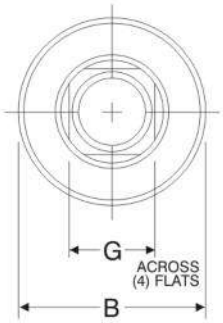

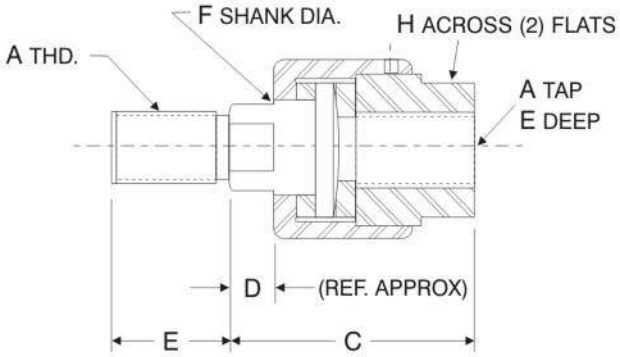

ALIGNMENT COUPLERS (INCHES)									
PART NO.	A	B	C	D	E	F	G	H	MAXIMUM PULL AT YIELD (LBS.)
SS-AC250	1/4 -28	1.125	1.750	0.375	0.500	0.500	0.375	0.688	1,000
SS-AC312	5/16 -24	1.125	1.750	0.375	0.500	0.500	0.375	0.688	1,800
SS-AC375	3/8 -24	1.125	1.750	0.375	0.500	0.500	0.375	0.688	2,900
SS-AC437	7/16 -20	1.250	2.000	0.438	0.750	0.625	0.500	0.813	4,000
SS-AC500	1/2 -20	1.250	2.000	0.438	0.750	0.625	0.500	0.813	5,500
SS-AC625	5/8 -18	1.250	2.000	0.438	0.750	0.625	0.500	0.813	7,000
SS-AC750	3/4 -16	1.750	2.313	0.438	1.125	0.969	0.813	1.125	10,300
SS-AC875	7/8 -14	1.750	2.313	0.438	1.125	0.969	0.813	1.125	12,000
SS-AC1000	1 -14	2.500	2.938	0.438	1.625	1.344	1.156	1.625	15,000
SS-AC1250	1 1/4 -12	2.500	2.938	0.438	1.625	1.344	1.156	1.625	17,000
SS-AC1500	1 1/2 -12	3.250	4.375	0.875	2.250	1.969	1.750	2.375	20,000

www.comoso.com

SERIES 'WDN': BASIC ACCESSORIES

Accessories (303 Stainless Steel)

CLEVIS PIN (WITH COTTER PINS)			
PART NO.	CD	LH	LP
SS-CP500	0.500	2.250	1.938
SS-CP750	0.750	3.000	2.719
SS-CP1000	1.000	3.500	3.219
SS-CP1375	1.375	5.000	4.250
SS-CP1750	1.750	6.000	5.500

CLEVIS PIN (INCLUDES COTTER PINS)

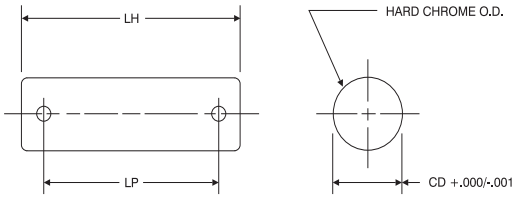

(Clevis Pins sold with (2) S.S. Cotter Pins)

ROD CLEVIS							
PART NO.	CB	CD	CE	CW	ER	KK	L
SS-RC437	0.750	0.500	1.500	0.500	0.500	7/16 -20	0.750
SS-RC500						1/2 -20	
SS-RC750	1.250	0.750	2.375	0.625	0.750	3/4 -16	1.250
SS-RC1000	1.500	1.000	3.125	0.750	1.000	1 -14	1.500
SS-RC1250	2.000	1.375	4.125	1.000	1.375	1 1/4 -12	2.125
SS-RC1500	2.500	1.750	4.500	1.250	1.750	1 1/2 -12	2.250

ROD CLEVIS

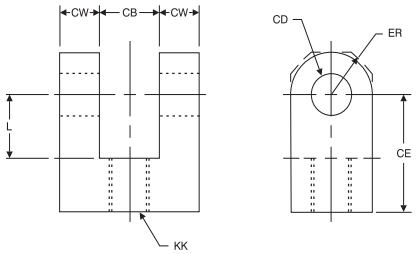

(Clevis Pins sold separately from Rod Clevis)

ROD EYE						
PART NO.	A	CA	CB	CD	ER	KK
SS-RE437	0.750	1.500	0.750	0.500	0.625	7/16 -20
SS-RE500						1/2 -20
SS-RE750	1.125	2.063	1.250	0.750	0.875	3/4 -16
SS-RE1000	1.625	2.813	1.500	1.000	1.188	1 -14
SS-RE1250	2.000	3.438	2.000	1.375	1.563	1 1/4 -12
SS-RE1500	2.250	4.000	2.500	1.750	2.000	1 1/2 -12

ROD EYE

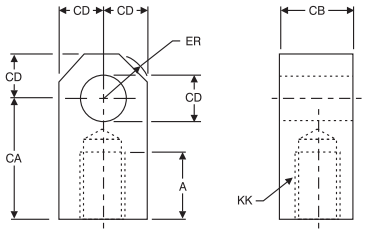

(Clevis Pins sold separately from Rod Eyes)

CLEVIS BRACKETS AND EYE BRACKETS											
	PART NO.	BA	CB	CD	CW	DD	E	F	FL	L	M
CLEVIS BRACKETS	SS-CB500	1.625	0.750	0.500	0.500	3/4 -24	2.500	0.375	1.125	0.750	0.625
	SS-CB750	2.563	1.250	0.750	0.625	1/2 -20	3.500	0.625	1.875	1.250	0.750
	SS-CB1000	3.250	1.500	1.000	0.750	5/8 -18	4.500	0.750	2.250	1.500	1.000
	SS-CB1375	3.813	2.000	1.375	1.000	5/8 -18	5.000	0.875	3.000	2.125	1.375
EYE BRACKETS	SS-EB500	1.625	0.750	0.500	N/A	0.406	2.500	0.375	1.125	0.750	0.500
	SS-EB750	2.563	1.250	0.750		0.532	3.500	0.625	1.875	1.250	0.750
	SS-EB1000	3.250	1.500	1.000		0.656	4.500	0.750	2.250	1.500	1.000
	SS-EB1375	3.813	2.000	1.375		0.656	5.000	0.875	3.000	2.125	1.375

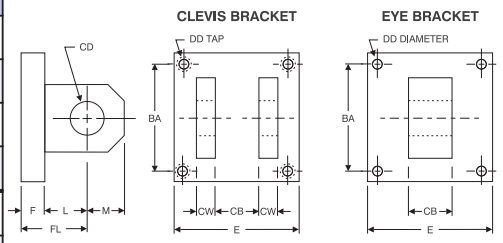

(Clevis Pins sold separately from Clevis & Eye Brackets)

WEIGHTS OF CYLINDERS

APPROXIMATE WEIGHT FOR STANDARD RODS (LBS.)					
CYLINDER BORE	BASE WEIGHT	ADD PER INCH OF STROKE	CYLINDER BORE	BASE WEIGHT	ADD PER INCH OF STROKE
1.50	2.82	0.27	4.00	30.20	0.70
2.00	5.25	0.33	5.00	24.10	0.84
2.50	8.92	0.39	6.00	36.45	1.12
3.25	20.63	0.61	8.00	69.80	1.80

www.comoso.com

SERIES 'WDN': OPTIONS

A= Extended Piston Rod Thread

"A=" refers to the length of piston rod thread.

Shorter than standard lengths can be furnished at no charge. Longer than standard lengths can be furnished at a nominal price adder. *Special length threads do not delay orders!*

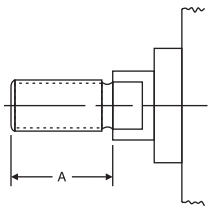

B BC BH Bumpers

Urethane impact dampening bumpers, used when cylinder speeds do not allow for standard cushions.

BC=Cap Bumper **BH**=Head Bumper **B**=Head & Cap Bumper

Note: Each bumper for 1.50"-4.00" Bore adds .125" to cylinder length
Each bumper for 5.00"-8.00" Bore adds .250" to cylinder length

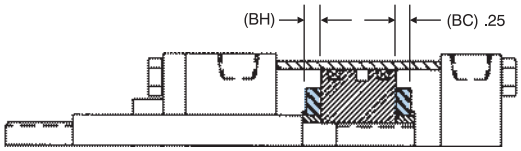

BP Bumper Piston Seals

1.50" Bore Shown

Available on 1.50" to 8.00" Bore

Nason's Bumper Piston Seal, when used with our advanced cushion design, decelerates the cylinder at end of stroke - reducing noise and extending cylinder life.

Standard Material: Nitrile
Operating Temp: -20°F to 200°F (-25°C to 90°C)

Optional Material: Fluorocarbon
Available in 1.50"-8.00" Bores
Operating Temp: 0°F to 400°F (-18°C to 205°C)

Operating Pressure: 200 PSI Air (17 BAR)

For additional info, see page 144.

L001 MagnaLube G Grease

MagnaLube G Grease is our standard lubricant used for all products except for PFLF and WDN Series.

Magnalube-G is a non-soap elastomer/PTFE grease designed for superior performance in a wide range of applications. Insoluble in water, Magnalube-G is a nonmigratory grease that tends to "stay put" in the cylinder if there is no other oil present.
Note: if an FRL is used in the pneumatic system, the FRL must be properly maintained to provide continued cylinder lubrication as any oil will negate the Magnalube-G.
See www.magnalube.com for more information.

Color: Green

Recommended temperature range: -20°F to 200°F (-25°C to 90°C)

LF Low Friction

"LF" Low Friction option incorporates the use of round-lip, extremely low friction carboxilated nitrile seals. Round-lip seals "hydroplane" on opposed sealing surfaces, and have a lower running and break-away friction.

BORE SIZES: 1.50" to 8.00" Bore
MATERIAL: Carboxilated Nitrile
OPERATING TEMPERATURE: -20°F to 200°F (-25°C to 90°C)
OPERATING PRESSURE: 200 PSI AIR (17 BAR)

MPR Magnetic Piston

"MPR" Magnetic Pistons are used in conjunction with Nason R10, R10P, RHT, RAC Reed and MSS Solid State Switches.
(See pages 186-191 for switches)

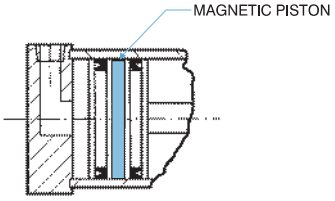

OS Oversize Rod

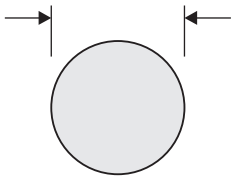

OVERSIZED PISTON ROD

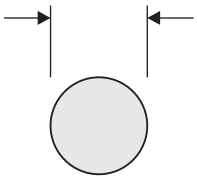

STANDARD PISTON ROD

Applications requiring long strokes may require oversize piston rod diameters to prevent sagging or buckling. To determine the recommended rod diameter, refer to Chart 3 on page 156 in Full Line Catalog. **(Available on 5.00"-8.00" Bore in WDN Series Only.)**

RWU Rod Wiper made of Urethane

Abrasion resistant urethane provides aggressive wiping action in most environments. External lip design prevents debris from entering cylinder.

VS RWV Fluorocarbon Seals

Higher temperature performance: 0°F to 400°F (-20°C to 200°C)
Higher Chemical resistance: Resists most wash down solutions.

Note: Teflon wiper is used on "VS" Fluorocarbon seal option unless RWV is requested also.

www.comoso.com

NOTES