- Introduction
- For your own safety
- System description
- Art. no. 57108, ModbusTCP slave, bus node
- Modbus TCP bus node
- General data
- Technical data

CUBE20S ModbusTCP manual

Bus nodes incl. power module

This document is valid for the following products:

Name	Art. no.
CUBE20S system ModbusTCP slave Bus nodes incl. power module	57108

Status
Manual no.: 57108_hdb_en_10
Language: EN
Version: 1.0
Date: 22.5.14

Contact
Murrelektronik GmbH
Falkenstraße 3
D-71570 Oppenweiler
Phone +49 (0) 7191 47-0
Fax +49 (0) 7191 47-491000
info@murrelektronik.de

Table of contents

1	**Introduction**	**5**
1.1	Service and support	5
1.2	Introduction / about this document	6
1.3	Symbols	6
1.4	Trademarks	7
2	**For your own safety**	**8**
2.1	Target group	8
2.2	Intended purpose	8
2.3	General safety instructions	8
2.4	Notes on electrostatically sensitive equipment	9
2.5	EMC installation guidelines	9
2.6	Notes on spare parts and accessories	10
2.7	Environmentally friendly disposal	10
2.8	EC Declaration of Conformity	10
2.9	Warranty and liability	11
3	**System description**	**12**
3.1	System	12
3.2	Dimensions	15
3.3	Mounting	16
3.4	Disassembling and replacing modules	20
3.5	Wiring	25
3.6	Troubleshooting - LEDs	29
4	**Art. no. 57108, ModbusTCP slave, bus node**	**31**
4.1	Features	31
4.2	Design	32
5	**Modbus TCP bus node**	**36**
5.1	Basics	36
5.2	Access to the Ethernet bus node	39
5.3	System access	49
5.4	ModbusTCP	52
5.5	Register assignment	56
5.6	LED status indication	58
6	**General data**	**59**

7 Technical data 60

8 Annex 61
8.1 Accessories 61
8.2 Glossary 62
8.3 Legal information 64

1 Introduction

1.1 Service and support

Sales

Our sales staff in the company, field service and technicians will support you at all times.

CONNECTIVITY system consultants

Our system consultants are your competent contact persons when you want to develop CONNECTIVITY solutions. Together with you, they find the optimum solutions for your electrical installations.

Our CONNECTIVITY consultants find ways that help you to permanently improve the competitiveness of your machines and plants.

Customer Service Center (CSC)

Our staff of the Customer Service Center will help you with all questions concerning installation and set-up. They support you, for example, if you have problems when combining hardware and software products of different manufacturers.

There are numerous support tools and possibilities for measurements - both for fieldbus systems and electromagnetic interference.

Please do not hesitate to call us on +49 (0) 7191 47-2050 or send us an e-mail to: csc@murrelektronik.de.

Service addresses

Please see our website for your contact person:

www.murrelektronik.com

1.2 Introduction / about this document

Function of this document

This document describes the use of the module
ModbusTCP slave
from the Cube20S system of Murrelektronik GmbH. It includes a description of the design, engineering and application.

1.3 Symbols

This document includes information and notes that have to be observed for your own safety and to avoid personal and material damage. They are characterized as follows:

DANGER!

Immediate danger

➔ Failure to observe this warning involves an imminent risk of death or serious injuries!

WARNING!

Possible danger

➔ Failure to observe this warning may cause death or serious injuries.

CAUTION!

Low-risk danger

➔ Failure to observe this warning causes minor to moderate injuries.

NOTICE

Risk of material damage

➔ Failure to observe this warning causes material damage.

NOTE
Other technical information and notes of Murrelektronik GmbH.

RECOMMENDATION
Notes with this symbol are recommendations of Murrelektronik GmbH.

Products and Accessories
This symbol refers to accessories or product recommendations.

Instruction for use

➔ An arrow marks instructions for use.

➔ Read and observe the instructions for use.

1 | If they are numbered, it is absolutely necessary to follow them in the correct order.

2 | Read and observe the instructions for use.

Hexadecimal numbers Hexadecimal numbers are written in the **0x** format usually used by programmers, e.g. : **0x**15AE = 15AEh

1.4 Trademarks

The trademarks of the following companies are used in this documentation:

Adobe Systems Corp.	Adobe Acrobat Reader
Microsoft Corp.	Microsoft Windows 7, Windows Vista, Windows 2000, Windows XE/XP and Microsoft Internet Explorer
PROFIBUS / PROFINET International (P.I.)	PROFINET, PROFINET IO
ODVA Open DeviceNet Vendor Association	EtherNet/IP
Gould Inc. Corporation	Modbus
Siemens AG	S5-200, S5-300, S5-400 S7-200, S7-300, S7-400

2 For your own safety

2.1 Target group

Users

This manual is intended for users who have knowledge of automation systems.

Documentation

Please give this manual to all employees involved in the following tasks:

- Planning
- Installation
- Set-up
- Operation

2.2 Intended purpose

Designated use

The Cube20S system has been designed and manufactured for:

- communication and process control
- general control and automation tasks
- industrial use
- operation under the ambient conditions specified under technical data
- installation in a switch cabinet

Foreseeable misuse

The device is not approved for being used:

- in potentially explosive atmospheres (EX Zone)
- outside of switch cabinets.

2.3 General safety instructions

Note:

- the relevant safety and accident prevention regulations;
- the EC Directives or other national regulations;
- generally recognized safety rules;
- the section 2.5 "EMC installation guidelines".

NOTICE

Defective device!

Improper use of the hardware and software can cause damage to the device.

➔ Only qualified personnel of Murrelektronik GmbH may manipulate the device.

➔ Only use the device to the extent described in the manual.

Avoid accidents caused by electrical voltage!

➔ Comply with the 5 safety rules of electrical engineering!

➔ Disconnect the device from the mains.

➔ Then carry out installation or repair work.

Avoid personal and material damage due to malfunctions!

➔ Provide external circuit breakers.

➔ The device may only be operated within the specified tolerances.

Avoid undefined states!

- Select and install connection lines so that capacitive and inductive interferences do not have adverse effects on the system.
- Protect the device against improper and unintended use.

2.4 Notes on electrostatically sensitive equipment

NOTICE

Overvoltage due to electrostatic discharge!

The assemblies might get damaged.

- Ensure sufficient grounding of persons and working material!

Handling

Murrelektronik assemblies include highly integrated MOS components. These components are extremely sensitive to overvoltages occurring, for example, due to electrostatic discharge. Assemblies at risk are marked by the adjacent symbol.

The symbol is fixed to assemblies, sub-racks or packaging and indicates electrostatically sensitive equipment. These assemblies may become irreparably damaged by voltage and energy levels which are far below the perception levels of human beings.

If a person who is not electrostatically discharged handles electrostatically sensitive equipment, voltages may be produced. They may damage components, impair the functioning of the assemblies or render the assembly inoperative. Frequently, assemblies damaged like this cannot directly be recognized as faulty. The fault may show only after longer operation.

Components damaged by electrostatic discharge may produce temporary faults in case of temperature changes, vibrations or load changes.

Only with a consistent use of protective devices and a responsible compliance of the instructions for use can you avoid malfunctions or failures of the electrostatically sensitive equipment.

Shipping

- For shipping electrostatically sensitive equipment, use **always** the original packaging.

Measurements

Observe the following notes for measurements on electrostatically sensitive equipment:

- Discharge potential-free measuring instrument briefly.
- Ground the measuring instruments used.

2.5 EMC installation guidelines

Industrial use

The CUBE20S system is an electronic device manufactured according to the current state-of-the-art standards. Both the robust mechanical construction and the design of the electronic components make it ideal for industrial use.

To guarantee a trouble-free operation, observe the following rules when installing the device in systems. Otherwise, the high interference immunity and resistance to damage of the device may become partially ineffective.

The interference immunity of the entire system considerably depends on the correct installation, location and wiring.

1 | For safe operation, check the installation regulations stipulated by the manufacturer of the controller.

2 | Bring them in line with the recommendations for an EMC-compatible design.

3 | Then install CUBE20S system.

2.6 Notes on spare parts and accessories

Spare parts

- Only use the original spare parts or spare parts by other manufacturers expressly authorized by Murrelektronik GmbH.
- Check the function of the device after having replaced a component.

Accessories

- The use of accessories may alter the device function. Use only accessories authorized by Murrelektronik GmbH.
- Observe the enclosed instructions of the accessories when installing them.

2.7 Environmentally friendly disposal

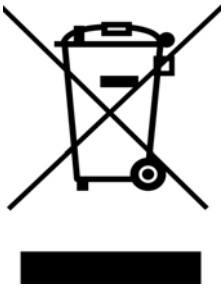

Disposal

Do not throw electrical devices, batteries or accumulators in the domestic waste!

If you want to dispose of the product, it may be returned free of charge to Murrelektronik GmbH. This is also valid for original packaging and batteries or accumulators.

Return

➔ Label the product and the packaging with ***"For disposal***".

➔ Pack the product.

➔ Send the package to:

Murrelektronik GmbH

Falkenstraße 3

D-71570 Oppenweiler

We ensure that it is disposed of according to the German legislation. Transport to the place of destination is at the expense of the last owner.

2.8 EC Declaration of Conformity

CE

Murrelektronik GmbH herewith declares that the products and systems comply with the basic requirements and other relevant regulations of the following Directives:

- 2004/108/EC Electromagnetic compatibility
- 2011/65/EU RoHS

2.9 Warranty and liability

Warranty and liability claims

Warranty and liability claims shall be lost if

- the product is not used according to its designated use,
- damage is caused because the manual and the operating instructions have not been observed,
- the staff was/is not qualified.

3 System description

3.1 System

Overview

The Cube20S system is a modular automation system mounted on a 35 mm DIN rail. Using 2, 4 and 8-channel expansion modules, you may adapt this system perfectly to your automation tasks.

You do not need much wiring because the 24 V DC power supply is integrated in the backplane bus. Defective electronic modules can be replaced without having to replace the wiring.

Using power modules with different colors, you may define further voltage ranges for the 24 V DC power supply within the system or add 2 A to the electronic supply.

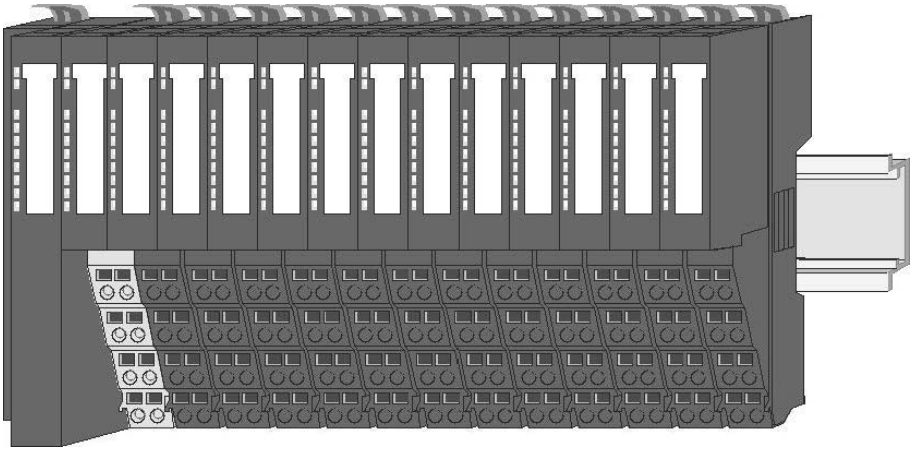

Fig. 3-1: Cube20S system

Components

The Cube20S system consists of the following components:

- Bus node
- Expansion modules
- Power modules
- Accessories

Bus node

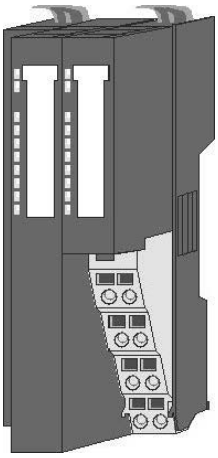

Bus interface and power module of the bus node are incorporated in one housing. The bus interface is used to connect to a parent bus system.

Both bus interface and the electronics of the connected expansion modules are supplied with power over the power module.

There is another connection on the power module for the 24 V DC power supply of the connected expansion modules.

By installing up to 64 expansion modules on the bus node, they will be electrically connected, i.e.

- they are incorporated in the backplane bus,
- the electronic modules are supplied with power,
- each expansion module is connected to the 24 V DC power supply.

Bus cover

Each bus node has a cover to protect the contacts.

➔ Remove the cover on the bus node before installing CUBE20S modules.

➔ To protect the contacts, mount the bus cover on the outmost module.

Expansion modules

Each expansion module consists of a terminal and an electronic module.

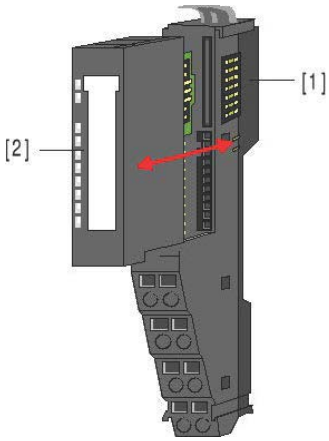

1 Terminal module

2 Electronic module

Terminal module

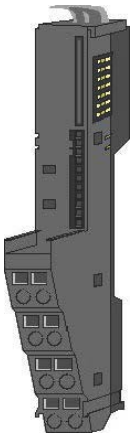

The terminal module consists of the following functional elements:

- a sliding mechanism to fasten the electronic module,
- the backplane bus with power supply for the electronics,
- the connection to the 24 V DC power supply,
- the staircase-shaped terminal block for wiring,
- a safe locking system for fastening on a mounting rail.

This locking mechanism allows you to mount your Cube20S system outside the switch cabinet and fix the complete system later in the switch cabinet.

Electronic module

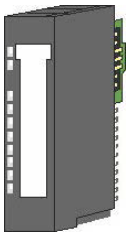

The functionality of an expansion module is defined over the electronic module.

- If the electronic module is defective, it can be replaced while wiring is kept.
- On its front, there are LEDs indicating the status.
- For an easier wiring, there are wiring diagrams on the front and side of each electronic module.

Power modules

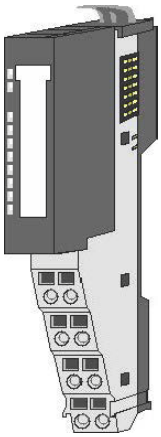

Power modules provide the Cube20S system with power. The power modules are either integrated in the bus node or may be plugged between the expansion module.

Depending on the type of power module, groups of potential can be defined for the 24 V DC power supply, or the electronics supply may be extended by 2 A.

For a better recognition, the power modules have a different color than the expansion modules.

3.2 Dimensions

Dimensions of the bus node

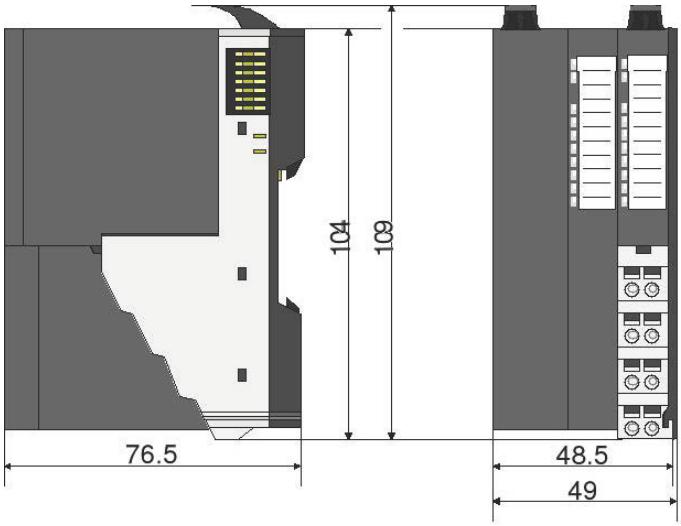

Fig. 3-2: Dimensions of the bus node

Dimensions of the expansion module

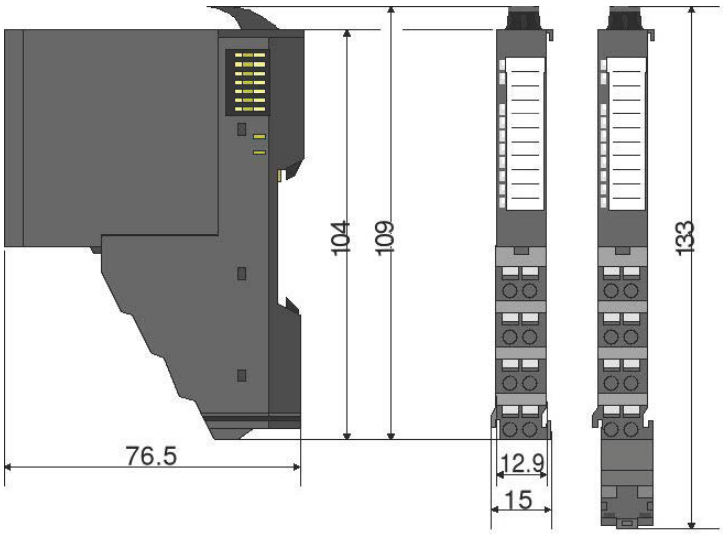

Fig. 3-3: Dimensions of the expansion module

Dimensions of the electronic module

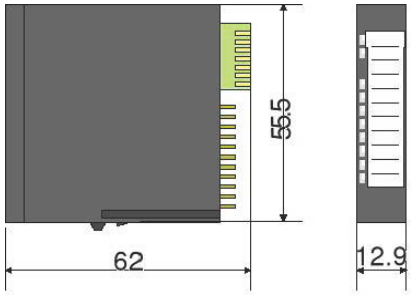

Fig. 3-4: Dimensions of the electronic module

3.3 Mounting

NOTE
You can mount the modules individually or as a whole block on the DIN rail. For block installation, please observe the following: **All** locking levers must be open.

3.3.1 General notes

The individual modules are mounted directly on a DIN rail. Electronics and power supply are connected over the backplane bus.

Conditions:

- Max. number of plug-in modules: 64
- Max. total current of the electronics supply: 3 A

A **power module sensor/actuator/bus art. no. 57131** extends the current for the electronics supply by 2 A. For details, refer to section 3.5 "Wiring".

3.3.2 Functional principle of the locking

Inserting and locking the module

The terminal module has a locking lever at its top.

1 | For installation and disassembly, please press this lever upwards until it engages audibly.

2 | Plug the module to be mounted in the previously plugged-in module.

3 | Slide the module with the help of the guide strips at top and bottom onto the DIN rail.

4 | Flap the locking lever downwards.

The module is fastened to the DIN rail.

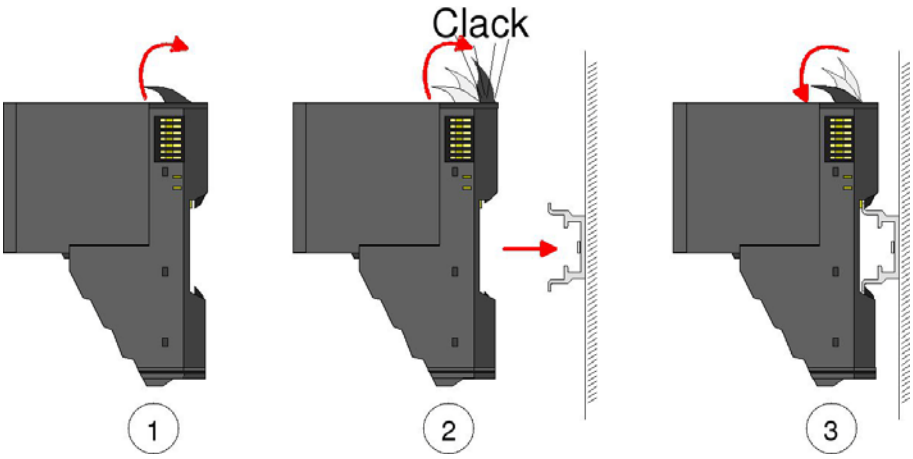

Fig. 3-5: Installing the module

3.3.3 Replacing an electronic module

Disassembly

✓ The electronic module has a locking lever at the bottom.

1 | Press the locking lever upwards for disassembly.

2 | To remove the electronic module, pull it out towards the front.

The electronic module has been removed.

Installation

✓ The electronic module has a locking lever at the bottom.

➔ Slide the electronic module with the help of the guide strip into the terminal module.

The electronic module engages audibly at the bottom.

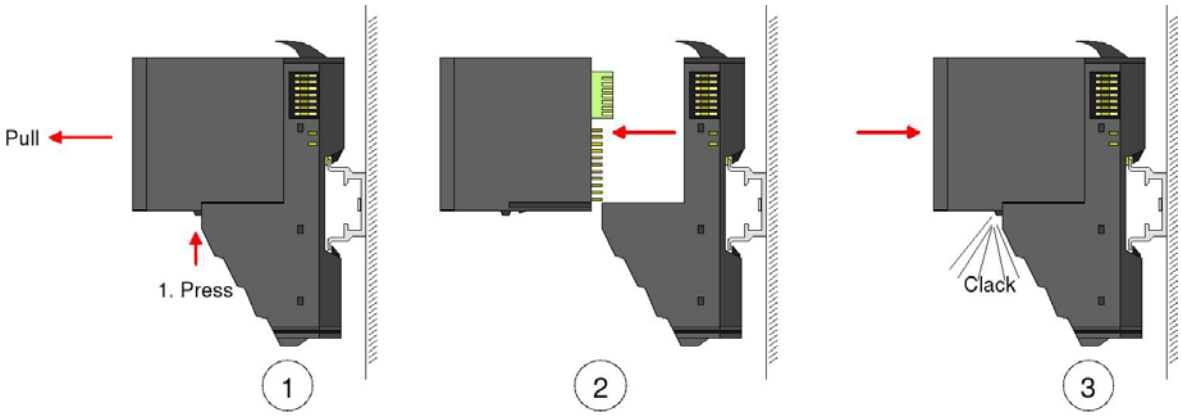

Fig. 3-6: Disassembling and installing the electronic module

3.3.4 Installing the DIN rail

➔ Install the DIN rail with the necessary distances (see Fig. 3-7: "Installation distances").

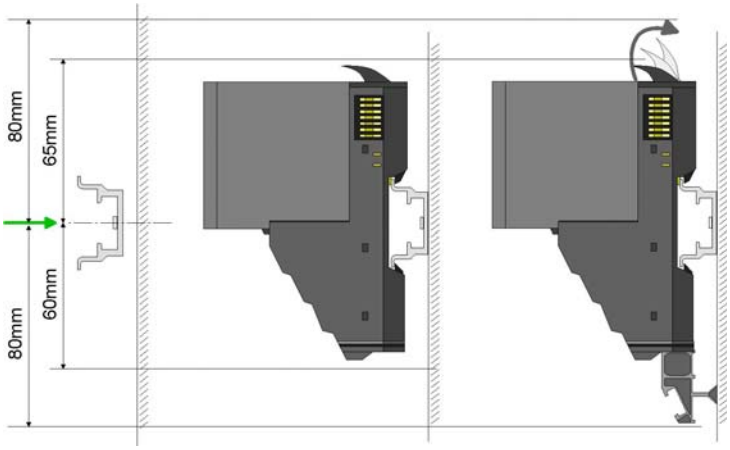

Fig. 3-7: Installation distances

3.3.5 Installing the bus node

✓ To mount the system, start on the left with the bus node.

1 | Flap the two locking levers of the bus node upwards.

2 | Plug the bus node in the DIN rail.

3 | Flap the two locking levers of the bus node downwards.

4 | To remove the right bus cover, pull it out towards the front.

5 | Store the bus cover to use it as termination of the system.

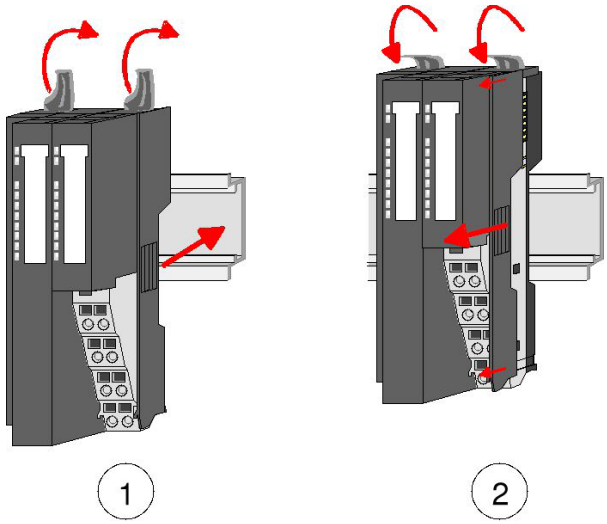

Fig. 3-8: Installing the bus node

3.3.6 Installing the expansion modules

1 | Flap the locking lever of the expansion module upwards.
2 | Plug the expansion module in the DIN rail.
3 | Push the expansion module towards the bus node or the last expansion module.
4 | Flap the locking lever of the expansion module downwards.
5 | Mount all expansion modules as described.

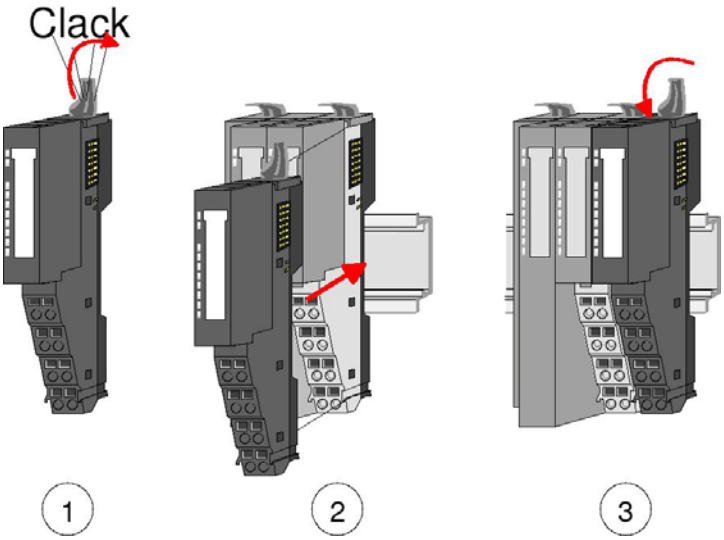

Fig. 3-9: Installing the expansion module

3.3.7 Installing the bus cover

✓ Prerequisite: The system has been completely mounted.

➔ Plug the bus cover in the outmost module as a protection of the bus contacts.

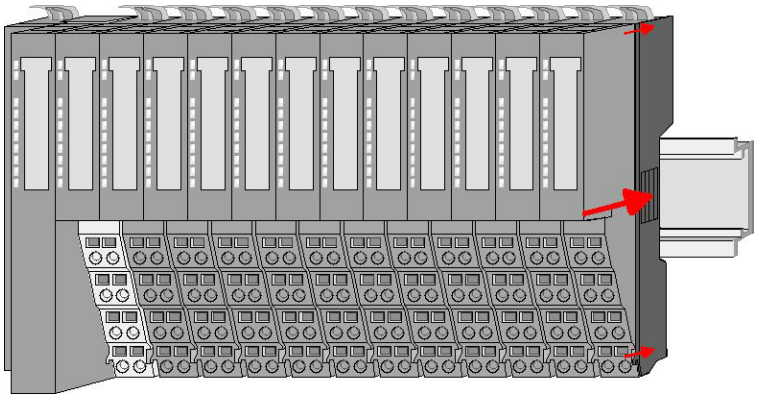

Fig. 3-10: Installing the bus cover

3.4 Disassembling and replacing modules

3.4.1 Procedure

During disassembly or when replacing a module or module group, please observe the following:

1 | Remove the electronic module to the right of the module or module group.
2 | Dismount/replace the module or module group.
3 | Plug in the electronic module.

3.4.2 Replacing an electronic module

Disassembly

✓ The electronic module has a locking lever at the bottom.
1 | Press the locking lever upwards for disassembly.
2 | To remove the electronic module, pull it out towards the front.

The electronic module has been removed.

Installation

✓ The electronic module has a locking lever at the bottom.
➔ Slide the electronic module with the help of the guide strip into the terminal module.

The electronic module engages audibly at the bottom.

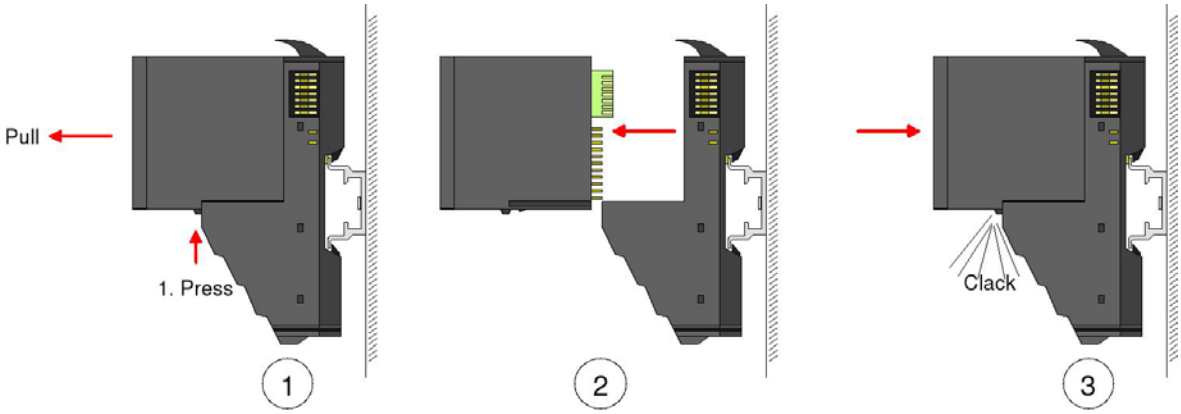

Fig. 3-11: Disassembling and installing the electronic module

3.4.3 Replacing a module

Dismounting

1 | Remove the wiring from the module, if any. For details refer to section ***Wiring***.
2 | Unlock the electronic module to its right at the bottom.
3 | To remove the electronic module, pull it out towards the front.
4 | Flap the locking lever of the module to be replaced upwards.
5 | To remove the module, pull it out towards the front.

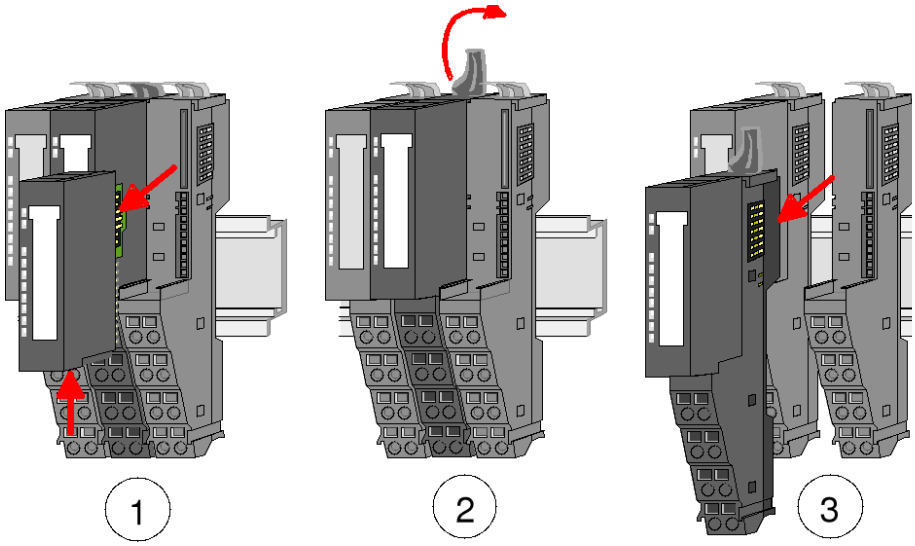

Fig. 3-12: Disassembling a module

Installing the new module

1 | Flap the locking lever of the module upwards.

2 | Plug the module in the gap between the modules.

3 | Slide the module with the help of the guide strips at both sides onto the DIN rail.

4 | Flap the locking lever of the module downwards.

5 | Plug in the electronic module.

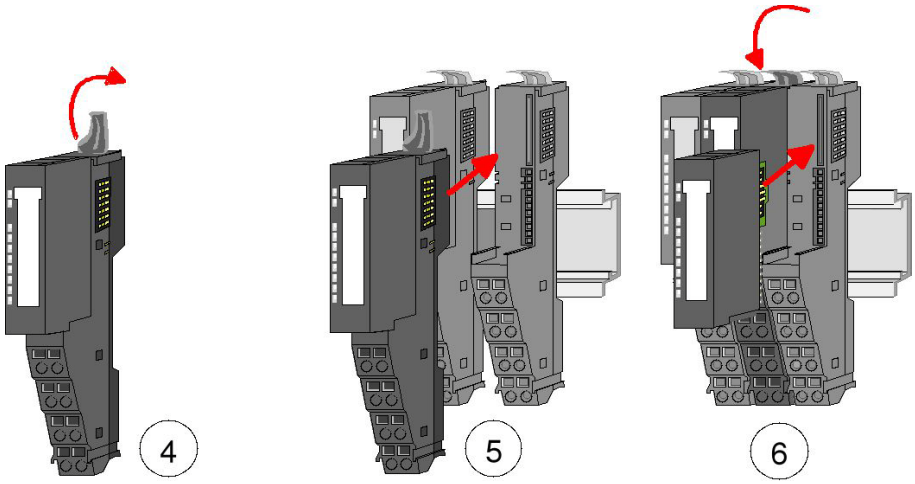

Fig. 3-13: Installing the new module

3.4.4 Replacing a bus node

Disassembly

CAUTION!

Power module and bus interface belong together!

If separated, the modules get destroyed.

➔ Do not separate power module and bus interface!

1 | Remove the wiring from the bus node, if any. For details, please see section ***Wiring***.
2 | Unlock the electronic module to its right at the bottom.
3 | To remove the electronic module, pull it out towards the front.
4 | Flap the locking lever of the bus node upwards.
5 | To remove the bus node, pull it out towards the front.

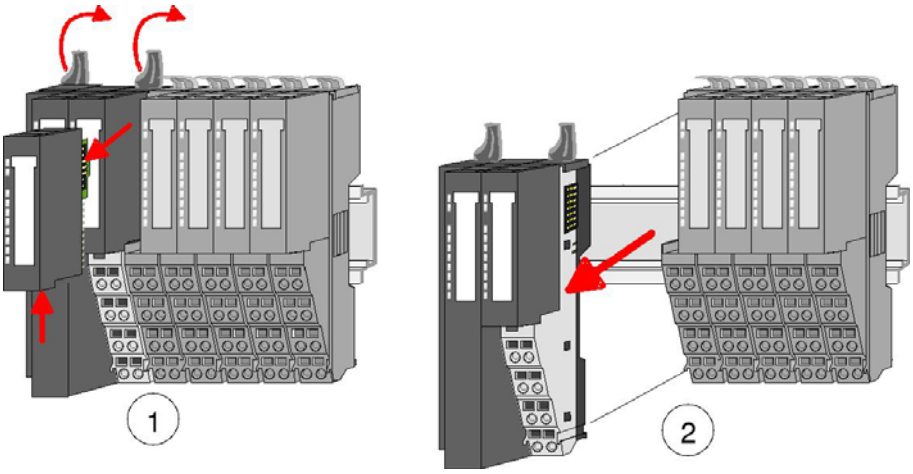

Fig. 3-14: Disassembling the bus node

Installing the new bus node

1 | Flap the locking levers of the bus node upwards.
2 | Plug the bus node in the left module.
3 | Slide the bus node with the help of the guide strips onto the DIN rail.
4 | Flap the locking levers downwards.
5 | Plug in the electronic module.

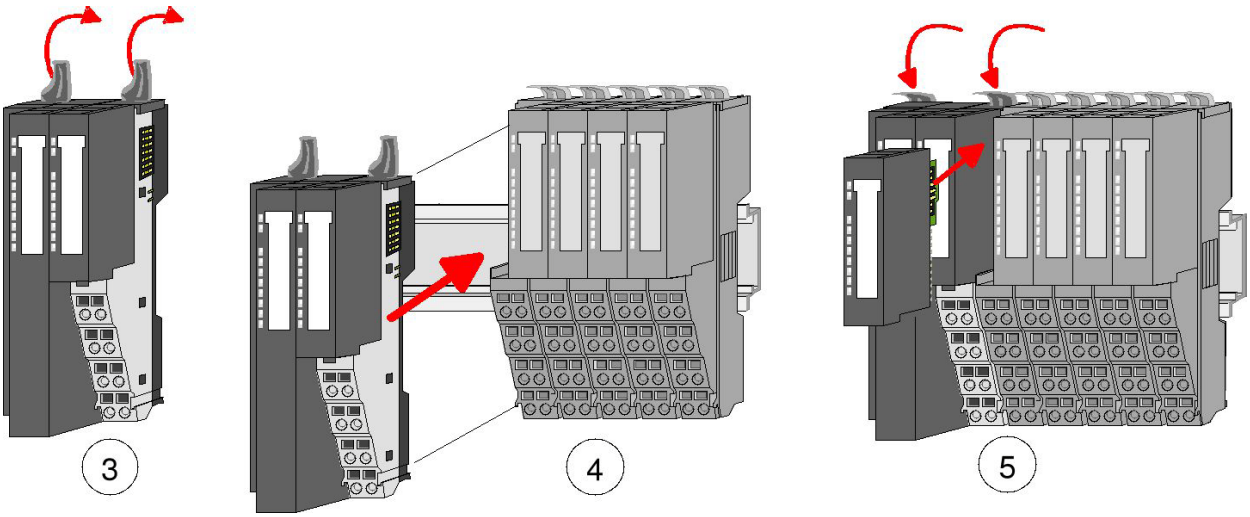

Fig. 3-15: Installing the new bus node

3.4.5 Replacing a module group

Disassembly

1 | Remove the wiring from the module group, if any. For details, please see section ***Wiring***.
2 | Unlock the electronic module to its right at the bottom.
3 | To remove the electronic module, pull it out towards the front.

4 | Flap the locking levers of the module group upwards.

5 | To remove the module group, pull it out towards the front.

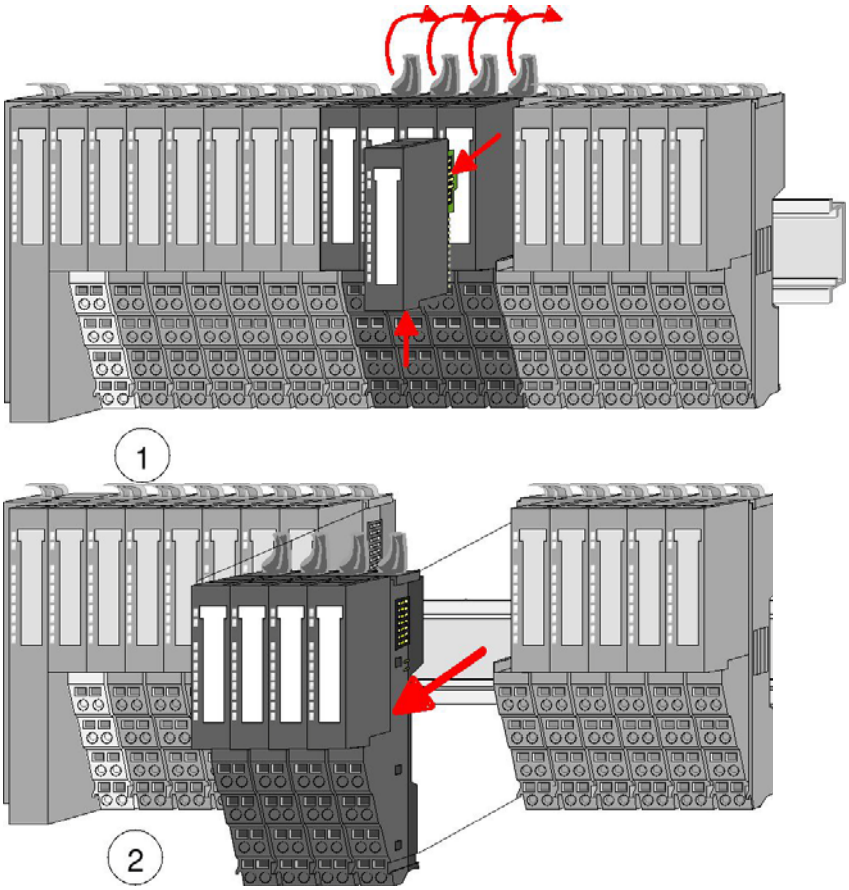

Fig. 3-16: Disassembling the module group

Installing the new module group

1 | Flap the locking levers of the module group upwards.

2 | Plug the module group in the gap between the modules.

3 | Slide the module group with the help of the guide strips at both sides onto the DIN rail.

4 | Flap the locking levers of the module group downwards.

5 | Plug in the electronic module.

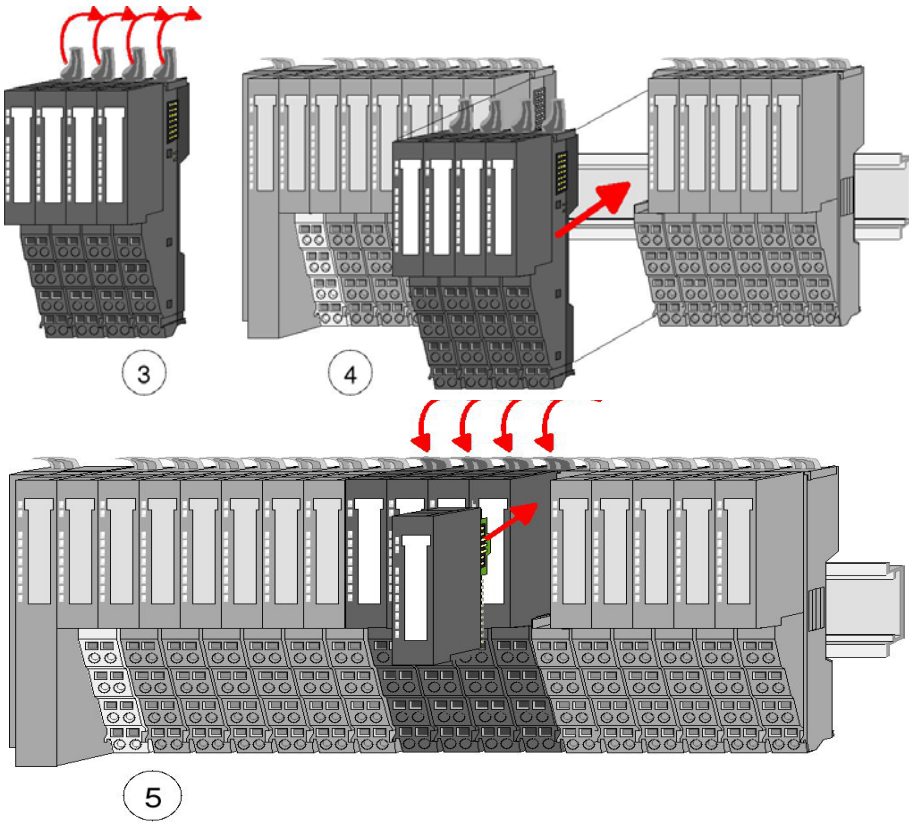

Fig. 3-17: Mounting of the module group

3.5 Wiring

3.5.1 Spring terminals

Terminals

Spring terminals are used for wiring. Spring terminals allow you to connect the signaling lines and power cables fast and easily. This type of connection is resistent to vibrations.

Cable data

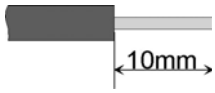

$U_{max.}$: 240 V AC / 30 V DC
$I_{max.}$: 10 A
Cross section: 0.08 ... 1.5 mm^2 (AWG 28 ... 16)
Stripping length: 10 mm

3.5.2 Procedure

Wiring

Tools: suitable screwdriver

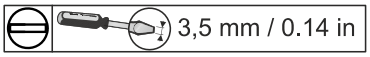

Wire cross-section: 0.08 mm^2 ... 1.5 mm^2 (AWG 28 ... 16)

1 | Put the screwdriver slightly inclined in the rectangular opening (Fig. 3-18: 1).

2 | Press and hold the screwdriver away from the round opening. The contact spring is open (Fig. 3-18: 2).

3 | Put the stripped wire in the round opening (Fig. 3-18: 2).

4 | Remove the screwdriver (Fig. 3-18: 3).

The wire is securely connected with the terminal by means of a spring contact.

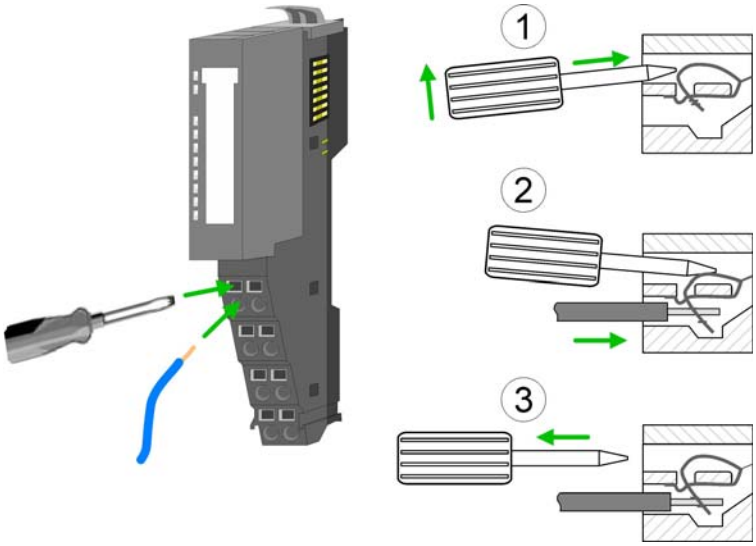

Fig. 3-18: Spring terminals

3.5.3 Standard wiring

Standard wiring

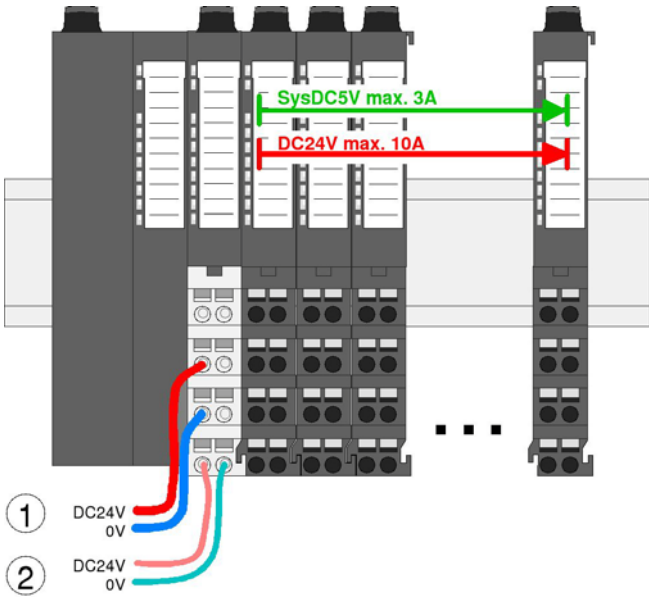

Fig. 3-19: Standard wiring

1 24 V DC for power supply of I/O level (max. 10 A)

2 24 V DC for electronics supply, bus node and I/O level

3.5.4 Fuse protection

WARNING!

The power supply is not protected internally.

It can get destroyed by too high currents.

➔ Protect the power supply externally using a fuse or line circuit breaker!

NOTE

The electronics supply is internally protected against too high voltages by means of a fuse. The fuse is located inside the power module. After the fuse has tripped, the electronic module has to be replaced!

External fuse

To protect the power supply, Murrelektronik provides a number of circuit breakers. They can be found under the product name ***MICO*** on the internet www.murrelektronik.com.

3.5.5 Using power modules

Status of the electronics power supply

After switching on Cube20S, the RUN or MF LED lights up at every module.

If the total current for the electronics supply exceeds 3 A, the LEDs are not activated. In this case, plug in the power module, art. no. 57130, between the expansion modules.

NOTE
To guarantee power supply, the power modules can be used in any combination.

Power module art. no. 57130

Use this power module if

- 10 A are not longer enough for power supply
- you want to have groups of different potentials

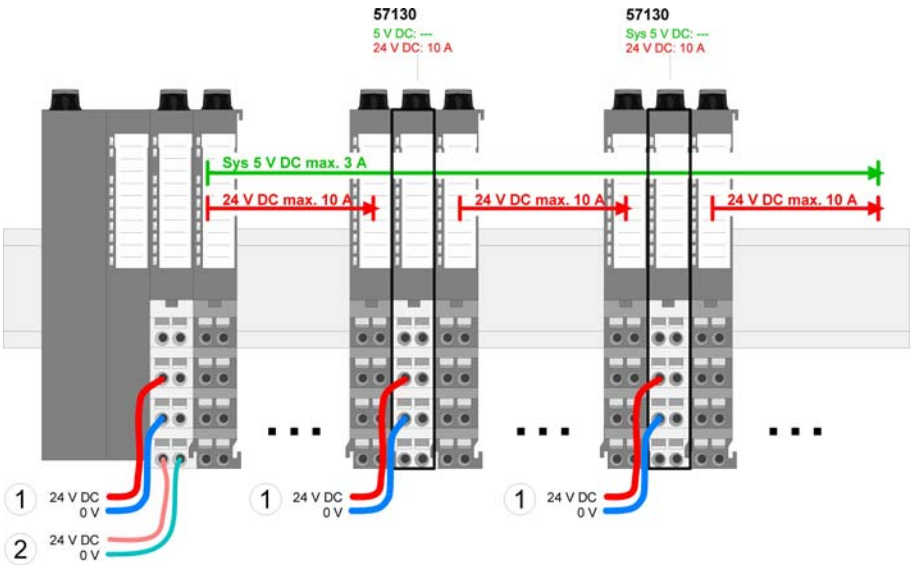

Fig. 3-20: Power module art. no. 57130

1 24 V DC for power supply of I/O level (max. 10 A)

2 24 V DC for electronics supply, bus node and I/O level

Power module art. no. 57131

Use this power module if 3 A are not enough for electronics supply on backplane bus.

In addition, you will have a new group of potential for 24 V DC power supply with max. 4 A.

Using a power module, you can plug in modules with a maximum total current of 2 A in the following backplane bus. Then you have to plug in another power module.

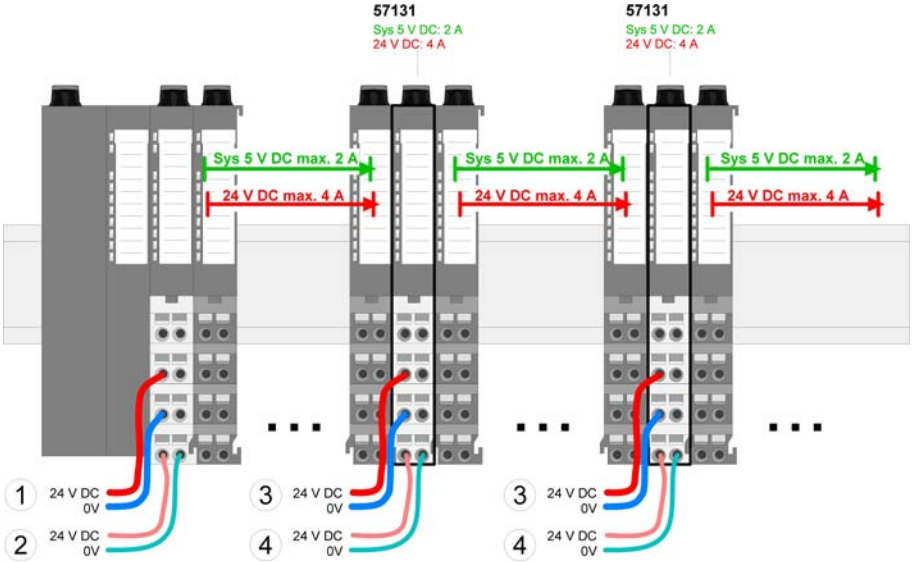

Fig. 3-21: Power module art. no. 57131

1 24 V DC for power supply of I/O level (max. 10 A)

2 24 V DC for electronics supply, bus node and I/O level

3 24 V DC for power supply of I/O level (max. 4 A)

4 24 V DC for electronics supply, I/O level

3.5.6 Fixing the shield

Fixing the shield

NOTE
Shield bus carriers are required for installing a shield (see **Accessories**).

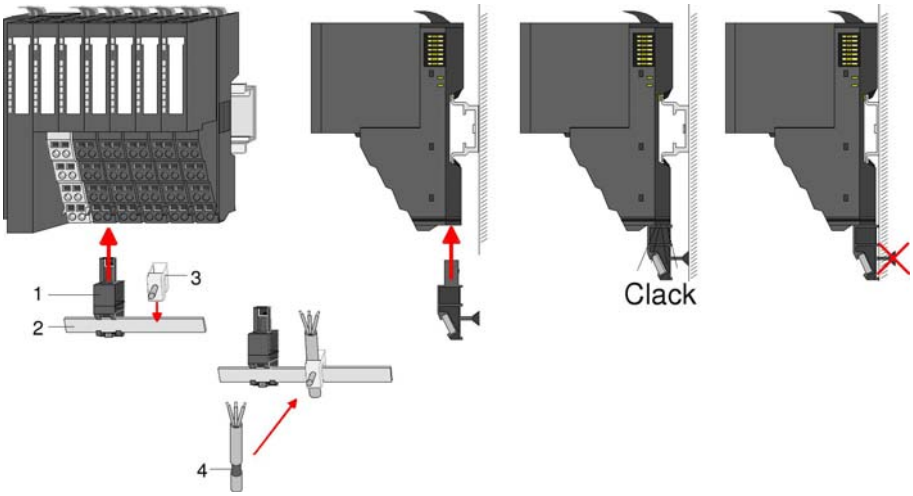

Fig. 3-22: Fixing the shield

1 Shield bus carrier
2 Shield bus (10 mm x 3 mm)
3 Shield terminal block
4 Shielding

Fixing the shielding

✓ The shield bus carrier and the shield bus have been plugged in.
➔ Fasten the lines with the stripped shield.
➔ Connect the shield terminal blocks to the shield bus.

3.6 Troubleshooting - LEDs

General information

Each module has two LEDs on the front: **RUN** and **MF**. These LEDs allow you to detect errors in your system or faulty modules.

Designation	Indication	LED status
RUN LED		off
		green
		flashing green
MF LED		off
		red
		flashing red

Tab. 3-1: Status indications of the LEDs

Total current of electronics supply exceeded

Reaction of the LEDs after switching on:	The **RUN LEDs** of all modules are off. The **MF LEDs** are only lighted on some modules.
Cause:	The total current for electronics supply exceeds the maximum current.
Remedy:	Plug in the power module art. no. 57131. For details, please see section ***Wiring***.

Configuration error

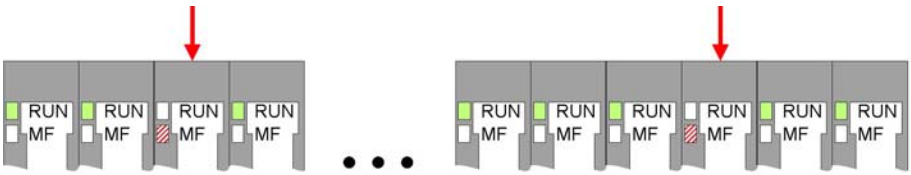

Reaction of the LEDs after switching on:	The **RUN LEDs** are off on one or several modules. The **MF LEDs** are flashing on these modules.
Cause:	The module on which the **MF LED** is flashing, does not match the current configuration.
Remedy:	Match configuration and hardware structure.

Module failure

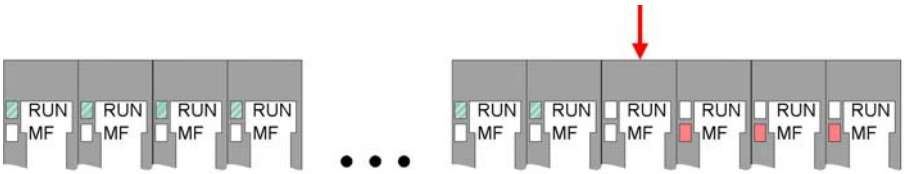

Reaction of the LEDs after switching on:	The **RUN LEDs** are flashing up to the module to the left of the defective module. On the following modules, the **RUN LED** is off. The **MF LEDs** are off up to the module to the left of the defective module. On the following modules, the **MF LED**is lit.
Cause:	The module to the right of the flashing modules is defective.
Remedy:	Replace the defective module.

4 Art. no. 57108, ModbusTCP slave, bus node

4.1 Features

Features

- Ethernet bus node with ModbusTCPprotocol
- ModbusTCP for max. 64 peripheral modules
- I/O access: max. 8 stations
- Online parameter setting using the integrated web server
- RJ45 socket: 100BaseTX, 10BaseTX
- Automatic polarity and speed recognition (auto negotiation)
- Automatic recognition of parallel or crossed cables (auto crossover)
- Network LEDs for ***Link/activity and speed***
- Status LEDs for ***Ready*** and ***Error***

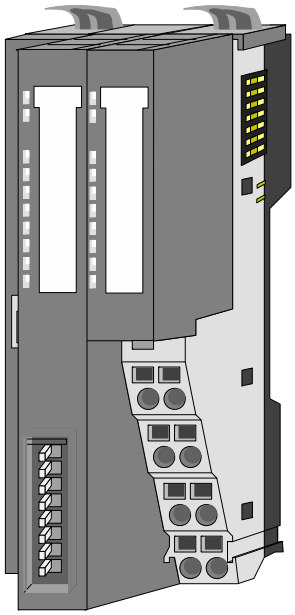

Fig. 4-1: Ethernet bus node with ModbusTCPprotocol, art. no. 57108

Order data

Type	Art. no.	Description
Cube20S bus node	57108	Cube20S Ethernet bus node with Modbus TCP protocol

4.2 Design

57108

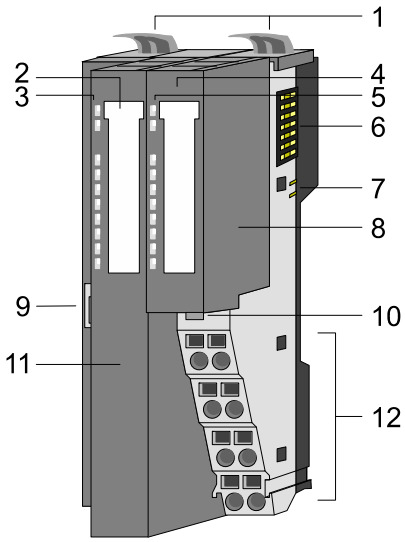

Fig. 4-2: Structure of Ethernet bus node with Modbus TCP protocol

1 Locking lever of terminal module
2 Labeling strips for bus interface
3 LED status indication of bus interface
4 Labeling strip for power module
5 LED status indication of power module
6 Backplane bus
7 24 V DC power supply
8 Power module
9 Ethernet socket for bus interface
10 Power module unlocking
11 Bus interface
12 Terminal

Status indication of bus interface

There are 6 LEDs on the front for fast diagnostics of the current module status.

Display	LED	Color	Status	Description	
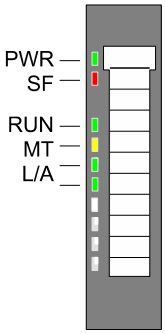	PWR	green	on		Bus interface is supplied with power
	SF	red	on		Station error, error on Modbus TCP or on CUBE20S bus
	RUN	green	on		Ethernet bus node status
	MT	yellow	on		Ethernet bus node is being localized
	L/A	green	on		Link/activity: Ethernet is physically linked
			flashing		Bus activity over Ethernet
	SPD	green	on		Speed: 100 Mbit/s
			off		Speed: 10 Mbit/s

Tab. 4-1: Status indication of bus interface

For further information about LEDs, refer to the section 3.6, Seite 29.

Power module status indicator

Display	LED	Color	Status	Description	
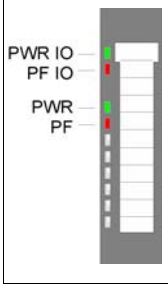	PWR IO	Green	on		Power supply OK
	PF IO	red	on		Fuse of power supply defective (power fail) (see 3.5.4 "Fuse protection")
	PWR	Green	on		Electronics supply OK
	PF	red	on		Fuse of electronics supply defective (see 3.5.4 "Fuse protection")

Tab. 4-2: Power module status indicator

Terminal

Connect the wires with a cross section of 0.08 mm^2 (AWG 28) to 1.5 mm^2 (AWG 16).

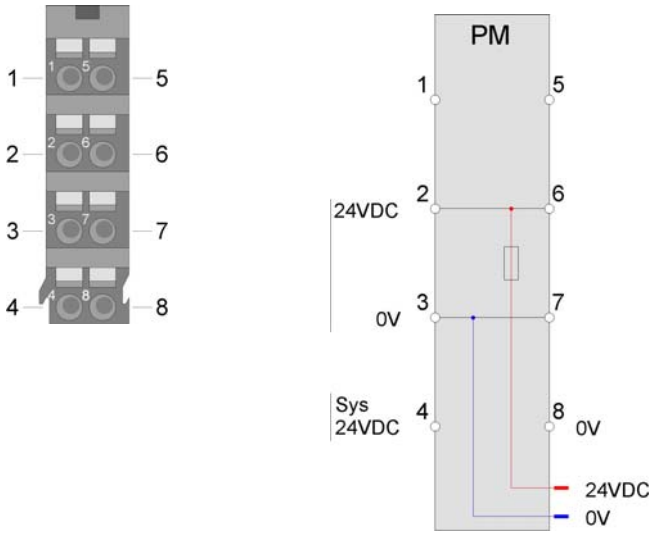

Pos.	Function	Type	Description
1	---	---	not used
2	24 V DC	Input	24 V DC for power supply
3	0 V	Input	GND for power supply
4	Sys 24 V DC	Input	24 V DC for electronics supply
5	---	---	not used
6	24 V DC	Input	24 V DC for power supply
7	0 V	Input	GND for power supply
8	Sys 0 V	Input	GND for electronics supply

Tab. 4-3: Terminal assignment

Bus interface

An 8-pole RJ45 socket is integrated in the bus interface.

Assignment of the RJ45 socket

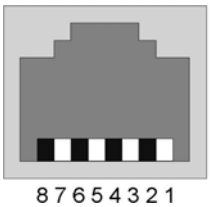

Pos.	Assignment	Pos.	Assignment
1	Transmit +	5	-
2	Transmit -	6	Receive -
3	Receive +	7	-
4	-	8	-

Tab. 4-4: Assignment of the RJ45 socket

5 Modbus TCP bus node

5.1 Basics

General information

The Ethernet bus node is a slave system. Slave systems are "data collectors" that provide I/O data of the connected modules to the requesting master. The slave system is called server, and the master is called client.

Modbus TCP uses the ***Transport Control Protocol*** (***TCP***) to transfer the Modbus application protocol during data transfer in Ethernet TCP/IP networks.

The Ethernet bus node by Murrelektronik allows you to connect up to 64 Cube20S modules via Ethernet. Up to 8 clients can communicate simultaneously with the Ethernet bus node.

Automatic address mapping

After switching on, the Ethernet bus node identifies the modules connected via the backplane bus and includes them in the address range. There is a range for input data and a range for output data for address mapping.

You have access to the current mapping over the web server. This is where you can set the parameters for your modules.

Communication

The Ethernet bus node is connected to the expansion modules over the backplane bus. It collects data of the input modules and, being the ***server*** (slave), provides it to a parent ***client*** (master system).

The communication happens via TCP/IP with leading Modbus TCP protocol. On the other hand, the Ethernet bus node receives data addressed to it by means of IP address and port and sends it to its output modules.

Protocols

A set of rules or standards for communication is defined in the protocols. A generally accepted module for standardization of the entire computer communication is the so-called ISO/OSI layer model. This model is based on seven layers with guidelines that regulate the use of hardware and software.

Layer	Function	Protocol
7	Application layer	Modbus TCP
6	Presentation layer	
5	Session layer	
4	Transport layer	TCP
3	Network layer	IP
2	Data link layer	
1	Physical layer	

Tab. 5-1: ISO/OSI layer model

Telegram structure

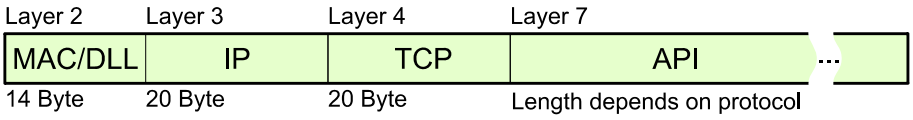

MAC	**M**edium **A**ccess **C**ontrol	Medium access control
DLL	**D**ata **L**ink **L**ayer	Data link layer
IP	**I**nternet **P**rotocol ()	Internet protocol
TCP	**T**ransmission **C**ontrol **P**rotocol	Transmission control protocol
API	**A**pplication **P**rogramming **I**nterface Length depends on protocol.	Application programming interface Length depends on protocol.

MAC/DLL

While the physical layer (layer 1) is covered by Ethernet with its standardized signal level, MAC/DLL fulfils the requirements of the data link layer (layer 2).

MAC/DLL communicates on lowest Ethernet level using MAC addresses. Each Ethernet-compatible communication partner has a unique MAC address, which may only exist once.

The MAC addresses uniquely specify source and target.

IP

IP covers the network layer (layer 3) of the ISO/OSI layer model.

IP sends data packages from one computer over several computers to the receiver. These data packages are called datagrams. IP does not guarantee the right order of the datagrams nor that they are delivered to the receiver.

To clearly distinguish between sender and receiver, 32-bit addresses (IP addresses) are used. They are normally written in four octets (exactly 8 bits), e.g. 172.16.192.11. Figures between 0 and 255 can be represented in an octet.

A part of this address specifies the network, the remaining part identifies the computer within the network. The transition between network proportion and host proportion is not fixed and depends on the size of the network.

TCP

TCP is directly on top of IP so that it covers the transport layer (layer 4) of the OSI layer model. TCP is a connection-oriented end-to-end protocol and is used for logically linking two partners.

TCP guarantees a logical and reliable data transfer.

Each datagram is provided with a 20-bytes long header that contains, among others, a sequence number for the correct order. This makes it possible that the individual datagrams in a network can reach their target using different routes.

API

API fulfils the requirements for the application layer (layer 7). This is where header and use data of the protocols are stored. In the Ethernet bus node, the ModbusTCP protocol is used. It will be explained in the following.

API structure

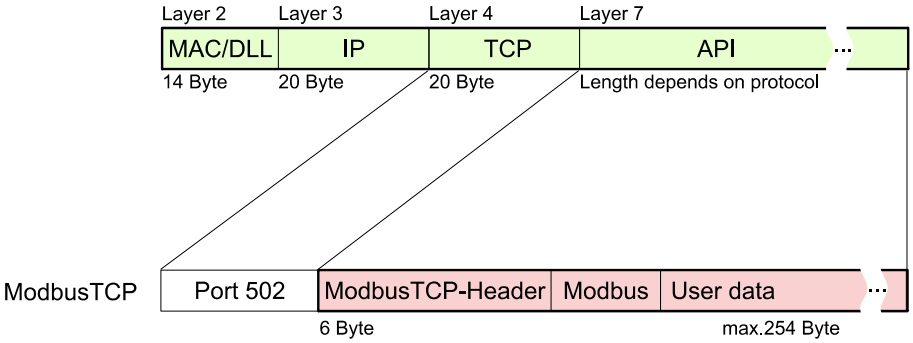

Fig. 5-1: API structure

ModbusTCP

ModbusTCP is a Modbus RTU protocol on top of TCP/IP
(RTU: Remote Terminal Unit).

Modbus protocol is a communication protocol with hierarchical structure that supports one master and several slaves. ModbusTCP extends Modbus to a client-server communication with several clients accessing one server.

Addressing is done using IP addresses. Therefore, the address embedded in the Modbus telegram is irrelevant. The CRC check sum is not required because the check is done using TCP/IP.

After a client has sent a request, it waits for the server's response until a configurable waiting time is over.

For ModbusTCP, the RTU format is used only:

Each byte is transferred as one character. Consequently, data throughput is higher than with Modbus ASCII format. The RTU time monitoring is not necessary because the header contains the length of the telegram to be received.

Data can contain bit and word information. In case of bit strings, the highest bit is sent first, i.e. it is the leftmost in a word. In case of words, the highest byte is sent first.

Function codes are used for access to a Modbus slave.
They are explained in detail further below in this chapter.

5.2 Access to the Ethernet bus node

5.2.1 Overview

Overview Fig. 5-2: shows the possibilities for access to the Ethernet bus node.

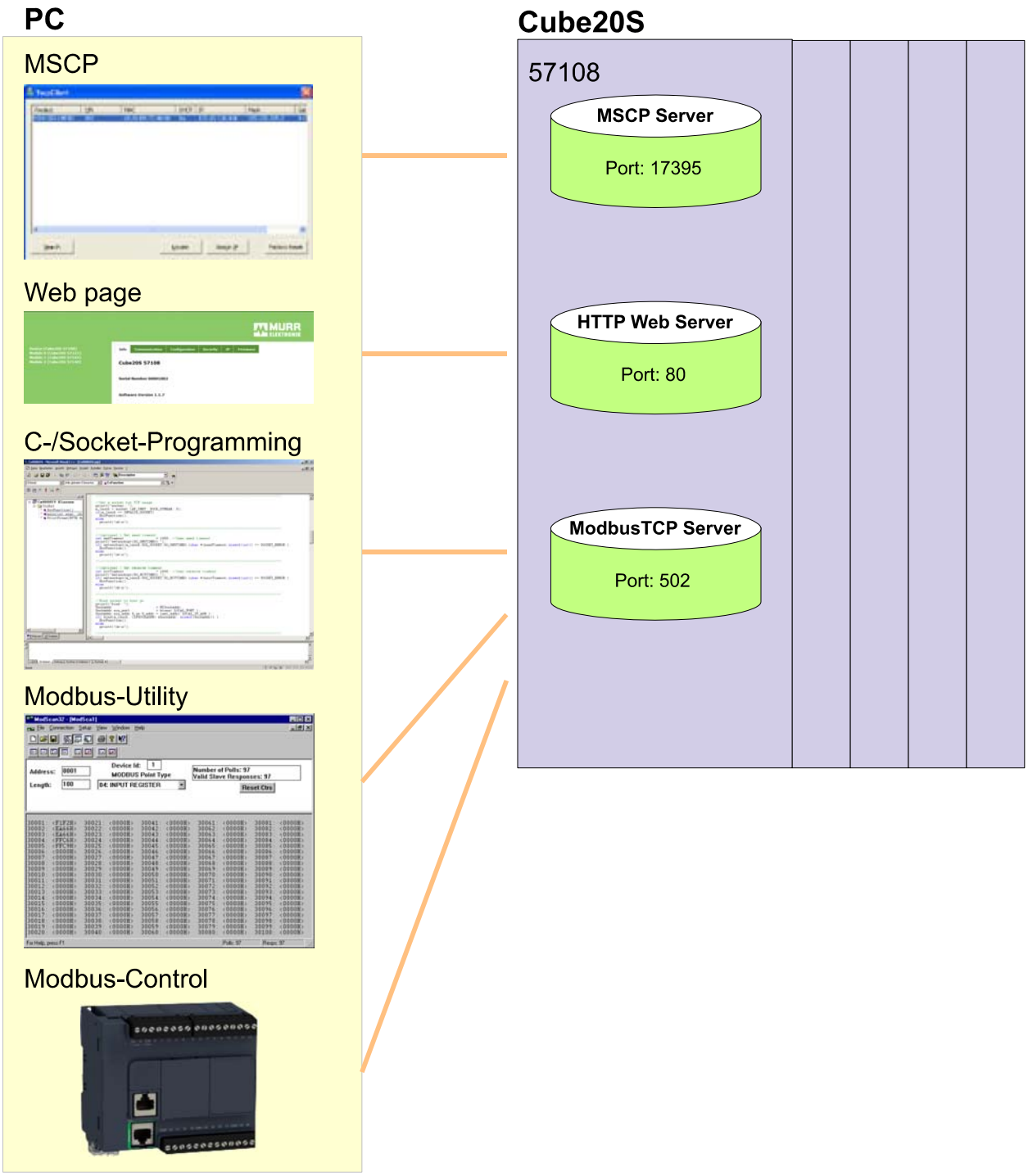

Fig. 5-2: Overview: Access to the Ethernet bus node

5.2.2 MSCP

MSCP

MSCP means **M**urrelektronik **S**earch and **C**ontrol **P**rotocol. MSCP

- identifies the Ethernet bus node in the network,
- assigns IP address data to the Ethernet bus node,
- resets the Ethernet bus node to factory settings.

Factory settings

- Password and module parameters will be deleted
- IP address: 10.0.0.1
- Subnet mask: 255.255.255.0

Loading MSCP

➔ Load MSCP from the service area at www.murrelektronik.de

➔ Execute the program.

Searching the Ethernet bus node

➔ Start a ***broadcast***.

➔ If there are several Ethernet bus nodes in the network, filter your search by specifying:

- ***Product name***
- ***Serial number***
- ***MAC address***

MSCP searches all Ethernet bus nodes in the local network and lists them.

Localizing Ethernet bus nodes

➔ Click ***Locate***.

To clearly identify it, the MT LED on the localized Ethernet bus node blinks 10 seconds.

Assigning IP addresses

➔ Request valid IP address data from your system administrator.

➔ Click the ***Assign IP*** button to assign IP address data to a listed Ethernet bus node.

Resetting the bus node to factory settings

✓ A bus node can only be reset to factory settings during localization and within 10s!

➔ Select the Ethernet bus node from the list.

➔ Click ***Locate***.

The MT LED of the desired Ethernet bus node blinks.

➔ Click ***Factory Reset*** within 10s.

MSCP resets the settings of the Ethernet bus node to the settings at the moment of delivery.

➔ If necessary, repeat these steps for further Ethernet bus nodes.

5.2.3 Web page

Web page

There are two ways to access the integrated HTTP web server of the Ethernet bus node, either using the MSCP tool or the web interface.

MSCP tool

➔ Assign valid IP address parameters to the Ethernet bus node in the MSCP tool.

Web interface

✓ Prerequisite: The communicating systems are in the same IP range.

➔ Access the Ethernet bus node with your web interface using address 10.0.0.1 (default address).

NOTE
The power and terminal modules do not have any type identification. They are not recognized by the Modbus TCP bus nodeand not considered in the list or assignment of slots.

NOTE
In the following, the slots within ModbusTCP will be called ModbusTCPslots. The numbering always starts with 0.

Web page structure

The web page is structured dynamically. It depends on the number of modules on the bus node.

Fig. 5-3: View if a bus node is selected

1 Module list: Bus node and Cube20S modules in the order they are plugged in

2 Functions for the module selected in the module list

3 Information and input field for the corresponding function

Bus node selected

Fig. 5-4: "Info" view if an Ethernet bus node is selected

If the Ethernet bus node is selected, the web server shows the following pages:

- ***Info***: The ***Info*** tab includes all data of the Ethernet bus node
  - Order number
  - Serial number
  - Firmware version
- ***Communication***
- ***Configuration***
- ***Security***
- ***IP***
- ***Firmware***

Communication

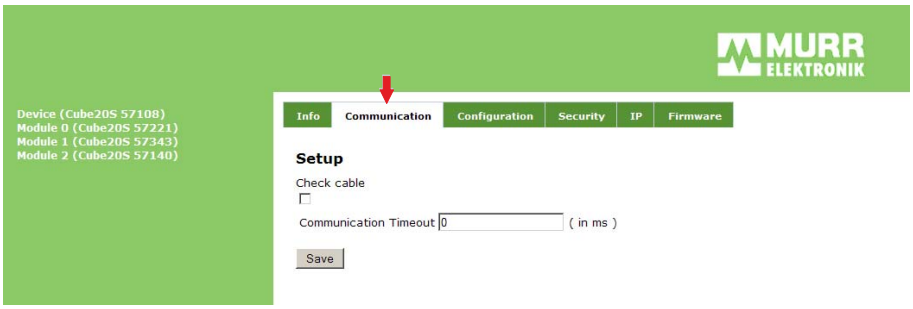

*Fig. 5-5: **Communication** view if a bus node is selected*

Monitoring the Ethernet line

➔ Tick the ***Check cable*** check box.

When the Ethernet cable is pulled:
- the bus node ends communication,
- disables all modules (BASP enabled)
- and shows this by means of the blinking RUN LED.

Entering the timeout value in [ms] for Ethernet communication

➔ Enter a value in the ***Communication timeout*** field.

➔ Click ***Save***.

If the waiting time of the bus node exceeds the set timeout value,
- the bus node ends communication,
- disables all modules (BASP enabled)
- and shows this by means of the blinking RUN LED.

Configuration

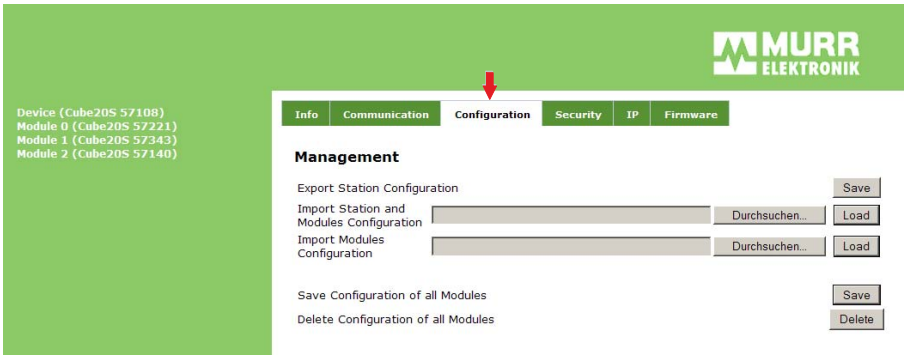

*Fig. 5-6: **Configuration** view if an Ethernet bus node is selected*

Only if there is a configuration for a module can it be used for comparing the nominal and actual structure.

Problem	System behavior	Message on web page	Solution
Nominal and actual structure differ.	System does not change to RUN.	Error	Delete existing configuration. Restart the system.
Module is not configured and actual structure is changed at runtime	System does not change to RUN.	Error	Automatic restart by Ethernet bus node. System changes to RUN.
Current module ID differs from configured module ID.	System does not change to RUN.	Error	Delete existing configuration. Restart the system.

Tab. 5-2: Solutions for differing configuration

Each module has its unique identification number: the module ID. If module parameters are set, the ID of this module is shown in the module configuration.

Save or delete the current module configuration on the ***Configuration*** tab or import an existing one.

Exporting

➔ In the ***Export Station Configuration*** line, click ***Save***.

A window with the configuration in XML format opens.

➔ Select ***File > Save as***.

The program saves the configuration as XML file.

Importing the configuration of Ethernet bus node and modules

➔ In the ***Import Station and Modules Configuration*** line, click ***Durchsuchen...*** (= Browse).

➔ Select the desired configuration file.

➔ Click ***Load***.

The program loads the configuration of Ethernet bus node and modules.

Importing the configuration of modules

➔ In the ***Import Modules Configuration*** line, click ***Durchsuchen...*** (= Browse).

➔ Select the desired configuration file.

➔ Click ***Load***.

The program loads the configuration of the modules. The parameters of the Ethernet bus node will be kept.

Saving an existing configuration

➔ In the ***Save Configuration of all Modules*** line, click ***Save***.

➔ Select the desired configuration file.

➔ Click ***Load***.

The program saves the current configuration.

Deleting the existing configuration

➔ In the ***Delete Configuration of all Modules*** line, click ***Delete***.

The program deletes the current configuration.

Security

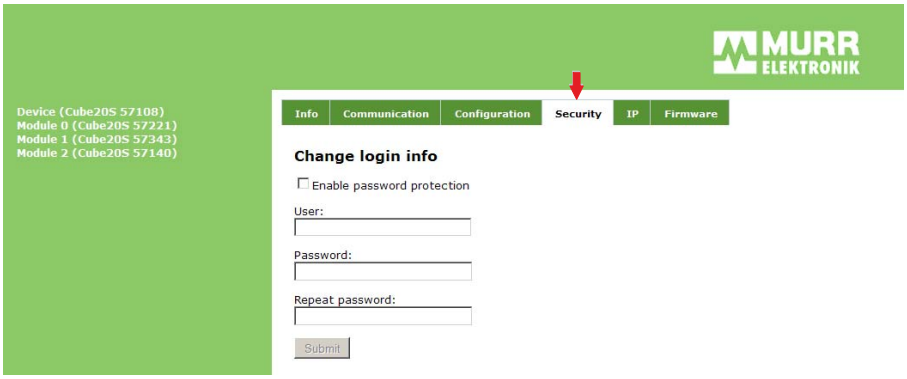

*Fig. 5-7: **Security** view if a bus node is selected*

On the ***Security*** tab, store a password for all functions with write access to the bus node.

Enabling the password query

- ➔ Tick the ***Enable password protection*** check box.
- ➔ Enter a user name.
- ➔ Enter a password.
- ➔ Repeat the password.
- ➔ Click ***Submit***.

The password has been saved.

IP

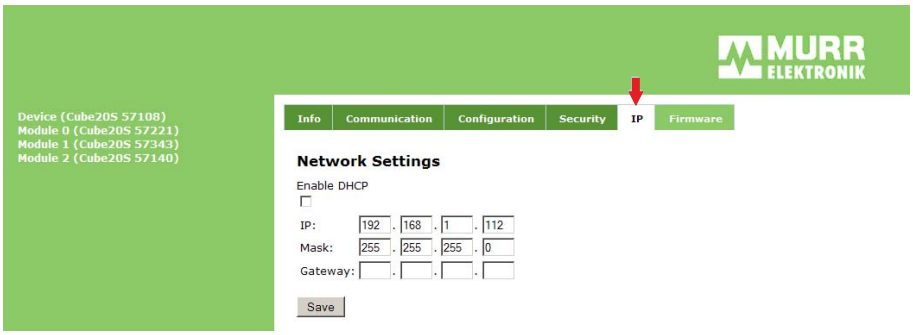

Fig. 5-8: "IP" view if an Ethernet bus node is selected

Specify the IP address data for the Ethernet bus node.

- ➔ Request valid IP address data from your system administrator.
- ➔ Enter valid IP address data.

Factory settings

- IP address (IP): 10.0.0.1
- Subnet mask (Mask): 255.255.255.0
- Gateway: none

Firmware

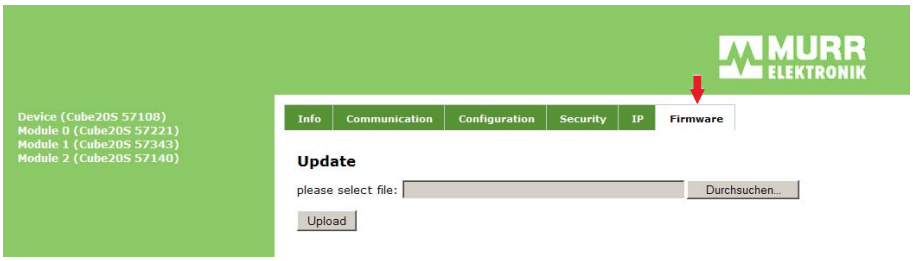

*Fig. 5-9: **Firmware** view if an Ethernet bus node is selected*

Updating firmware

- ➔ Download a new firmware file from our web page www.murrelektronik.com.
- ➔ Click ***Durchsuchen...*** (= browse) and highlight the firmware file.
- ➔ Click ***Upload***.

The new firmware has been saved.

Module selected

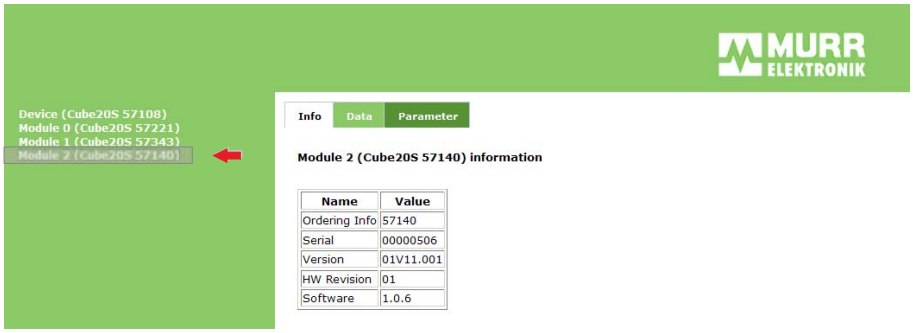

Fig. 5-10: "Info" view if a module is selected

If a module is selected, the web server shows the following pages:

- ***Info***: The ***Info*** tab includes all data of the module
  - Order number
  - Serial number
  - Firmware version
  - Hardware revision
  - Software revision
- ***Data***
- ***Parameters***

Data

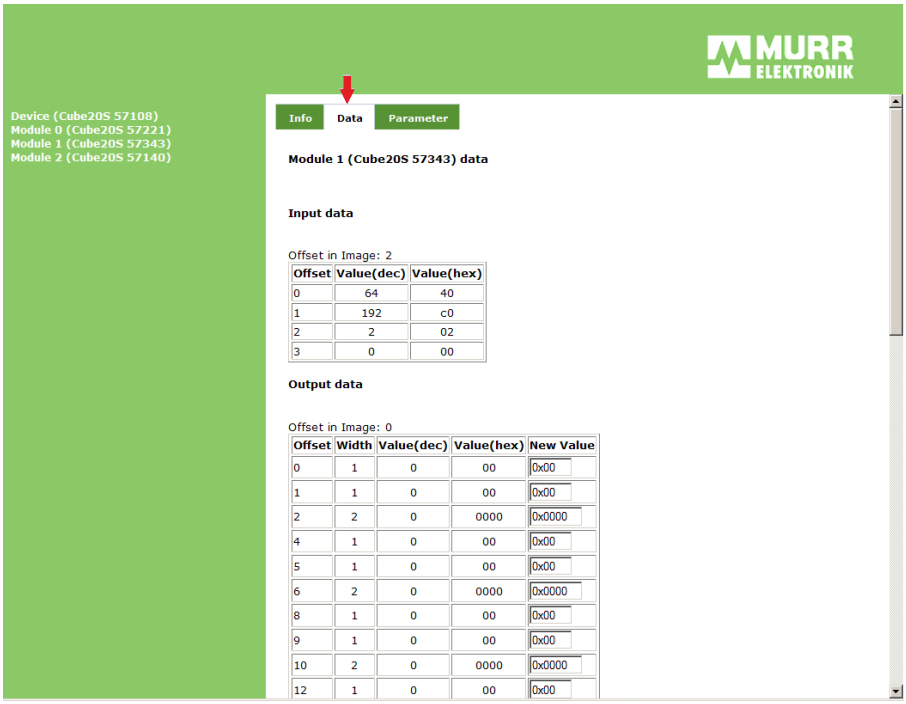

Fig. 5-11: "Data" view if a module is selected

Information about the status of inputs and outputs is shown under "Data". You can directly control the outputs of the module.

Controlling outputs

- ➔ Enter the values in the ***New Value*** fields.
- ➔ Click ***Save***.

The new values are saved.

Parameters

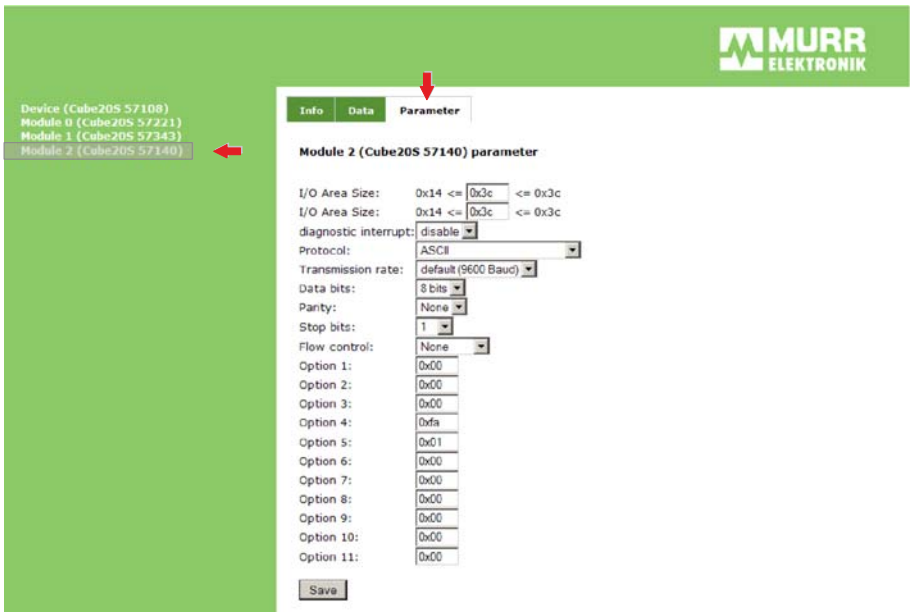

Fig. 5-12: "Parameter" view if a module is selected

If any, you may specify and change the parameters of the module, if required.

Changing parameters

➔ Enter the values.

➔ Click ***Save***.

The new values are saved.

5.2.4 C/Socket programming

Access

ModbusTCP server is accessed using port 502. Simple C programs allow you to transfer data between your PC and the Ethernet bus node using ModbusTCP.

Only use the Ethernet bus node on a PC if you have good experiences with C programming, in particular with socket programming.

Programming

Programming steps for Windows® platforms:

PC
IP: 172.16.192.11

Slave
IP: 172.16.192.11

1

Start Microsoft socket system.

```
WSAStartup
(wVersionRequested, &wsaData);
```

2

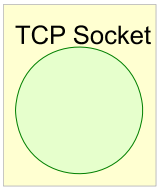

Reserve socket resources for TCP

```
m_lsock = socket (AF_INET,
SOCK_STREAM, 0):
```

3

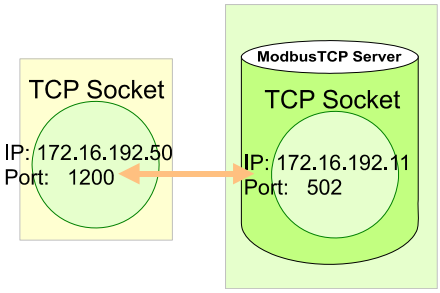

Establish a connection to the external device

```
SockAddr.sin_port = htons (m_wPort);
SockAddr.sin_addr.S_un.S_addr =
inet_addr(m_szIpAddress);
connect(m_lsock, (LPSOCKADDR)
&SockAddr, sizeof(SockAddr));
```

PC
IP: 172.16.192.11

Slave
IP: 172.16.192.11

4

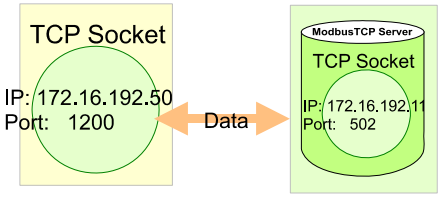

Enable write or read access depending on the protocol telegrams and save them in ***sndBuf***.

sndBufLen contains the number of bytes to be sent.

Read access:

Send ***sndBuf*** (request)	send(m_lsock, (char *)sndBuf, sndBufLen, 0);
Receive telegram in ***rcvBuf*** (response + data)	recv(m_lsock, (char *)rcvBuf, sizeof(rcvBuf), 0);

Write access:

Send ***sndBuf*** (request + data)	send(m_lsock, (char *)sndBuf, sndBufLen, 0);
Receive telegram in ***rcvBuf*** (response)	recv(m_lsock, (char *)rcvBuf, sizeof(rcvBuf), 0);

5

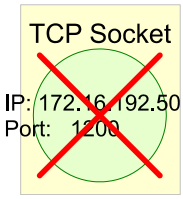

Close socket — closesocket(m_lsock);

5.2.5 Modbus utility

Tools and programs with ModbusTCP interface

ModbusTCP server is accessed using port 502. All tools and programs with ModbusTCP interface are listed under Modbus utility.

Under www.win-tech.com, you can download the **ModbusScan32** demo tool by WinTech, for example.

5.2.6 Modbus controller

Tools and programs with ModbusTCP controllers (PLC)

They communicate as ModbusTCP partners with a ModbusTCP controller (PLC).

➔ Observe the documentation and instructions of the controller used.

NOTE

For Simatic PROFINET controls.

➔ Use the Siemens function block package:
"2XV9450-1MB02 - S7-OpenModbus/TCP"
.

5.3 System access

Overview

In order to access Cube20S modules using ModbusTCP, assign valid IP address data to the Ethernet bus node by means of the MSCP tool. More details on this topic can be found under 5.2, Seite 39.

In the following, we describe access under ModbusTCP to the following parts:

- I/O range
- Parameter data
- Diagnostic data

RECOMMENDATION
Any details on assigning input and output ranges can be found in the manual of the Cube20S module.

NOTE
In the following, the slots within ModbusTCP will be called ModbusTCPslots. The numbering always starts with 0.

Addressing

To directly address the plugged-in expansion modules, certain addresses have to be assigned to them in the Ethernet bus node.

Address ranges in Ethernet bus node:

- Input: 1024 bytes
- Output: 1024 bytes

The Ethernet bus node automatically assigns the addresses (mapping).

➔ You cannot manipulate address assignment.

➔ On the web page of the Ethernet bus node, you may see how addresses were assigned.

Rules

When booting up, the Ethernet bus node automatically assigns the addresses to its input/output modules.
Rules:

- The bus node addresses all modules, starting with address 0, from left to right in ascending order.
- The bus node distinguishes between input and output range. If a module has input and output data, different addresses will be assigned.
- The bus node does **not** distinguish between digital and analog data. It generates each a coherent range for input and output data from all modules.

NOTE
The Ethernet bus node automatically stores modules having more than 1 byte using an even-number address (e.g. analog modules).

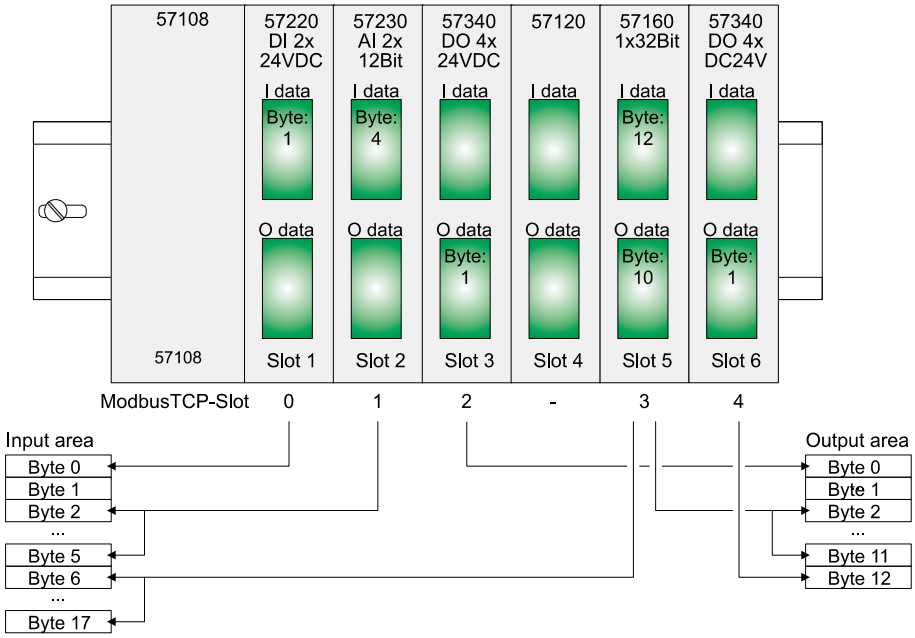

Fig. 5-13: Addressing

Access to the I/O range

Generally, Modbus accesses the I/O range using 0x, 1x, 3x and 4x. 0x and 1x gives you access to digital bit ranges, and 3x and 4x to analog word ranges.

Ethernet bus node with art. no. 57108 does not distinguish between digital and analog data.

The following assignment applies:

Access to range				Function code
0x	Master output	digital	Bit	0x01, 0x05, 0x0F
1x	Master input	digital	Bit	1x02
3x	Master input	analog	Word	3x04, 3x17
4x	Master output	analog	Word	4x03, 4x06, 4x10, 4x16, 4x17

Tab. 5-3: Assignment of the ranges

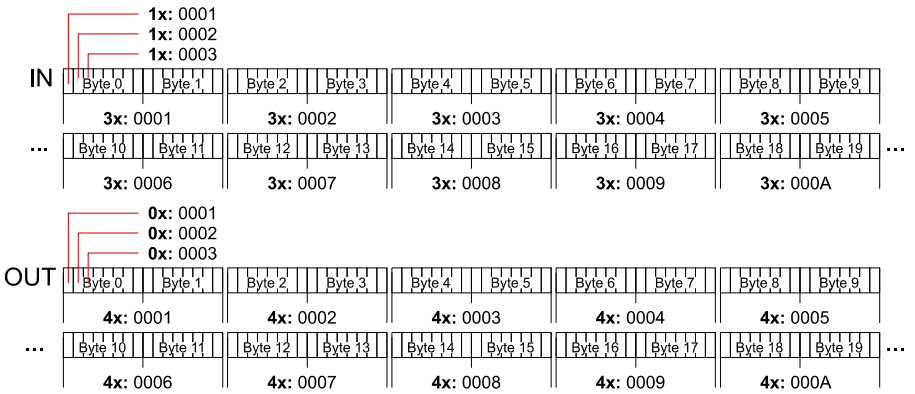

Fig. 5-14: Access to the I/O range

Access to parameter data

During first initialization, the configurable modules will be operated with their default parameters.

Setting module parameters:

➔ Open the integrated web page of the Ethernet bus node.

➔ Change the parameters using the corresponding ModbusTCP slog (see 5.2.3, Seite 41.

Access to diagnostic data

Cube20S modules can deliver alarm data in case of errors, provided parameters have been set accordingly. As soon as one or several modules send an alarm, the alarm data of the slot will be received and acknowledged by the Ethernet bus node. It then sets a bit assigned to the ModbusTCP slot in its internal ***Alarm Information Image*** and stores the alarm data.

In the Cube20S, it is distinguished between diagnostic interrupt and process interrupt in the alarm information image. To distinguish, there is a 64-bit wide field for process interrupt and diagnosis interrupt in the alarm information image.

Bit 0 = ModbusTCP slot 0

...

Bit 63 = ModbusTCP slot 63

For each slot, 16 bytes of process interrupt data and 32 bytes of diagnosis interrupt data follow.

To acknowledge, there is write access to diagnosis and process interrupt status. Alarm data are read-only.

Register assignment

Address	Access		
0x/1x:	**Bit access to process interrupt status**		
4000 ... 403F	0x/1x:	4000	Process interrupt status ModbusTCP slot 0
		4001	Process interrupt status ModbusTCP slot 1
		...	...
		403F	Process interrupt status ModbusTCP slot 63
0x/1x:	**Bit access to diagnosis interrupt status**		
5000 ... 503F	0x/1x:	5000	Diagnosis interrupt status ModbusTCP slot 0
		5001	Diagnosis interrupt status ModbusTCP slot 1
		...	...
		503F	Diagnosis interrupt status ModbusTCP slot 63
3x:	**Word access to process interrupt data**		
4000 ... 41FF	3x:	4000 ... 4007	Process interrupt data ModbusTCP slot 0
		4008 ... 400F	Process interrupt data ModbusTCP slot 1
		...	...
		41F8 ... 41FF	Process interrupt data ModbusTCP slot 63
	3x:	4000 ... 4007	16 bytes process interrupt data of ModbusTCP slot 0
		4008 ... 400F	16 bytes process interrupt data of ModbusTCP slot 1
		4010 ... 4017	16 bytes process interrupt data of ModbusTCP slot 2
		...	...
		41F8 ... 41FF	16 bytes process interrupt data of ModbusTCP slot 63
3x:	**Access to diagnostic interrupt data**		
5000 ... 53FF	3x:	5000 ... 500F	32 bytes diagnostic interrupt data of ModbusTCP slot 0
		5010 ... 501F	32 bytes diagnostic interrupt data of ModbusTCP slot 1
		...	...
		53F0 ... 53FF	32 bytes diagnostic interrupt data of ModbusTCP slot 63

Tab. 5-4: Register assignment

5.4 ModbusTCP

General information

ModbusTCP is a Modbus protocol on top of TCP/IP. The IP address is used for addressing. ModbusTCP allows a client-server communication with several clients being served by one server.

Telegram structure incl. TCP/IP

The request telegrams sent by the master and the response telegrams of a slave have the same structure:

ModbusTCP	Slave address	Function code	Data
6-bytes header with number of following bytes	1-byte data	1-byte data	max. 254 bytes

Tab. 5-5: Telegram structure incl. TCP/IP

ModbusTCP header (6 bytes)

ModbusTCP uses a 6-bytes header for send and receive telegrams. It has the following structure:

Byte	Name	Description
0	Transaction identifier (high byte)	is sent back by the server (any)
1	Transaction identifier (low byte)	is sent back by the server (any)
2	Protocol identifier (high byte)	Always 0
3	Protocol identifier (low byte)	Always 0
4	Length field (high byte)	Always 0, because messages are smaller than 256 bytes
5	Length field (low byte)	Number of following bytes

Tab. 5-6: ModbusTCP header

Normally, bytes 0 ... 4 have value 0. However, it is also possible to increase bytes 0 and 1 in the slave thus having an additional control instance.

5.4.1 Modbus function codes

Naming conventions

Modbus uses naming conventions, which will be briefly explained in the following:

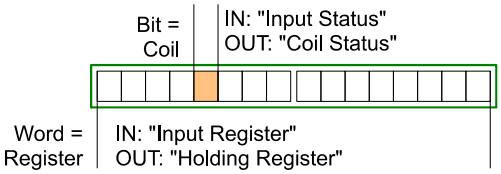

Fig. 5-15: Naming convention

- Modbus distinguishes between bit and word access:
  - Bit = ***Coil***
  - Word = ***Register***
- Bit input = ***Input status***
  Bit output = ***Coil status***
- Word input = ***Input register***
  Word output = ***Holding register***

Access to the I/O range

Generally, Modbus accesses the I/O range using 0x, 1x, 3x and 4x. 0x and 1x gives you access to digital bit ranges, and 3x and 4x to analog word ranges.

Ethernet bus node with art. no. 57108 does not distinguish between digital and analog data.

The following assignment applies:

Access to range				Function code
0x	Master output	digital	Bit	0x01, 0x05, 0x0F
1x	Master input	digital	Bit	1x02
3x	Master input	analog	Word	3x04, 3x17
4x	Master output	analog	Word	4x03, 4x06, 4x10, 4x16, 4x17

Tab. 5-7: Assignment of the ranges

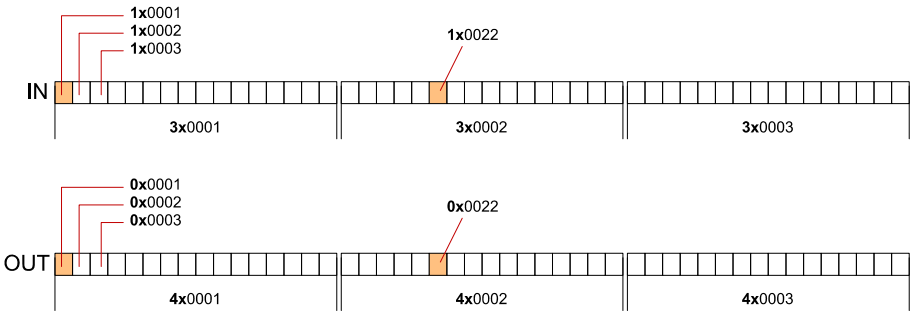

Fig. 5-16: Range definitions

The function codes are described in the following.

Overview

The following function codes allow you to access a slave from a Modbus master. In the following description, the point of view of the master is assumed:

Code [hex]	Command	Description
01	Read n bits	Read n bits of master output range 0x
02	Read n bits	Read n bits of master input range 1x
03	Read n words	Read n words of master output range 4x
04	Read n words	Read n words of master input range 3x
05	Write 1 bit	Write 1 bit in master output range 0x
06	Write 1 word	Write 1 word in master output range 4x
0F	Write n bits	Write n bits in master output range 0x
10	Write n words	Write n words in master output range 4x
16	Mask 1 word	Mask 1 word in master output range 4x
17	Write n words and Read m words	Write n words in master output range 4x and The response includes m read words of the master input range 3x

Tab. 5-8: Overview of function codes

NOTE

The following applies to the order of bytes in a word:

1 word	
High byte	Low byte

Response of the bus node

If the slave returns an error, the function code with 80 [hex] is sent back in an OR link If there is not any error, the function code is returned.

Response of the bus node	Function code OR 80 [hex]	Error and error number
	Function code	OK, no error

In addition, you will receive another byte with an error number in case of error.

The following error numbers are defined:

Code[hex]	Error description
01	Function number is not supported
02	Faulty addressing
03	Faulty data
04	Cube20S bus is not initialized
07	General error

Tab. 5-9: Error numbers

Read n bits
0x01, 1x02

Code 0x01: Read n bits of master output range 0x

Code 1x02: Read n bits of master input range 1x

Modbus TCP header						Slave address	Function code	Address of 1st bit	No. of bits
x	x	0	0	0	6				
6 bytes						1 byte	1 byte	1 word	1 word

Tab. 5-10: Command telegram

Modbus TCP header						Slave address	Function code	No. of bytes read	Data 1st byte	Data 2nd byte	...
x	x	0	0	0							
6 bytes						1 byte	1 byte	1 byte	1 byte	1 byte	
									max. 252 bytes		

Tab. 5-11: Response telegram

Read n words
4x03, 3x04

4x03: Read n words of master output range 4x

3x04: Read n words of master input range 3x

Modbus TCP header						Slave address	Function code	Word address	No. of words	Data 2nd word
x	x	0	0	0	6					
6 bytes						1 byte	1 byte	1 byte	1 word	1 word

Tab. 5-12: Command telegram

Modbus TCP header						Slave address	Function code	No. of bytes read	Data 1st word	Data 2nd word	...
x	x	0	0	0							
6 bytes						1 byte	1 byte	1 byte	1 word	1 word	
									max. 126 words		

Tab. 5-13: Response telegram

Write 1 bit
0x05

Code 0x05: Write 1 bit in master output range 0x

The status under ***Bit status*** changes with the following values:

Bit status = 0x0000 => Bit = 0

Bit status = 0xFF00 => Bit = 1

Modbus TCP header						Slave address	Function code	Address bit	Bit status
x	x	0	0	0	6				
6 bytes						1 byte	1 byte	1 word	1 word

Tab. 5-14: Command telegram

Modbus TCP header						Slave address	Function code	Address bit	Bit status
x	x	0	0	0	6				

Modbus TCP header	Slave address	Function code	Address bit	Bit status
6 bytes	1 byte	1 byte	1 word	1 word

Tab. 5-15: Response telegram

Write 1 word 4x06

Code 4x06: Write 1 word in master output range 4x

Modbus TCP header	Slave address	Function code	Word address	Word value
x x 0 0 0 6				
6 bytes	1 byte	1 byte	1 word	1 word

Tab. 5-16: Command telegram

Modbus TCP header	Slave address	Function code	Word address	Word value
x x 0 0 0 6				
6 bytes	1 byte	1 byte	1 word	1 word

Tab. 5-17: Response telegram

Write n bits 0x0F

Code 0x0F: Write n bits in master output range 0x

NOTE
The number of bits has also to be specified in bytes.

Modbus TCP header	Slave address	Function code	Address of 1st bit	No. of bits	No. of bytes	Data 1st byte	Data 2nd byte	...
x x 0 0 0								
6 bytes	1 byte	1 byte	1 word	1 word	1 byte	1 byte	1 byte	1 byte
						max. 248 bytes		

Tab. 5-18: Command telegram

Modbus TCP header	Slave address	Function code	Address of 1st bit	No. of bits
x x 0 0 0 6				
6 bytes	1 byte	1 byte	1 word	1 word

Tab. 5-19: Response telegram

Write n words x10

Code x10: Write n words in master output range

Modbus TCP header	Slave address	Function code	Address of 1st word	No. of words	No. of bytes	Data 1st word	Data 2nd word	...
x x 0 0 0								
6 bytes	1 byte	1 byte	1 word	1 word	1 byte	1 word	1 word	1 word
						max. 124 words		

Tab. 5-20: Command telegram

Modbus TCP header	Slave address	Function code	Address of 1st word	No. of words
x x 0 0 0 6				
6 bytes	1 byte	1 byte	1 word	1 word

Tab. 5-21: Response telegram

Mask 1 word 4x16

Code 4x16: This function allows you to mask 1 word in master output range 4x.

Modbus TCP header	Slave address	Function code	Word address	AND mask	OR mask
x x 0 0 0 8					
6 bytes	1 byte	1 byte	1 word	1 word	1 word

Tab. 5-22: Command telegram

Modbus TCP header	Slave address	Function code	Word address	AND mask	OR mask
x x 0 0 0 8					
6 bytes	1 byte	1 byte	1 word	1 word	1 word

Tab. 5-23: Response telegram

Write n words and Read m words x17

Code x17: This function allows you to write with one request 4x n words in the master output range and to read 3x m words of the master input range.

Modbus TCP header	Slave address	Function code	Read address	Read no. of words	Write address	Write no. of words	Write no. of bytes	Write data 1st word	Write data 2nd word	...
x x 0 0 0										
6 bytes	1 byte	1 byte	1 word	1 word	1 word	1 word	1 byte	1 word	1 word	
								max. 122 words		

Tab. 5-24: Command telegram

Modbus TCP header	Slave address	Function code	Read no. of bytes	Read data 1st word	Read data 2nd word	...
x x 0 0 0						
6 bytes	1 byte	1 byte	1 byte	1 word	1 word	
				max. 126 words		

Tab. 5-25: Response telegram

5.5 Register assignment

I/O data

Address		Access to
1x	1x0001 ... 1x2000	Bit access to input range
3x	3x0001 ... 3x0200	Word access to input range
0x	0x0001 ... 0x2000	Bit access to output range
4x	4x0001 ... 4x0200	Word access to output range

Register assignment

Address	Access		
0x/1x:	**Bit access to process interrupt status**		
4000 ... 403F	0x/1x:	4000	Process interrupt status ModbusTCP slot 0
		4001	Process interrupt status ModbusTCP slot 1
		...	...
		403F	Process interrupt status ModbusTCP slot 63
0x/1x:	**Bit access to diagnosis interrupt status**		
5000 ... 503F	0x/1x:	5000	Diagnosis interrupt status ModbusTCP slot 0
		5001	Diagnosis interrupt status ModbusTCP slot 1
		...	...
		503F	Diagnosis interrupt status ModbusTCP slot 63
3x:	**Word access to process interrupt data**		
4000 ... 41FF	3x:	4000 ... 4007	Process interrupt data ModbusTCP slot 0
		4008 ... 400F	Process interrupt data ModbusTCP slot 1
		...	...
		41F8 ... 41FF	Process interrupt data ModbusTCP slot 63
	3x:	4000 ... 4007	16 bytes process interrupt data of ModbusTCP slot 0
		4008 ... 400F	16 bytes process interrupt data of ModbusTCP slot 1
		4010 ... 4017	16 bytes process interrupt data of ModbusTCP slot 2
		...	...
		41F8 ... 41FF	16 bytes process interrupt data of ModbusTCP slot 63
3x:	**Access to diagnostic interrupt data**		
5000 ... 53FF	3x:	5000 ... 500F	32 bytes diagnostic interrupt data of ModbusTCP slot 0
		5010 ... 501F	32 bytes diagnostic interrupt data of ModbusTCP slot 1
		...	...
		53F0 ... 53FF	32 bytes diagnostic interrupt data of ModbusTCP slot 63

Tab. 5-26: Register assignment

5.6 LED status indication

General information

The LEDs for status indication allow full diagnosis during the PowerON procedure and during operation. Crucial for the diagnosis is the combination of different LEDs and the current operation mode.

PWR	SF	RUN	MT	L/A	SPD	Status
green	red	green	yel-low	green	green	
	x	x	x	x	x	Power supply of the bus node OK.
			x		x	The bus node communicates over Ethernet - there are not any errors.
	x	B1	x	x	x	BASP enabled (Ethernet communication timeout)
	x	x	x			No physical connection to the Ethernet
			x	x	x	Error in Ethernet communication - Incorrect IP address - Incorrect DHCP setting - Faulty module plugged in
	B2		x	x	x	Error on the Cube20S bus - The module is not supported
	B3		x	x	x	Error on the Cube20S bus - Error in the parameterization
	x	x	B1	x	x	User has started identification of the bus node (duration: 10s).
		x	B1	x	x	User has started firmware update.
				x	x	Firmware update completed. **- Switch power OFF and ON again!**

on			off	flashing	not relevant
				B1, B2, B3	x

Blink code	Duration	Representation with red LED				
B1	1s:					...
B2	1s:					
B3	1s:					

6 General data

Conformity			
	CE	2004/108/EC	EMC Directive
		2011/65/EU	RoHS

Personal and device protection			
	Ingress protection	EN 60529	IP20
	Electric isolation		
	To fieldbus	-	DC-isolated
	To process level	-	DC-isolated
	Dielectric strength	EN 61131-2	-
	Insulation voltage to ground		
	Inputs / outputs	-	50 V AC/DC, with test voltage 500 V AC
	Protective measures	-	against short-circuit

Ambient conditions			
	Climatic		
	Storage / transport	EN 60068-2-14	-25 … +70 °C
	Operation		
	Horizontal installation	EN 61131-2	0 … +60 °C
	Vertical installation	EN 61131-2	0 … +60 °C
	Humidity	EN 60068-2-30	RH1 (without condensation, relative humidity 10 … 95 %)
	Pollution	EN 61131-2	Pollution degree 2
	Mechanical		
	Vibration	EN 60068-2-6	1 g, 9 Hz ... 150 Hz
	Shock	EN 60068-2-27	15 g, 11 ms

Installation conditions			
	Place of installation	-	Inside the switch cabinet
	Installation position	-	Horizontal and vertical
	Fastening	-	35 mm DIN rail

EMC / Standard			Notes
	Emitted interfer-ence	EN 61000-6-4	Class A (industrial environments)
	Immunity Zone B	EN 61000-6-2	Industrial environments
		EN 61000-4-2	ESD 8 kV with air discharge (severity grade 3), 4 kV with contact discharge (severity grade 2)
		EN 61000-4-3	HF irradiation (housing) 80 MHz ... 1000 MHz, 10 V/m, 80 % AM (1 kHz) 1.4 GHz ... 2.0 GHz, 3 V/m, 80 % AM (1 kHz) 2 GHz ... 2.7 GHz, 1 V/m, 80 % AM (1 kHz)
		EN 61000-4-6	conducted 150 kHz … 80 MHz, 10 V, 80 % AM (1 kHz)
		EN 61000-4-4	Burst, severity grade 3
		EN 61000-4-5	Surge, installation class 3 *)

*) Due to single high-energy impulses, a suitable external wiring with lightning protection elements is required for surge, e.g. lightning arresters and surge arrester.

Mechanical data	Housing	
	Material	PPE / PPE GF10
	Dimensions (W x H x D)	48.5 x 109 x 76.5 mm
	Weight	155 g

7 Technical data

Power supply		
	Supply voltage (nominal value)	24 V DC
	Supply voltage (admissible range)	20.4...28.8 V DC
	Reverse polarity protection	yes
	Power consumption (idle)	95 mA
	Power consumption (nominal value)	0.95 A
	Switch-on current	2.8 A
	I^2t	0.25 A^2s
	max. current supply to backplane bus	3 A
	max. current supply - load supply	10 A
	Power dissipation	3 W

Status, interrupt, diagnoses		
	Status indicator	yes
	Alarms	yes, programmable
	Process interrupt	yes, programmable
	Diagnostic interrupt	yes, programmable
	Diagnostic function	yes, programmable
	Diagnosis information readable	possible
	Supply voltage indication	Green LED
	Maintenance indication	Yellow LED
	Collective error indication	Red LED
	Channel error	none

Design		
	Max. racks	-
	Assemblies in each rack	64
	Max. no. of digital assembly groups	64
	Max. no. of analog assembly groups	64

Communication		
	Fieldbus	ModbusTCP/IP
	Physics	Ethernet 10/100 Mbit
	Connection	RJ45
	Topology	-
	electrically isolated	yes
	Max. no. of devices	-
	Device address	-
	Min. transfer rate	10 Mbit/s
	Max. transfer rate	100 Mbit/s
	Max. address range for inputs	1 KB
	Max. address range for outputs	1 KB
	Max. no. of TxPDO	-
	Max. no. of RxPDO	-

8 Annex

8.1 Accessories

Bus cover
Art. no. 57190

Fig. 8-1: Bus cover

Carrier for shield busses

The shield busses (10 mm x 3 mm) to connect cable shields are fastened on the carrier.

NOTE
Carriers for shield busses, shield busses and cable shield fasteners are not included in the delivery.

Installing the carrier

✓ Prerequisite: The Cube20S system has been completely mounted.

➔ If the DIN rail is flat, break the spacer off the carrier.

➔ Plug the carrier in the terminal module below the terminal block until it engages.

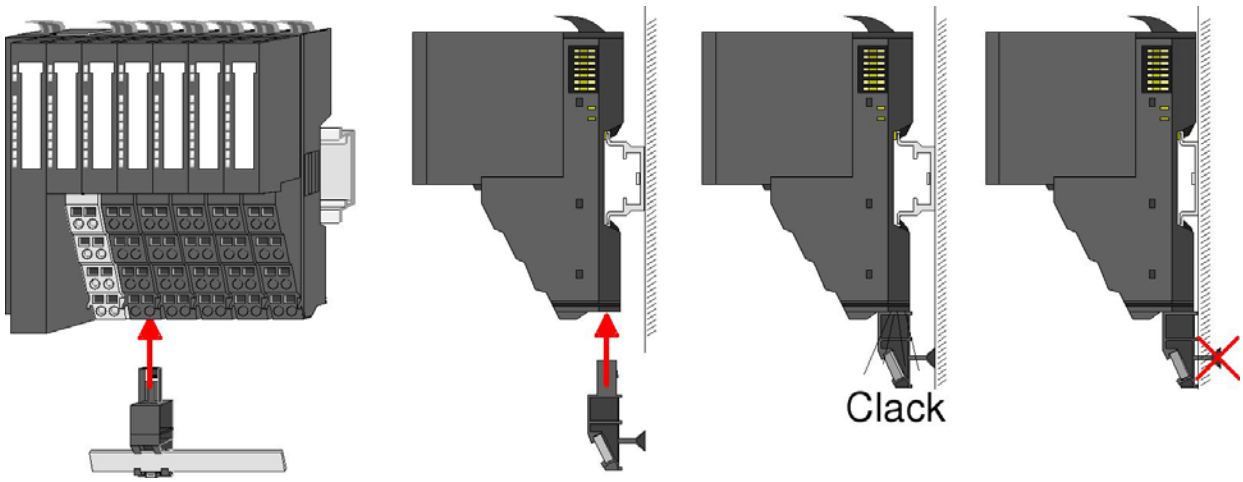

Fig. 8-2: Installing the carriers for shield busses

8.2 Glossary

ModbusTCP:

Term	Meaning
Address mapping	Address mapping is mapping one address on another address system. Address mapping translates addresses of a protocol into addresses of another protocol. This allows systems using two different protocols to work with each other.
API	Application programming interface Interface that a software system provides to other programs in order to interact with them.
BASP	BASP (= Befehlsausgabesperre, i.e. command output block) enabled means that all module outputs will be disabled and inputs will not be read.
Broadcast	Broadcast in a computer network is a message by means of which data packages are transferred from one point to all network devices.
Ethernet/IP	Ethernet Industrial Protocol Open standard for industrial networks that supports both cyclic and acyclic transfer of messages and uses standard Ethernet communication chips and physical media.
IP	Internet Protocol Protocol used for transferring data within a network, e.g. internet or intranet, from one computer to another. Each computer in the network can be clearly identified by means of its IP address. If data is sent from one computer to the other, it is subdivided into small information packages containing each sender and receiver addresses. These packages can be sent over the network using different routes and arrive at their destination in a different order than the sequence of sending. Another protocol, the transmission control protocol [TCP], then restores the original order.
Mapping on TCP/IP	Modbus TCP uses the ***Transport Control Protocol*** (TCP) to transfer the Modbus application protocol during data transfer in Ethernet TCP/IP networks. Parameters and data are embedded in the use data container of a TCP telegram according to the encapsulation principle. During embedding, the client creates a ***Modbus Application Header*** (MBAP) that allows the server to clearly interpret the received Modbus parameters and commands. In general, only one Modbus application protocol may be embedded in a TCP/IP telegram.
MAC address	Media Access Control Address Hardware address of network components used for clearly identifying devices in a network.
Master/slave principle	Master/slave principle The master requests, the slaves follow the instructions of the master. For example, an automation device, as master, grants access rights to the other components (slave) in a decentralized bus control.
Modbus	Master/slave network that allows a master computer, for example, to communicate with one or several PLC or remote IO, to program, to transfer data or to carry out other operations. All communication are initialized by a Modbus master device in a Modbus network. The master can be a computer, a control panel, a programming device or a PLC enabled for ASCII communication.

Term	Meaning
Modbus data model	The data model has a simple structure. 4 basic types are distinguished: discrete inputs (inputs), coils (outputs), input register (input data) and holding register (output data). In today's Modbus implementations, these basic definitions are used very widely also for numerous other data types of modern automation devices. Manufacturers have to specify the meaning and address of the data individually in the manuals of the devices.
Modbus TCP	ModbusTCP is very similar to Modbus RTU but TCP/IP packages are used for data transfer. TCP port 502 is reserved for ModbusTCP. Since 2007, ModbusTCP is defined in the IEC 61158 standard and is referred to as CPF 15/1 in the IEC 61784-2 standard.
Modbus RTU	Modbus RTU (RTU: Remote Terminal Unit) transfers data in binary form. This guarantees good data throughput. However, data cannot be analyzed directly by humans; previously, they have to be converted into a readable format.
OSI model	Open Systems Interconnection Reference Model The OSI layer model was published in 1972 by ISO with the aim to facilitate connection between networks of different manufacturers with different topologies. The OSI model is a standard that classifies and defines according to which principles communication between the network components takes place using different protocols (rules). It consists of seven layers in total: Physical layer Data link layer Network layer Transport layer Session layer Presentation layer Application layer
TCP	Transmission Control Protocol This protocol is used together with Internet Protocol [IP] to transfer data on the internet from one computer to another.

8.3 Legal information

Exclusion of liability

Murrelektronik GmbH checked the contents of this technical documentation for conformity with the described hardware and software. Changes on an individual case basis cannot be excluded. For this reason, we shall not assume any responsibility for errors or omissions, in particular for a complete conformity. This exclusion of liability shall not apply in case the damage is caused deliberately and/or due to gross negligence as well as for all claims based on the German Product Liability Act. Should a major contractual obligation negligently be violated, the liability of Murrelektronik GmbH shall be limited to damages that typically arise.

Subject to technical modifications or changes with regard to contents. We recommend to regularly check whether this documentation has been updated because corrections that might be required due to technical modifications will be included by Murrelektronik GmbH at regular intervals. We are always grateful for any proposals of improvement.

Copyright

Rights of use

Murrelektronik GmbH grants its customers a non-exclusive right revocable at any time and for an indefinite period of time to use this technical documentation to produce their own technical documentation. For this purpose, the documentation produced by Murrelektronik GmbH may be changed in parts, or amended, or copied, and transferred to the customer's users as part of the customer's own technical documentation on paper or on electronic media. In this case, the customers shall bear sole responsibility for the correctness of the contents of the technical documentation produced by them.

If the technical documentation is integrated in part, or in full in the customer's technical documentation, the customer shall refer to the copyright of Murrelektronik GmbH. Furthermore, special attention shall

be paid to compliance with the safety instructions.

Although the customers are obliged to make reference to the copyright of Murrelektronik GmbH, provided the technical documentation of Murrelektronik GmbH is used, the customers shall market and/or use the technical documentation on their sole responsibility. The reason is that Murrelektronik GmbH has no influence on changes or applications of the technical documentation and even minor changes to the starting product or deviations in the intended applications may render incorrect the specifications contained in the technical documentation. For this reason, the customers are obliged to identify the technical documentation originating from Murrelektronik GmbH if and inasmuch as the documentation is changed by the customers. The customers shall undertake to exempt Murrelektronik from the damage claims of third parties if the latter are attributable to any deficits in the documentation. This shall not apply to damages to the rights of third parties caused deliberately or by gross negligence.

The customers shall be entitled to use the company brands of Murrelektronik GmbH exclusively for their product advertising, but only inasmuch as the products of Murrelektronik GmbH are integrated in the products marketed by the customers. When using Murrelektronik GmbH brands, the customers shall mention this in an adequate manner.

Murrelektronik GmbH | Falkenstraße 3, D-71570 Oppenweiler
+49 7191 47-0 | +49 7191 47-491 000 | info@murrelektronik.com
www.murrelektronik.com