Inline Filter RFL Welded Version

up to 15000 l/min, up to 16 bar

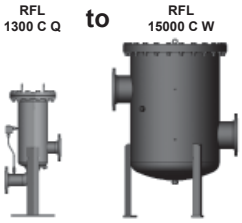

1. TECHNICAL SPECIFICATIONS

1.1 FILTER HOUSING

Construction

The filter housings are designed in accordance with international regulations. They consist of a two-piece filter housing with a bolt-on cover plate.

Standard equipment:

- stand
- inlet and outlet are positioned at different heights on opposite sides
- connections for venting and draining
- connection for a clogging indicator

1.2 FILTER ELEMENTS

HYDAC filter elements are validated and their quality is constantly monitored according to the following standards:

- ISO 2941
- ISO 2942
- ISO 2943
- ISO 3724
- ISO 3968
- ISO 11170
- ISO 16889

Contamination retention capacities in g

		Betamicron® (BN4HC)			
RFL	Elements	3 µm	5 µm	10 µm	20 µm
130x	1x1300 R	181.0	200.7	241.4	273.1
132x	1x2600 R	369.4	409.4	492.5	557.2
250x	3x0850 R	336.3	372.6	448.5	507.3
252x	3x1700 R	689.4	764.1	919.2	1039.8
400x	5x0850 R	560.5	621.0	747.5	845.5
402x	5x1700 R	1149.0	1273.5	1532.0	1733.0
520x	4x1300 R	724.0	802.8	965.6	1092.4
522x	4x2600 R	1477.6	1637.6	1970.0	2228.8
650x	5x1300 R	905.0	1003.5	1207.0	1365.5
652x	5x2600 R	1847.0	2047.0	2462.5	2786.0
780x	6x1300 R	1086.0	1204.2	1448.4	1638.6
782x	6x2600 R	2216.4	2456.4	2955.0	3343.2
1500x	10x1300 R	1810.0	2007.0	2414.0	2731.0
1502x	10x2600 R	3694.0	4094.0	4925.0	5572.0

Filter elements are available with the following pressure stability values:

Betamicron® (BN4HC):	20 bar
Paper (P/HC):	10 bar
Stainl. st. wire mesh (W/HC):	20 bar
Stainless steel fibre (V):	30 bar
Betamicron®/Aquamicron® (BN4AM):	10 bar
Aquamicron® (AM):	10 bar

1.3 FILTER SPECIFICATIONS

Nominal pressure	16 bar	
Temperature range	-10 °C to +100 °C	
Material of filter housing and cover plate	RFL 1300 to 15020: RFL 1303 to 15023:	Welded steel Stainless steel 1.4571
Type of clogging indicator	VM (differential pressure measurement up to 210 bar operating pressure)	
Pressure setting of the clogging indicator	2 bar (others on request)	
Bypass cracking pressure	3 bar (others on request)	

1.4 SEALS

NBR (=Perbunan)

1.5 INSTALLATION

As inline filter

1.6 SPECIAL MODELS AND ACCESSORIES

- Drain and vent ports with ball valves or other shut-off valves
- Inlet and outlet positioned one above the other
- Counter flanges available for all sizes
- Venting line with sight gauges
- Cover plate lifting device

1.7 SPARE PARTS

See Original Spare Parts List

1.8 CERTIFICATES AND APPROVALS

Material code (final digit of filter size) - 1:

These filters can be supplied with manufacturer's test certificates O and M to DIN 55350, Part 18. Test certificates 3.1 to DIN EN 10204.

Material code (final digit of filter size) - 3:

Filters for use in separation technology with low viscosity, high viscosity and aggressive fluids as well as gaseous media.*

* *These filters are available from HYDAC Process Technology division.*

1.9 COMPATIBILITY WITH HYDRAULIC FLUIDS ISO 2943

- Hydraulic oils H to HLPD DIN 51524
- Lubrication oils DIN 51517, API, ACEA, DIN 51515, ISO 6743
- Compressor oils DIN 51506
- Biodegradable operating fluids VDMA 24568 HETG, HEES, HEPG
- Fire-resistant fluids HFA, HFB, HFC and HFD
- Operating fluids with high water content (>50% water content) on request

1.10 IMPORTANT INFORMATION

- Filter housings must be earthed.
- When using electrical clogging indicators, the electrical power supply to the system must be switched off before removing the clogging indicator connector.
- Filters must be flexibly mounted and not fixed rigidly to the floor or used as a pipe support.

Symbol for hydraulic systems

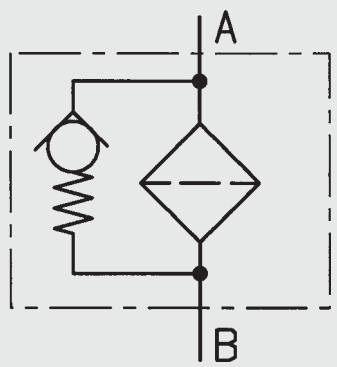

2. MODEL CODE (also order example)

RFL BN/HC 1300 C K 10 D 1 . X /-L24

2.1 COMPLETE FILTER

Filter type
RFL

Filter material of element

BN/HC	Betamicron® (BN4HC)	P/HC	Paper	AM	Aquamicron®
V	Stainless steel fibre	W/HC	Wire mesh	BN/AM	Betamicron®/Aquamicron®

Size of filter or element
RFL: 1300, 1303, 1320, 1323, 2500, 2503, 2520, 2523, 4000, 4003, 4020, 4023, 5200, 5203, 5220, 5223, 6500, 6503, 6520, 6523, 7800, 7803, 7820, 7823, 15000, 15003, 15020, 15023

Operating pressure
C = 16 bar

Type and size of connection

Type	Port thread	Filter size 1300 / 1303	1320 / 1323	2500 / 2503 / 2520 / 2523	4000 / 4003 / 4020 / 4023	5200 / 5203 / 5220 / 5223	6500 / 6503 / 6520 / 6523	7800 / 7803 / 7820 / 7823	15000 / 15003 / 15020 / 15023
K	DIN DN 40	●	●						
L	DIN DN 50	●	●	●					
M	DIN DN 65	●	●	●					
Q	DIN DN 80	●	●	●	●	●			
R	DIN DN 100	●	●	●	●	●	●	●	
U	DIN DN 125		●	●	●	●	●	●	
V	DIN DN 150			●	●	●	●	●	
W	DIN DN 200				●	●	●	●	●
X	DIN DN 250					●	●	●	●
Y	DIN DN 300								●

Filtration rating in µm
BN/HC, V: 3, 5, 10, 20 — P/HC: 10, 20 — AM: 40
W/HC: 25, 50, 100, 200 — BN/AM: 3, 10

Type of clogging indicator
Y plastic blanking plug in indicator port
A steel blanking plug in indicator port
B visual
C electrical
D visual and electrical
] for other clogging indicators, see brochure no. 7.050../..

Type code
1

Modification number
X the latest version is always supplied

Supplementary details
B. special cracking pressure of bypass (e.g. B1 = 1 bar)
DH cover plate lifting device
KB without bypass valve
L... light with appropriate voltage (24V, 48V, 110V, 220V)
LED 2 light emitting diodes up to 24 Volt
] only for clogging indicators type "D"
OR O-ring groove on the DIN flange (inlet and outlet) to Rexroth standard AB 22-04
RE sealing strip E on the flange (inlet and outlet): surface finish 3.6 µm
V FPM seals
33 inlet and outlet positioned one above the other

2.2 REPLACEMENT ELEMENT

1300 R 010 BN4HC /-V

Size
0850, 1300, 1700, 2600

Type
R

Filtration rating in µm
BN4HC, V: 003, 005, 010, 020 — P/HC: 010, 020 — AM: 040
W/HC: 025, 050, 100, 200 — BN4AM: 003, 010

Filter material
BN4HC, V, W/HC, P/HC, BN4AM, AM

Supplementary details
V (for descriptions, see point 2.1)

2.3 REPLACEMENT CLOGGING INDICATOR

VM 2 D . X /-L24

Type
VM differential pressure measurement up to 210 bar operating pressure

Pressure setting
2 standard 2 bar, others on request

Type of clogging indicator (see Point 2.1)

Modification number
X the latest version is always supplied

Supplementary details
L..., LED, V (for descriptions, see point 2.1)

www.comoso.com

3. FILTER CALCULATION / SIZING

The total pressure drop of a filter at a certain flow rate Q is the sum of the housing Δp and the element Δp and is calculated as follows:

$\Delta p_{total} = \Delta p_{housing} + \Delta p_{element}$

$\Delta p_{housing}$ = (see Point 3.1)

$\Delta p_{element} = Q \cdot \frac{SK^*}{1000} \cdot \frac{viscosity}{30}$

(*see point 3.2)

For ease of calculation, our Filter Sizing Program is available on request free of charge.

NEW: Sizing online at www.hydac.com

3.1 Δp-Q HOUSING CURVES BASED ON ISO 3968

The housing curves apply to mineral oil with a density of 0.86 kg/dm³ and a kinematic viscosity of 30mm²/s.
In this case, the differential pressure changes proportionally to the density.

RFL 1300, 1303

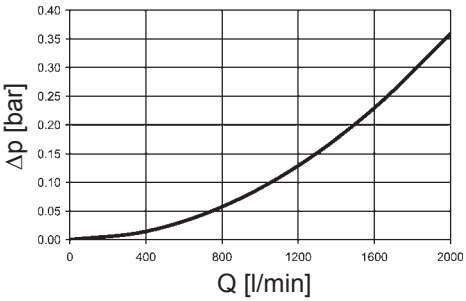

RFL 1320, 1323

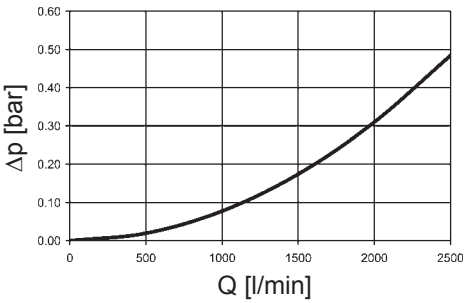

RFL 2500, 2503, 2520, 2523

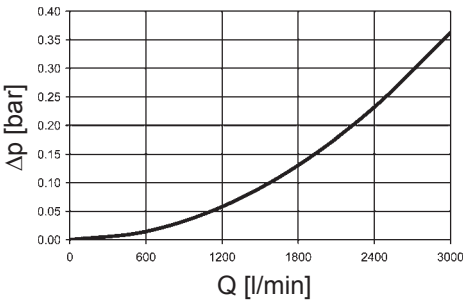

RFL 4000, 4003, 4020, 4023

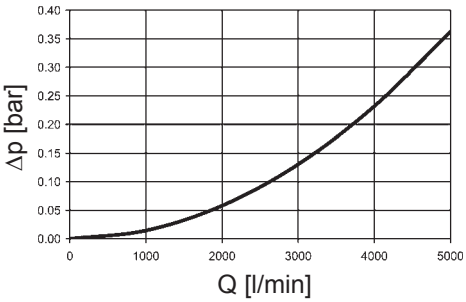

RFL 5200, 5203, 5220, 5223

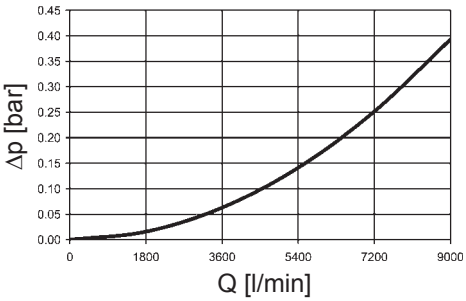

RFL 6500, 6503, 6520, 6523

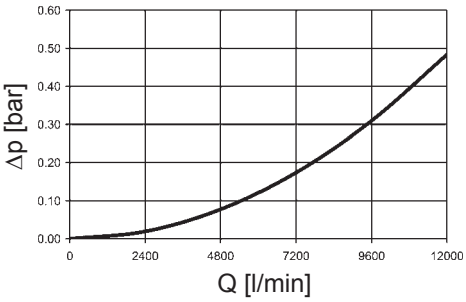

RFL 7800, 7803, 7820, 7823

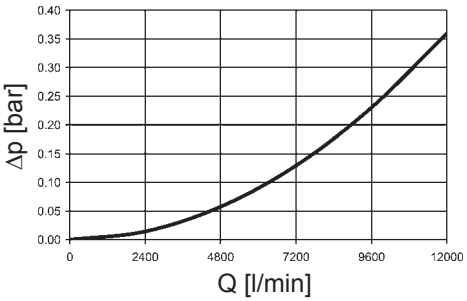

RFL 15000, 15003, 15020, 15023

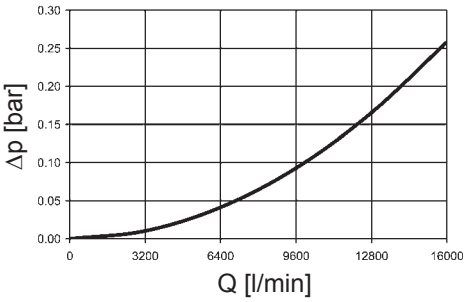

3.2 GRADIENT COEFFICIENTS (SK) FOR FILTER ELEMENTS

The gradient coefficients in mbar/(l/min) apply to mineral oils with a kinematic viscosity of 30 mm²/s. The pressure drop changes proportionally to the change in viscosity.

RFL	V				W/HC
	3 µm	5 µm	10 µm	20 µm	–
850	0.8	0.6	0.4	0.3	0.063
1300	0.5	0.4	0.3	0.2	0.045
1700	0.4	0.3	0.2	0.1	0.032
2600	0.3	0.2	0.1	0.1	0.018

BN4HC: RFL 850

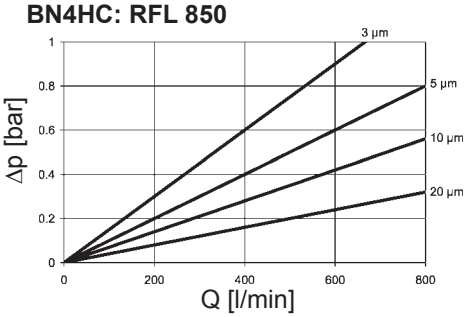

BN4HC: RFL 1300

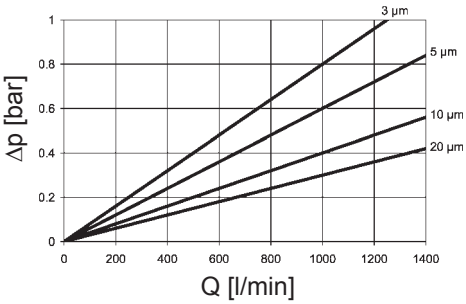

BN4HC: RFL 1700

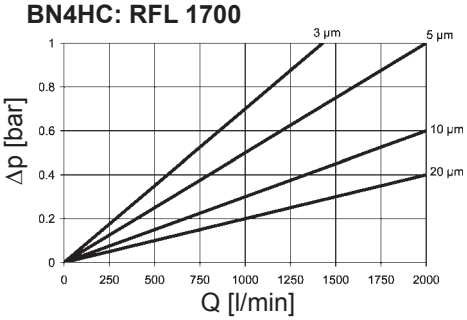

BN4HC: RFL 2600

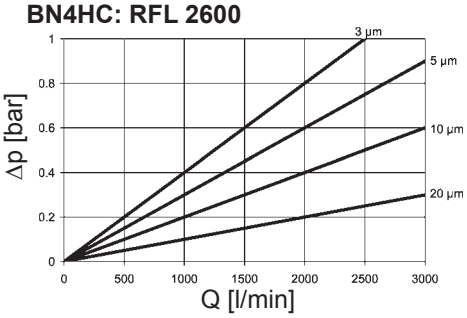

www.comoso.com

4. DIMENSIONS

RFL 1300 - 2520

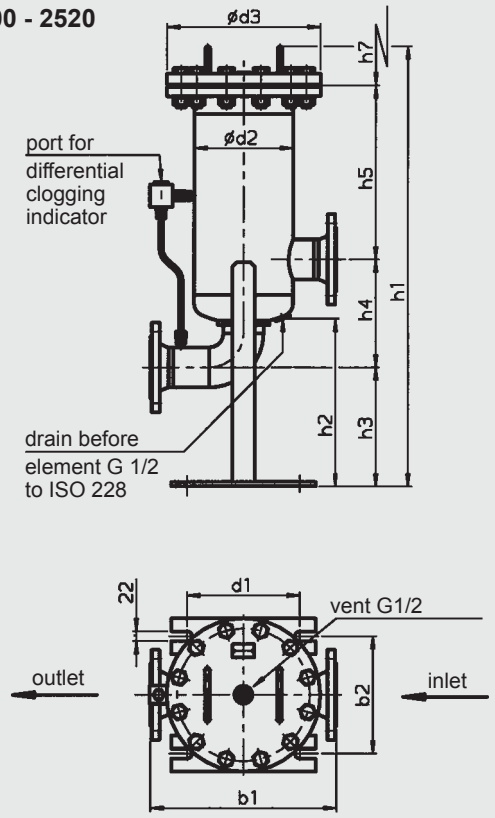

RFL 4000 - 15020

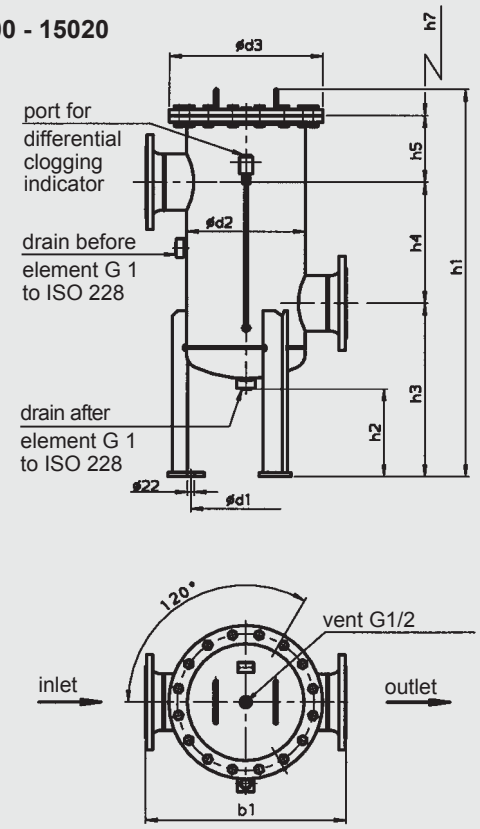

RFL	Flange b1 port	b2	d1	d2	d3	h1	h2	h3	h4	h5	h7	Weight including	Volume of pressure element [kg]	chamber [l]
130x/132x	DIN DN 40 DIN DN 50 DIN DN 65 DIN DN 80 DIN DN 100	412	260	250	219.1	340	972/1416	370	294 266 279 266 253	212 240 227 240 275	384/824 384/824 384/824 384/824 362/802	500/940	64.1/78.1 64,1/78,1 65.1/79.1 67.1/81.1 69.1/83.1	18/33 18/33 18/33 19/34 19/34
132x	DIN DN 125	480	260	250	219.1	340	/1416	370	215	291	/824	/940	87.1	/36
250x/252x	DIN DN 50 DIN DN 65 DIN DN 80 DIN DN 100 DIN DN 125 DIN DN 150	466	312	250	273	360	942/1332 990/1380 990/1380 1050/1440 1050/1440 1050/1440	220	378 408 388 438 438 438	270 350 410 304 380 365	222/612 160/550 120/510 236/626 160/550 175/565	420/810 420/810 420/810 420/810 420/810 420/810	73,9/82,4 70.9/85.4 72.9/87.4 75.9/90.4 79.9/94.4 83.9/98.4	34/54 36/56 36/56 40/60 40/60 45/65
400x/402x	DIN DN 80 DIN DN 100 DIN DN 125 DIN DN 150 DIN DN 200	600	-	330	355.6	460	1079/1469 1079/1469 1169/1459 1169/1559 1204/1594	266	475 475 525 525 525	410 304 380 365 365	115/505 221/661 185/575 200/590 235/625	420/810 420/810 420/810 420/810 420/810	119.5/145.0 121.5/147.0 127.5/153.0 133.5/159.0 140.5/166.0	64/99 65/100 75/110 75/110 83/118
520x/522x	DIN DN 80 DIN DN 100 DIN DN 125 DIN DN 150 DIN DN 200 DIN DN 250	600 600 600 600 640 660	-	380	406.4	510	1144/1584 1144/1584 1256/1696 1256/1696 1256/1696 1324/1764	244	465 465 525 525 525 560	410 304 380 365 365 450	191/631 297/737 271/711 286/726 286/726 236/676	500/940	158.4/202.4 160.4/204.4 170.4/214.4 175.4/219.4 179.4/223.4 194.4/238.4	89/142 90/143 104/157 106/159 110/162 125/178
650x/652x	DIN DN 100 DIN DN 125 DIN DN 150 DIN DN 200 DIN DN 250	740 740 740 740 780	-	480	508	620	1260/1700 1260/1700 1260/1700 1380/1820 1380/1820	255	540 540 540 600 600	304 380 365 460 450	3367776 260/700 275/715 240/680 250/690	500/940	221.5/274.5 225.5/278.5 230.5/283.5 245.5/298.5 255.5/308.5	161/246 162/247 163/248 190/275 194/279
780x/782x	DIN DN 100 DIN DN 125 DIN DN 150 DIN DN 200 DIN DN 250	740 740 740 740 780	-	480	508	620	1260/1700 1260/1700 1260/1700 1380/1820 1380/1820	255	540 540 540 600 600	304 380 365 460 450	336/776 260/700 275/715 240/680 250/690	500/940	225.6/282.6 229.6/286.6 234.6/291.6 249.6/306.6 259.6/316.6	161/246 162/247 163/248 190/275 194/279
1500x/ 1502x	DIN DN 200 DIN DN 250 DIN DN 300	1000	-	690	711	830	1425/1865 1425/1865 1495/1935	263	655 655 670	365 450 515	330/770 245/685 235/675	500/940	476.0/570.0 488.0/582.0 513.0/607.0	391/558 397/564 426/593

NOTE

The information in this brochure relates to the operating conditions and applications described.
For applications or operating conditions not described, please contact the relevant technical department.
Subject to technical modifications.

HYDAC FILTERTECHNIK GMBH
Industriegebiet
66280 Sulzbach/Saar, Germany
Tel.: 0 68 97 / 509-01
Fax: 0 68 97 / 509-300
Internet: www.hydac.com
E-mail: filter@hydac.com

www.comoso.com

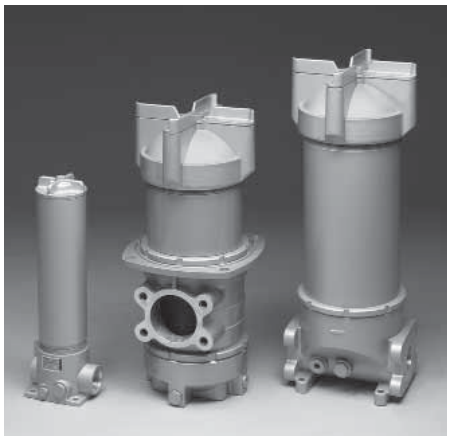

Inline filters NF
up to 3500 l/min, up to 25 bar

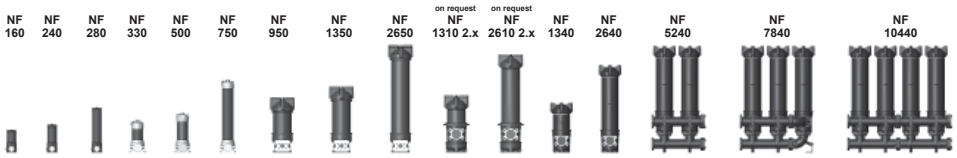

1. TECHNICAL SPECIFICATIONS

1.1 FILTER HOUSING

Construction

The filter housings are designed in accordance with international regulations. They consist of a filter housing and a threaded cover plate.

Standard equipment:

- with bypass valve
- port for clogging indicator

1.2 FILTER ELEMENTS

HYDAC filter elements are validated and their quality is constantly monitored according to the following standards:

- ISO 2941
- ISO 2942
- ISO 2943
- ISO 3724
- ISO 3968
- ISO 11170
- ISO 16889

Contamination retention capacities in g

		Betamicron® (BN4HC)			
NF	Elemente	3 µm	5 µm	10 µm	20 µm
160	1x0160R	18.6	20.7	24.9	28.1
240	1x0240R	29.3	32.5	39.1	44.2
280	1x0280R	62.3	69.0	83.0	93.9
330	1x0330R	38.4	42.6	51.2	57.9
500	1x0500R	58.9	65.3	78.6	88.9
750	1x0750R	147.1	163.0	196.1	221.9
950	1x0950R	130.0	144.1	173.3	196.1
13xx	1x1300R	181.0	200.7	241.4	273.1
26xx	1x2600R	369.4	409.4	492.5	557.2
5240	2x2600R	738.8	818.8	985.0	1114.4
7840	3x2600R	1108.2	1228.2	1477.5	1671.6
10440	4x2600R	1477.6	1637.6	1970.0	2228.8

Filter elements are available with the following pressure stability values:

Betamicron® (BN4HC):	20 bar
Stainl. steel wire mesh (W/HC):	20 bar
Stainless steel fibre (V):	30 bar
ECOmicron® (ECON2):	10 bar
Paper (P/HC):	10 bar
Betamicron®/Aquamicron® (BN4AM):	10 bar
Aquamicron® (AM):	10 bar

1.3 FILTER SPECIFICATIONS

Nominal pressure	25 bar
Max. operating pressure	30 bar at max. 10^6 cycles
Temperature range	-10 °C to +100 °C
Material of filter head	Aluminium
Material of tube (housing)	Steel up to NF 750 Aluminium for NF 950 and above
Material of cover plate	Aluminium
Type of clogging indicator	VM (differential pressure measurement)
Pressure setting of the clogging indicator	2 bar (others on request)
Bypass cracking pressure	3 bar (others on request)

1.4 SEALS

NBR (= Perbunan)

1.5 MOUNTING

As inline filter

1.6 SPECIAL MODELS AND ACCESSORIES

- Mounting bracket for NF 1310, 1340, 2610, 2640
- Mounting flange for NF 1340/2640
- Filling connection for NF 330, 500, 750, 950, 1350, 2650 on the contaminated side
- Foot bracket option for NF 160-750, 950, 1350, 2650
- Quick release coupling on the filling connection for NF 160, 240, 280
- Check valve on the clean side for NF 160, 240, 280
- For applications up to 40 bar, please make separate request! (only for NF 950, 1350, 2650)
- NF filter as tank-top return line filter (type code 1.x) and as inline filter (horizontal inlet flange at top, outlet vertical; (type code 3.x) on request

1.7 SPARE PARTS

See Original Spare Parts List

1.8 CERTIFICATES AND APPROVALS

On request

1.9 COMPATIBILITY WITH HYDRAULIC FLUIDS ISO 2943

- Hydraulic oils H to HLPD DIN 51524
- Lubrication oils DIN 51517, API, ACEA, DIN 51515, ISO 6743
- Compressor oils DIN 51506
- Biodegradable operating fluids VDMA 24568 HETG, HEES, HEPG
- Fire-resistant fluids HFA, HFB, HFC and HFD
- Operating fluids with high water content (>50% water content) on request

1.10 IMPORTANT INFORMATION

- Filter housings must be earthed.
- When using visual clogging indicators, the BM version (visual with manual reset) only should be used.
- When using electrical clogging indicators, the electrical power supply to the system must be switched off before removing the clogging indicator connector.

Symbol for hydraulic systems

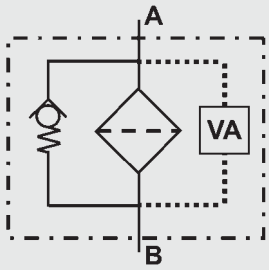

VA = clogging indicator

www.comoso.com

2. MODEL CODE (also order example)

NF BN/HC 2640 D P 10 D 2 . X /-L24

2.1 COMPLETE FILTER

Filter type
NF

Filter material of element
BN/HC: Betamicron® (BN4HC) P/HC: Paper V: Stainless steel fibre
ECO/N: ECOmicron® (ECON2) BN/AM: Betamicron®/Aquamicron®
W/HC: Stainless steel wire mesh AM: Aquamicron®

Size of filter or element
NF: 160, 240, 280, 330, 500, 750, 950, 1310, 1340, 1350, 2610, 2640, 2650, 5240, 7840, 10440

Operating pressure
D = 25 bar

Type and size of port

Type	Port	Filter size															
		160	240	280	330	500	750	950	1310	1340	1350	2610	2640	2650	5240	7840	10440
E	G1¼	●	●	●													
K	SAE DN 40 (1½")				●	●	●										
L	SAE DN 50 (2")							●			●			●			
M	SAE DN 65 (2½")							●			●			●			
N	SAE DN 80 (3")							●			●			●			
P	SAE DN 100 (4")							●	○	●	●	○	●	●	●	●	●

○ = Discontinued model

Filtration rating in µm
BN/HC, ECO/N, V: 3, 5, 10, 20 BN/AM: 3, 10 P/HC: 10, 20
W/HC: 25, 50, 100, 200 AM: 40

Type of clogging indicator
A with steel blanking plug in indicator port
BM visual
C electrical
D visual and electrical
for other clogging indicators see brochure no. 7.050../..

Type code (TKZ)
2

Modification number
X the latest version is always supplied

Supplementary details
B. special cracking pressure of bypass (e. g.: B6 = 6 bar); no details = standard 3 bar
EM manual vent with shut-off valve
EP permanent vent via Minimess hose
FF mounting flange for NF 1340/2640
KB without bypass valve
L... light with appropriate voltage (24, 48, 110, 220 Volt)
LED 2 light emitting diodes up to 24 Volt
only for clogging indicators type "D"
SB4 filling line with Ø 4 mm orifice
SL each filter housing can be shut-off individually
V FPM seals

2.2 REPLACEMENT ELEMENT

2600 R 010 BN4HC /-V

Size
0160, 0240, 0280, 0330, 0500, 0750, 0950, 1300, 2600

Type
R

Filtration rating in µm
BN4HC, ECON2, V: 003, 005, 010, 020 BN4AM: 003, 010 P/HC: 010, 020
W/HC: 025, 050, 100, 200 AM: 040

Filter material
BN4HC, ECON2, V, W/HC, BN4AM, AM, P/HC

Supplementary details
V (for descriptions, see point 2.1)

2.3 REPLACEMENT CLOGGING INDICATOR

VM 5 D . X /-L24

(IMPORTANT: the clogging indicator must not be screwed into the cover plate)

Type
VM differential pressure indicator

Pressure setting
2 2 bar (5 = 5 bar), others on request

Type of clogging indicator (see point 2.1)

Modification number
X the latest version is always supplied

Supplementary details
L..., LED, V (for descriptions, see point 2.1)

www.comoso.com

3. FILTER CALCULATION / SIZING

The total pressure drop of a filter at a certain flow rate Q is the sum of the housing Δp and the element Δp and is calculated as follows:

$$\Delta p_{total} = \Delta p_{housing} + \Delta p_{element}$$

$$\Delta p_{housing} = \text{(see Point 3.1)}$$

$$\Delta p_{element} = Q \cdot \frac{SK^*}{1000} \cdot \frac{viscosity}{30}$$

(*see point 3.2)

For ease of calculation, our Filter Sizing Program is available on request free of charge.

NEW: Sizing online at www.hydac.com

3.1 Δp-Q HOUSING CURVES BASED ON ISO 3968

The housing curves apply to mineral oil with a density of 0.86 kg/dm³ and a kinematic viscosity of 30mm²/s.
In this case, the differential pressure changes proportionally to the density.

NF 160, 240, 280

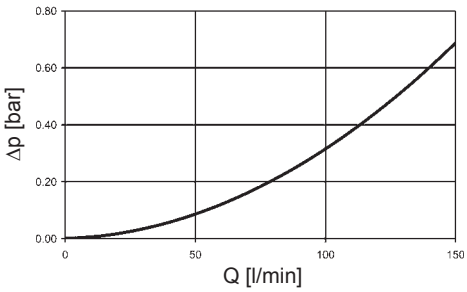

NF 330, 500, 750

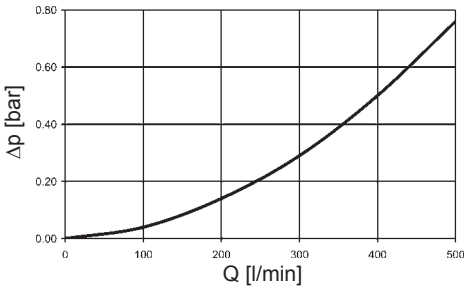

NF 1310, 2610
NF 1340, 2640
NF 950, 1350, 2650

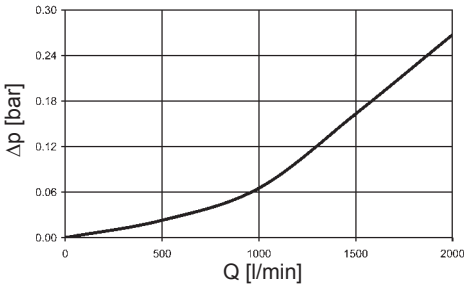

NF 5240

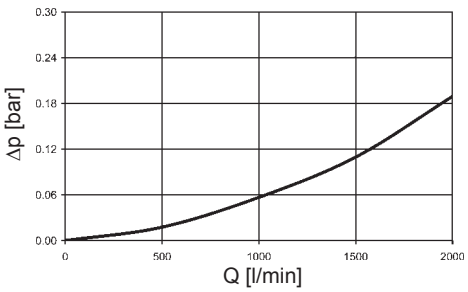

NF 7840

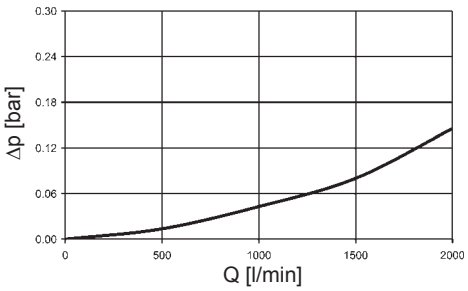

NF 10440

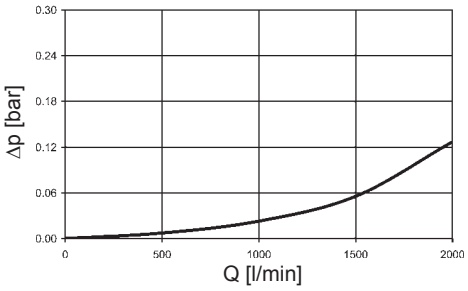

www.comoso.com

3.2 GRADIENT COEFFICIENTS (SK) FOR FILTER ELEMENTS

The gradient coefficients in mbar/(l/min) apply to mineral oils with a kinematic viscosity of 30 mm²/s. The pressure drop changes proportionally to the change in viscosity.

	V				W/HC	ECON2			
	3 µm	5 µm	10 µm	20 µm	–	3 µm	5 µm	10 µm	20 µm
160	4.9	3.5	2.4	1.5	0.338	9.5	5.9	3.8	2.9
240	3.2	2.6	1.7	1.2	0.225	6.2	3.8	2.6	1.8
280	1.4	1.1	0.7	0.5	0.115	3.1	2.2	1.6	1.0
330	2.1	1.7	1.1	0.8	0.162	4.2	2.7	1.7	1.2
500	1.5	1.2	0.8	0.5	0.108	3.0	1.9	1.3	0.8
750	0.6	0.5	0.3	0.2	0.049	1.3	0.9	0.6	0.4
950	0.7	0.6	0.4	0.2	0.054	1.2	0.8	0.5	0.4
1300	0.5	0.4	0.3	0.2	0.045	0.8	0.6	0.4	0.3
2600	0.3	0.2	0.1	0.1	0.018	0.4	0.3	0.2	0.1

BN4HC: 160 R...

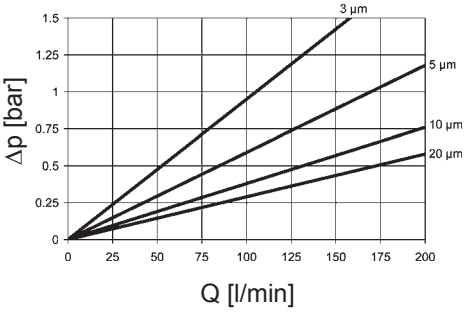

BN4HC: 240 R...

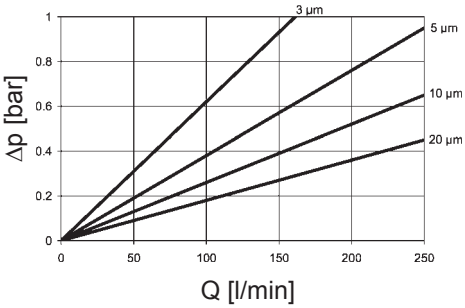

BN4HC: 280 R...

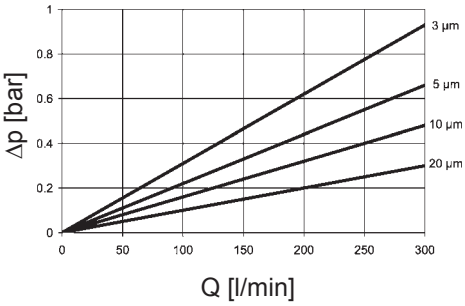

BN4HC: 330 R...

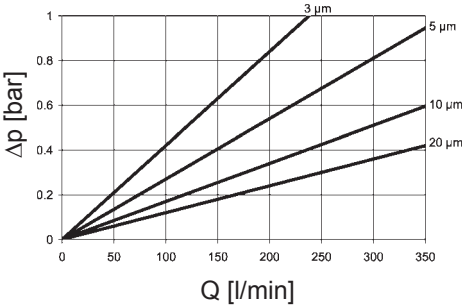

BN4HC: 500 R...

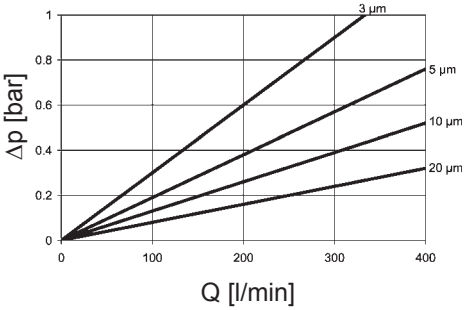

BN4HC: 750 R...

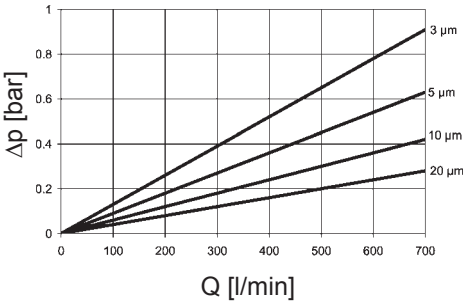

BN4HC: 950 R...

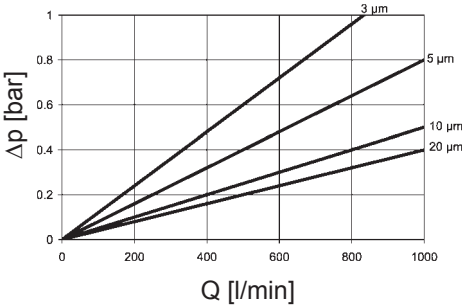

BN4HC: 1300 R...

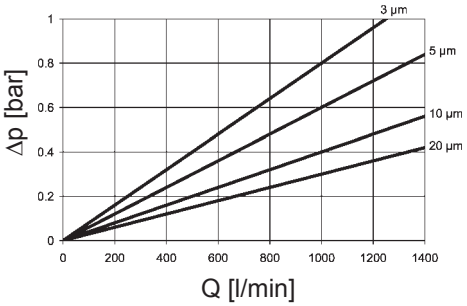

BN4HC: 2600 R...

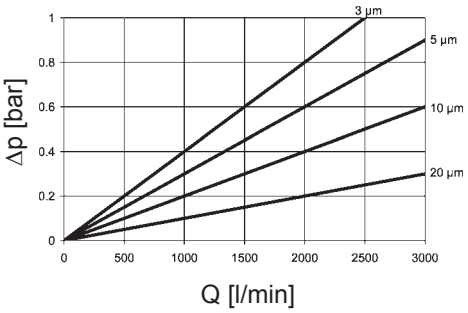

www.comoso.com

4. DIMENSIONS

NF 160-280

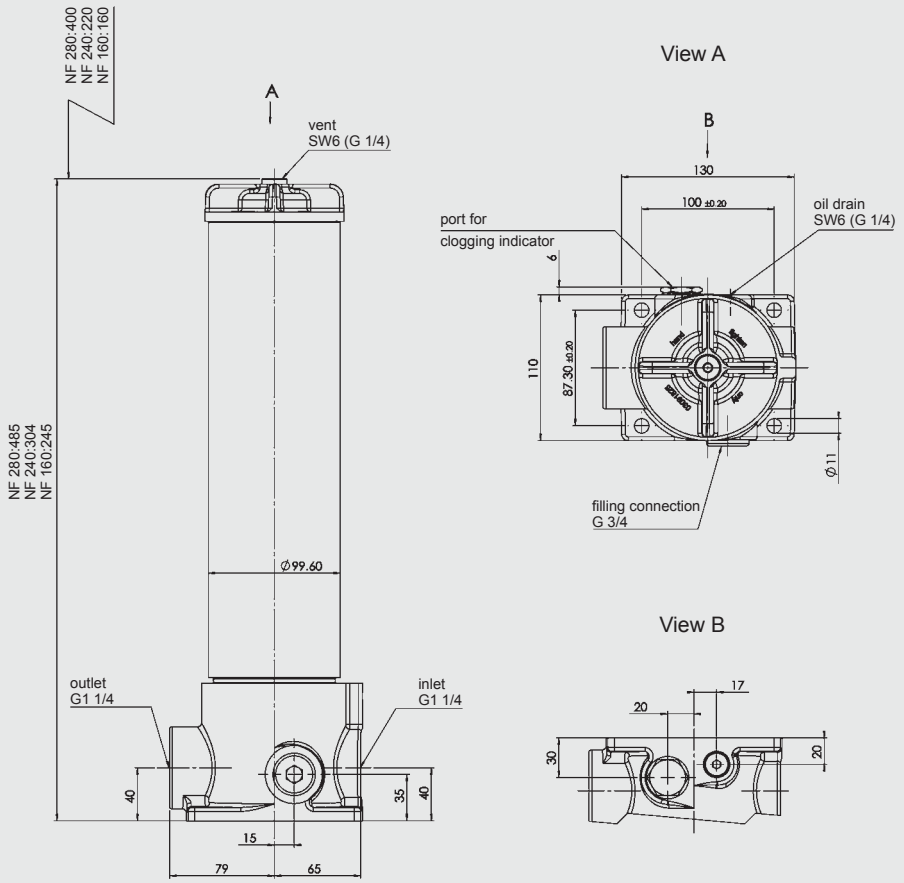

NF 330-750

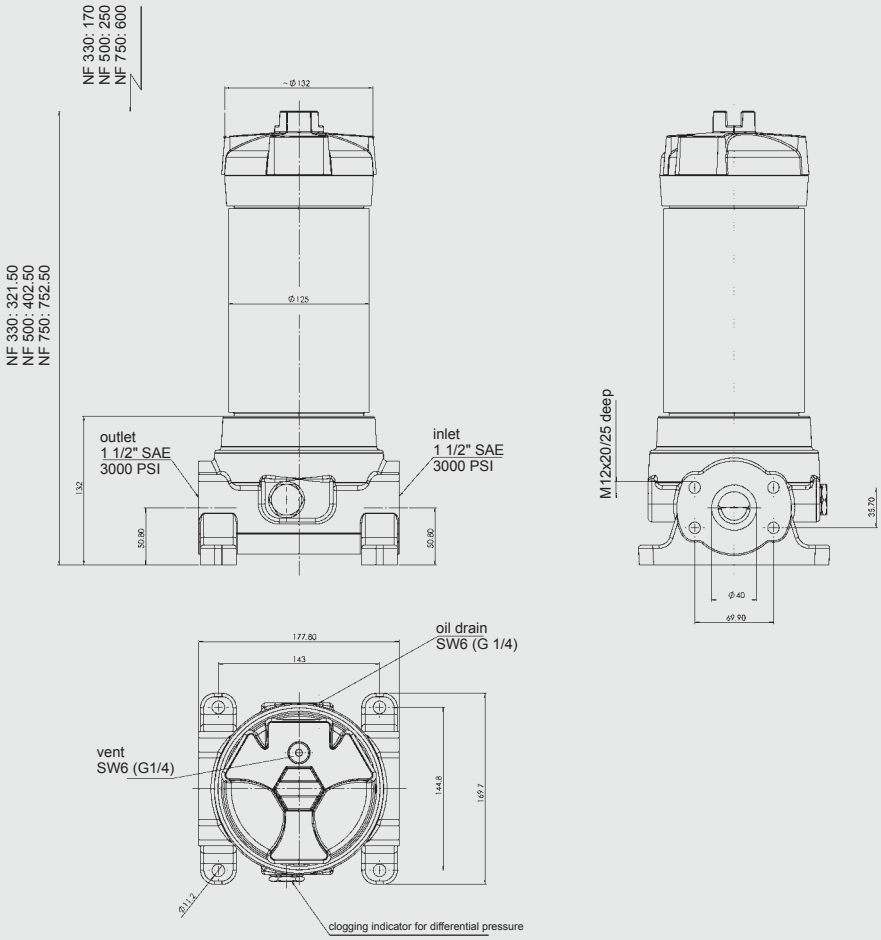

NF	No. of elements	Weight incl. element [kg]	Vol. of pressure chamber [l]
160	1x0160 R...	4.5	0.8
240	1x0240 R...	5.6	1.1
280	1x0280 R...	9.1	2.1

NF	No. of elements	Weight incl. element [kg]	Vol. of pressure chamber [l]
330	1x0330 R...	7.8	2.05
500	1x0500 R...	9.0	2.80
750	1x0750 R...	14.1	6.08

www.comoso.com

NF 950, 1350, 2650

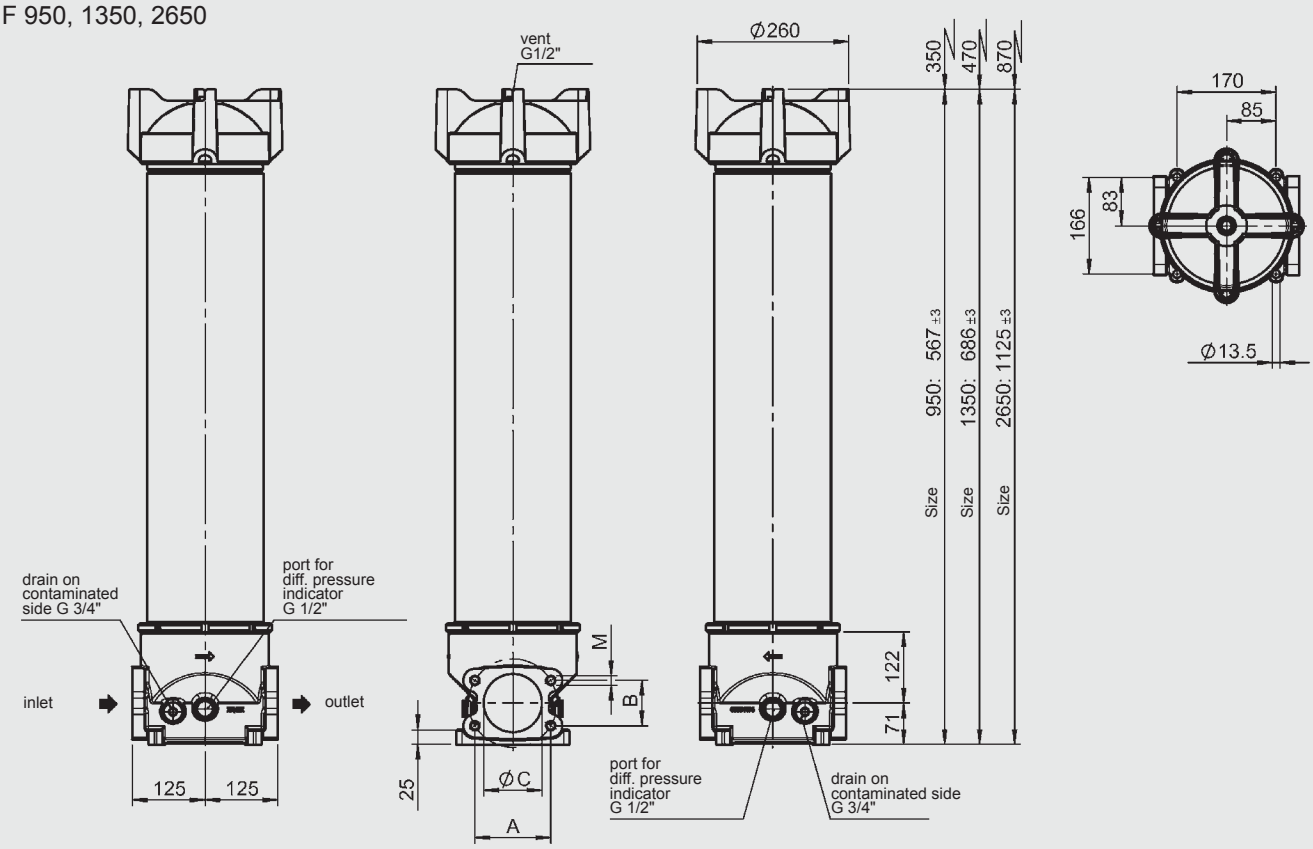

NF 1310/2610 ... 2.X (on request)

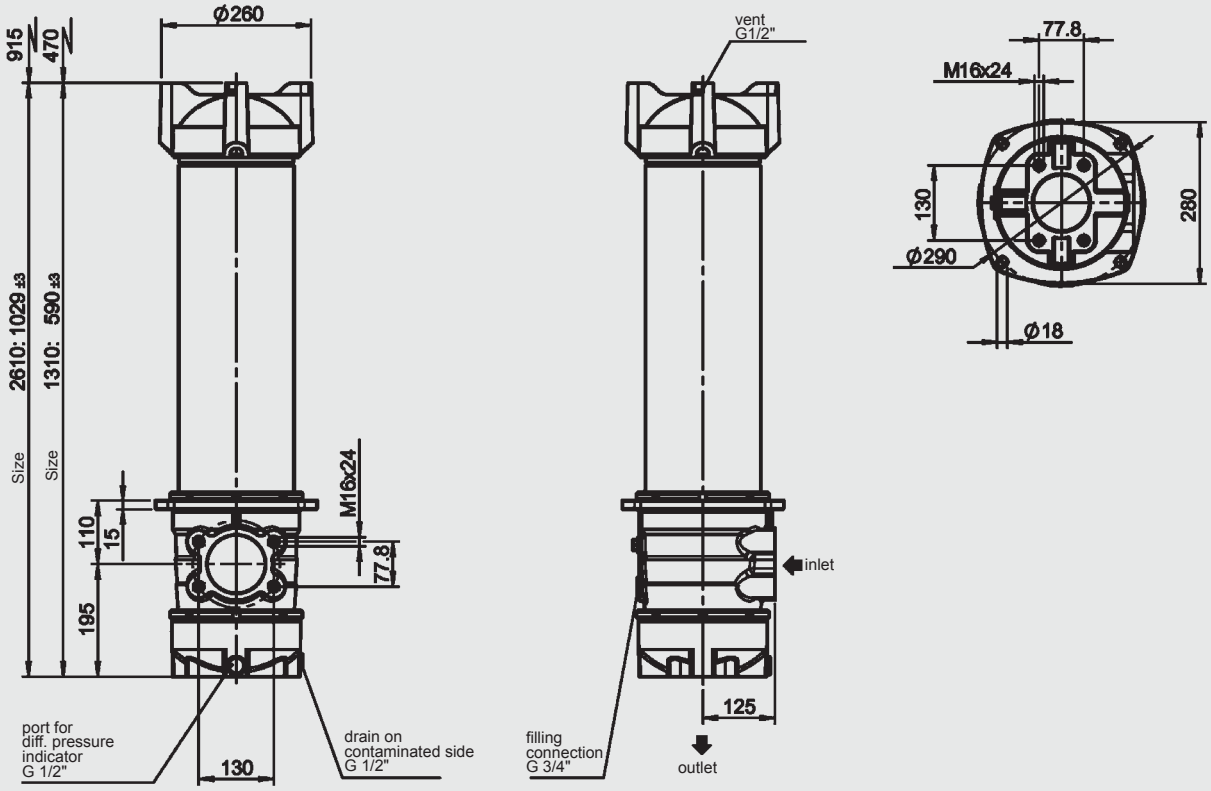

Port	A	B	ØC	M
SAE DN 50 (2")	77.8	42.9	50	M12x15
SAE DN 65 (2½")	88.9	50.8	65	M12x15
SAE DN 80 (3")	106.4	62.9	75	M16x24
SAE DN 100 (4")	130.2	77.8	100	M16

NF	No. of elements	Weight incl. element [kg]	Vol. of pressure chamber [l]
950	1x0950 R...	16	10
1350	1x1300 R...	18	13
2650	1x2600 R...	25	25

NF	No. of elements	Weight incl. element [kg]	Vol. of pressure chamber [l]
1310...2.X	1x1300 R...	17	14

NF	No. of elements	Weight incl. element [kg]	Vol. of pressure chamber [l]
2610...2.X	1x2600 R...	23	25

www.comoso.com

NF 1340/2640 ... 2.X/-FF

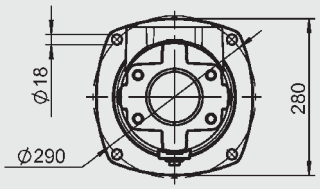

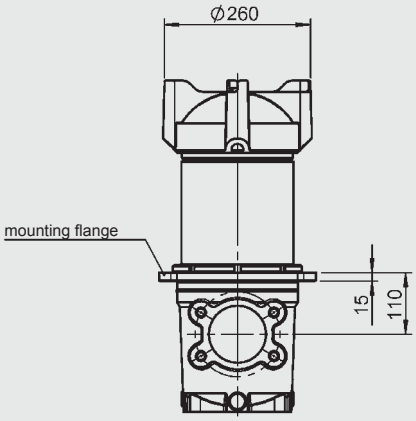

NF 1340/2640 ... 2.X

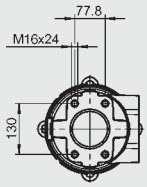

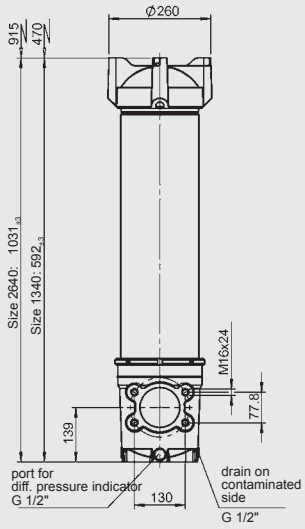

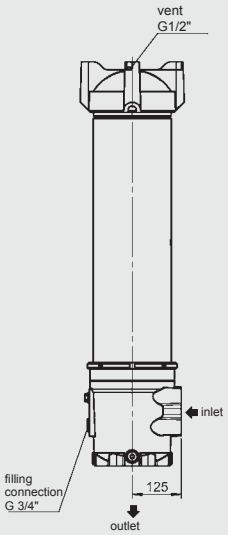

NF 5240 ... 2.X

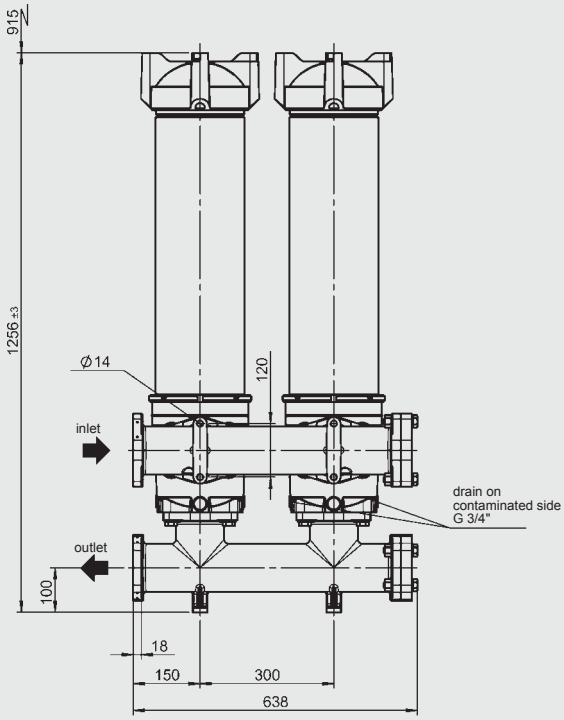

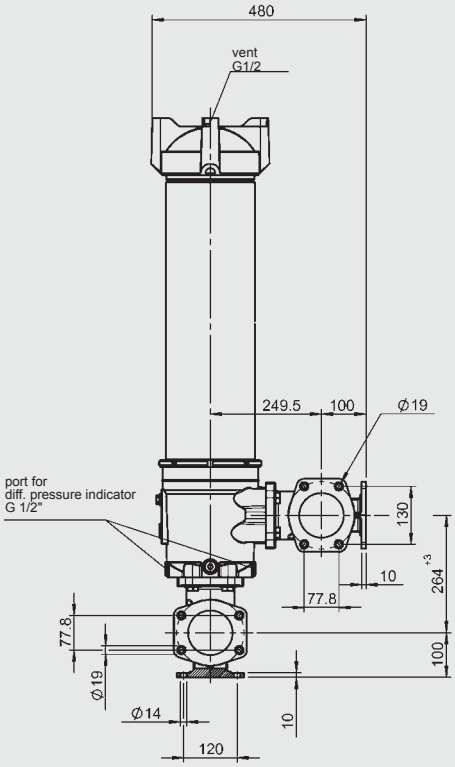

NF	No. of elements	Weight incl. element [kg]	Vol. of pressure chamber [l]
1340...2.X	1x1300 R...	17	14

NF	No. of elements	Weight incl. element [kg]	Vol. of pressure chamber [l]
5240...2.X	2x2600 R...	90	60

NF	No. of elements	Weight incl. element [kg]	Vol. of pressure chamber [l]
2640...2.X	1x2600 R...	23	25

www.comoso.com

NF 7840 2.x

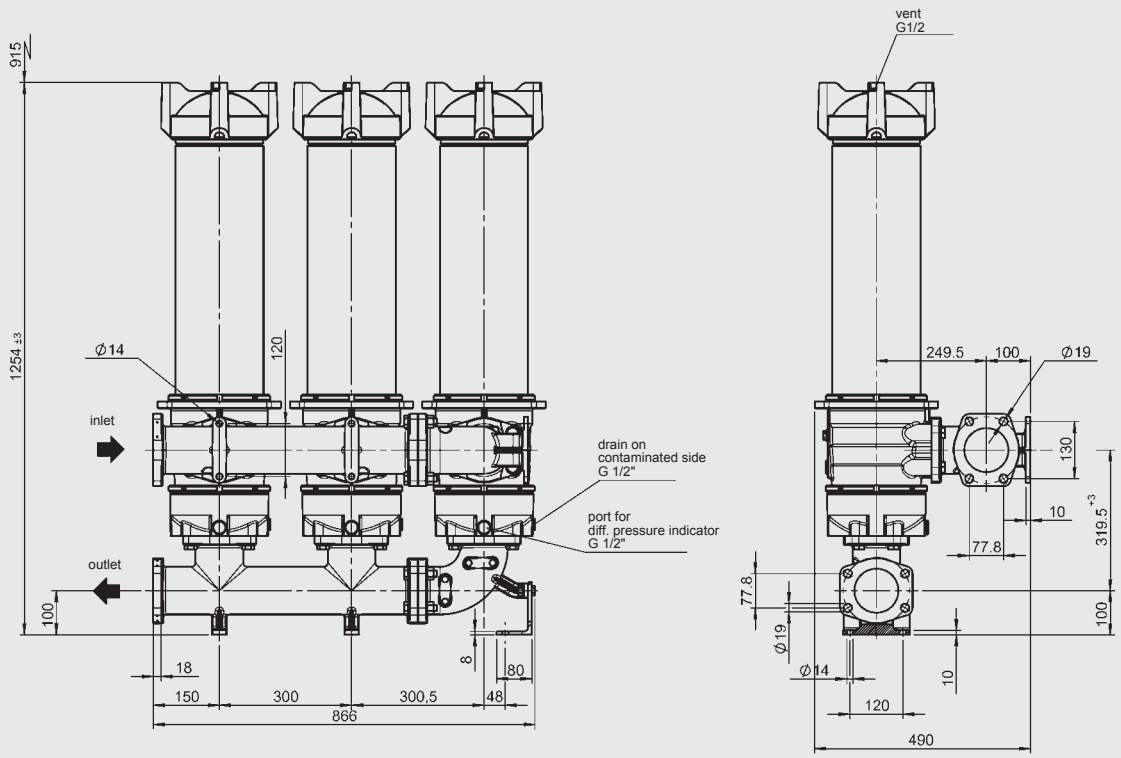

NF 10440 2.x

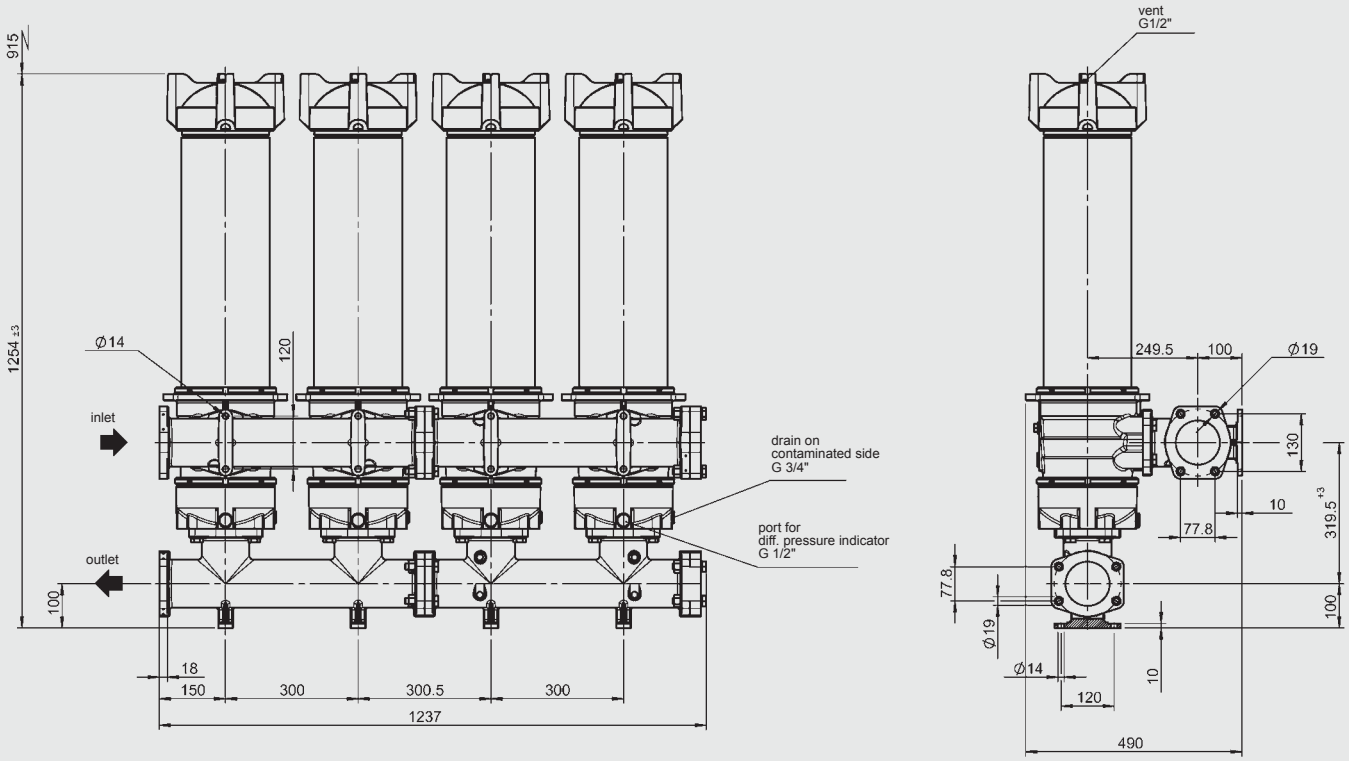

NF	No. of elements	Weight incl. element [kg]	Vol. of pressure chamber [l]
7840	3x2600 R...	125	88

NF	No. of elements	Weight incl. element [kg]	Vol. of pressure chamber [l]
10440	4x2600 R...	180	120

NOTE

The information in this brochure relates to the operating conditions and applications described.
For applications or operating conditions not described, please contact the relevant technical department.
Subject to technical modifications.

HYDAC FILTERTECHNIK GMBH
Industriegebiet
D-66280 Sulzbach/Saar, Germany
Tel.: 0 68 97 / 509-01
Fax: 0 68 97 / 509-300
Internet: www.hydac.com
E-mail: filter@hydac.com

www.comoso.com

Inline Filters LFR
up to 250 l/min, up to 120 bar

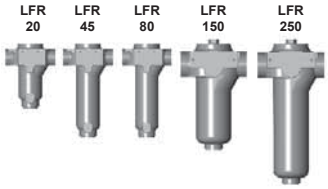

ELEMENT FLOW DIRECTION FROM IN TO OUT

1. TECHNICAL SPECIFICATIONS

1.1 FILTER HOUSING

Construction

The filter housings are designed in accordance with international regulations. They consist of a filter housing and a screw-on cover plate. The element is top-removable.

Standard equipment:

- mounting holes in the housing
- magnetic core built into cover plate
- without bypass valve
- oil drain plug

1.2 FILTER ELEMENTS

HYDAC filter elements are validated and their quality is constantly monitored according to the following standards:

- ISO 2941, ISO 2942, ISO 2943 ISO 3968, ISO 11170, ISO 16889

Contamination retention capacities in g

	Glass fibre (ULP)		
	5 µm	10 µm	25 µm
20	1.45	2.61	2.9
45	3.35	6.03	6.7
80	4.18	7.51	8.35
150	5.25	9.45	10.5
250	8.5	15.3	17

	Glass fibre with pre-filter (UHC)		
	5 µm	10 µm	20 µm
20	4.64	6.96	7.83
45	10.72	16.08	18.09
80	13.36	20.04	22.55
150	16.8	25.2	28.35
250	27.2	40.8	45.9

Filter elements are available with the following pressure stability values:

Glass fibre (ULP):	6 bar
Glass fibre with pre-filter (UHC):	6 bar
Wire mesh (WR):	6 bar

Other filtration ratings on request

1.3 SEALS

NBR (= Perbunan)

1.4 SPECIAL MODELS

- Port for clogging indicator
- Without magnetic core
- Bypass valve built into the head
- Seals in FPM, EPDM

FILTER SPECIFICATIONS

Nominal pressure	120 bar
Temperature range	-10 °C to +120 °C
Material of filter housing	EN-GJS
Material of cover plate	EN-GJS: LFR 20 to 80 9SMn28k: LFR 150 to 250
Type of clogging indicator	VM (differential pressure measurement up to 210 bar operating pressure)
Pressure setting of the clogging indicator	2 bar (others on request)
Bypass cracking pressure (optional)	2.5 bar (others on request)

Inline Filter LPFR
up to 250 l/min, up to 25 bar

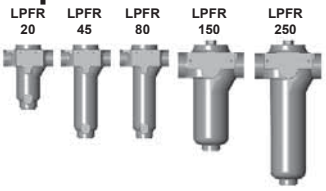

ELEMENT FLOW DIRECTION FROM IN TO OUT

FILTER SPECIFICATIONS

Nominal pressure	25 bar
Temperature range	-10 °C to +120 °C
Material of filter housing	EN-GJS: LPFR 20 to 250
Material of cover plate	EN-GJS: LPFR 20 to 80 EN-GJL: LPFR 150 to 250
Type of clogging indicator	VM (differential pressure measurement up to 210 bar operating pressure)
Pressure setting of the clogging indicator	2 bar (others on request)
Bypass cracking pressure (optional)	2.5 bar (others on request)

Inline Filter MDFR
up to 250 l/min, up to 250 bar

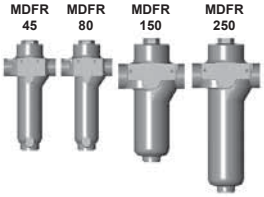

ELEMENT FLOW DIRECTION FROM IN TO OUT

FILTER SPECIFICATIONS

Nominal pressure	250 bar
Temperature range	-10 °C to +120 °C
Material of filter housing	EN-GJS
Material of cover plate	S355JR: MDFR 45 to 80 EN-GJS: MDFR 150 to 250
Type of clogging indicator	VD (differential pressure measurement up to 400 bar operating pressure)
Pressure setting of the clogging indicator	2 bar (others on request)
Bypass cracking pressure (optional)	2.5 bar (others on request)

2. MODEL CODE
2.1 COMPLETE FILTER

Type	Filter material of element	Size	Operating pressure	Port	Filtration rating	Clogging indicator (VA)	Type code	Modification number	Supplementary details
LFR **LPFR** **MDFR**	**ULP**=Glass fibre **UHC**=Glass fibre with pre-filter **WR**=Wire mesh	20* 45 80 150 250	**D**=25 bar (only LPFR) **I**=120 bar (only LFR) **M**=250 bar (only MDFR)	**B**=G 1/2 **C**=G 3/4 **D**=G1 **F**=G1 1/2	5 10 20(UHC) 25(ULP)	**W**=no port for indicator **B**=visual **C**=electrical **D**=visual / electrical	**1**=indic. on right in flow direction **2**=indic. on left in flow direction **3**=no indic.	**.x=** the latest version is always supplied	**-V=** FPM direction (Viton) **-B=** special bypass cracking pressure **-OM=** without magnetic core

* Size 20 only possible for LPFR and LFR!

3. DIMENSIONS

LFR 20 - 80

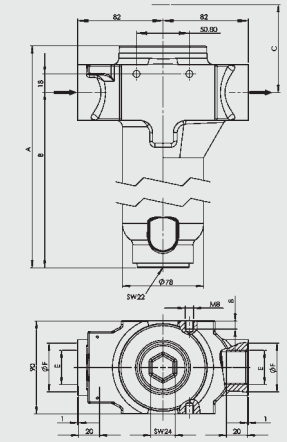

LFR 150 - 250

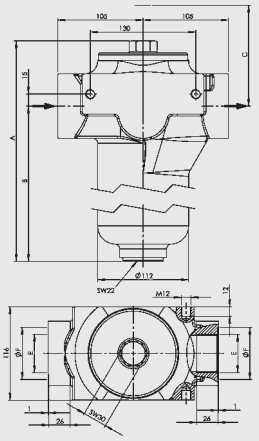

LFR	A	B	C	E	F Ø	Weight incl. element [kg]
20	212	167	180	G ½	34	5.3
45	312	267	250	G ¾	42	5.8
80	312	267	280	G 1	47	6.6
150	354	273	335	G 1½	68	14.2
250	454	373	435	G 1½	65	15.0

LPFR 20 - 80

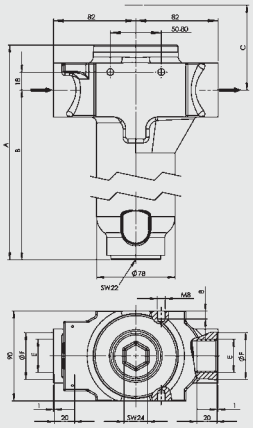

LPFR 150 - 250

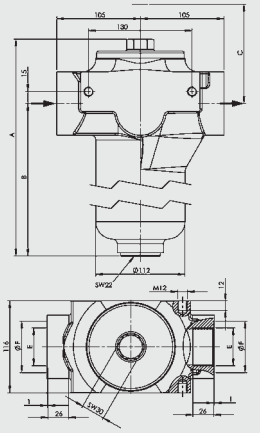

LPFR	A	B	E	F Ø	Weight incl. element [kg]
20	212	167	G ½	34	5.3
45	312	267	G ¾	42	5.8
80	312	267	G 1	47	6.6
150	354	273	G 1½	68	14.2
250	454	373	G 1½	65	15.0

MDFR 40 - 80

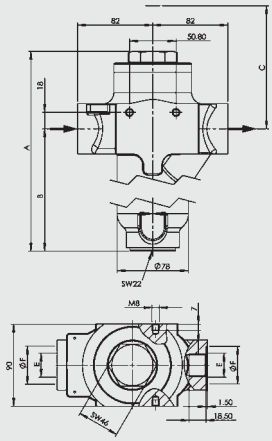

MDFR 150 - 250

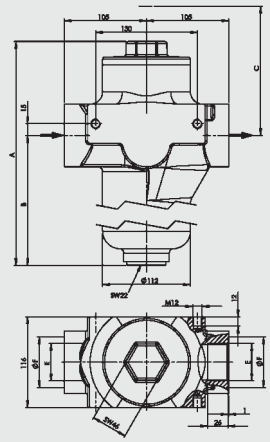

MDFR	A	B	C	E	F Ø	Weight incl. element [kg]
45	360	274	275	G ¾	42	7.9
80	360	274	305	G 1	47	8.6
150	405	282	365	G 1 ½	65	18.4
250	505	382	465	G 1½	68	19.0

NOTE

The information in this brochure relates to the operating conditions and applications described.
For applications or operating conditions not described, please contact the relevant technical department.
Subject to technical modifications.

HYDAC FILTERTECHNIK GMBH
Industriegebiet
D-66280 Sulzbach/Saar
Tel.: 0 68 97 / 509-01
Fax: 0 68 97 / 509-300
Internet: www.hydac.com
E-Mail: filter@hydac.com

www.comoso.com

Inline Filter FLN to DIN 24550

up to 400 l/min, up to 25 bar

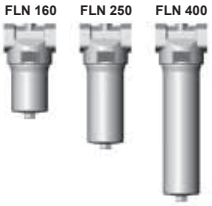

1. TECHNICAL SPECIFICATIONS

1.1 FILTER HOUSING

Construction

The filter housings are designed in accordance with international regulations. They consist of a filter head and a screw-in filter bowl.

Standard equipment:

- without bypass valve
- oil drain plug
- connection for a clogging indicator

1.2 FILTER ELEMENTS

HYDAC filter elements are validated and their quality is constantly monitored according to the following standards:

- ISO 2941
- ISO 2942
- ISO 2943
- ISO 3724
- ISO 3968
- ISO 11170
- ISO 16889

Contamination retention capacities in g

	Betamicron® BN4HC			
FLN	3 µm	6 µm	10 µm	25 µm
160	27.5	29.3	33.1	36.7
250	46.0	49.0	55.2	61.3
400	76.2	81.3	91.4	101.5

Filter elements are available with the following pressure stability values:

Betamicron® (BN4HC): 20 bar
Wire mesh (W/HC): 20 bar

1.3 FILTER SPECIFICATIONS

Nominal pressure	25 bar
Fatigue strength	At nominal pressure 10^6 cycles from 0 to nominal pressure
Temperature range	-30 °C to +100 °C
Material of filter head	Aluminium
Material of filter bowl	Aluminium
Type of indicator	VM (Diff. pressure indicator up to 210 bar operating pressure) VD (Diff. pressure indicator up to 420 bar operating pressure - only for types LE and LZ)
Pressure setting of the clogging indicator	5 bar (others on request)
Bypass cracking pressure (optional)	3.5 bar or 7 bar (others on request)

1.4 SEALS

NBR (= Perbunan)

1.5 INSTALLATION

As inline filter

1.6 SPECIAL MODELS AND ACCESSORIES

With bypass valve

1.7 SPARE PARTS

See Original Spare Parts List

1.8 CERTIFICATES AND APPROVALS

On request

1.9 COMPATIBILITY WITH HYDRAULIC FLUIDS ISO 2943

- Hydraulic oils H to HLPD DIN 51524
- Lubrication oils DIN 51517, API, ACEA, DIN 51515, ISO 6743
- Compressor oils DIN 51506
- Biodegradable operating fluids VDMA 24568 HETG, HEES, HEPG
- Operating fluids with high water content (>50% water content) on request

1.10 MAINTENANCE INSTRUCTIONS

- Filter housings must be earthed.
- When using electrical clogging indicators, the electrical power supply to the system must be switched off before removing the clogging indicator connector.

Symbol for hydraulic systems

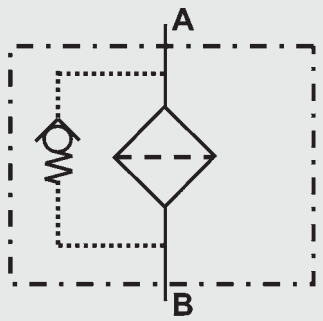

www.comoso.com

2. MODEL CODE (also order example)

FLN BN/HC 250 D F 10 D 1 . X /-L24

2.1 COMPLETE FILTER

Filter type
FLN

Filter material of element
BN/HC Betamicron® (BN4HC)
W/HC Stainless steel wire mesh

Size of filter or element
FLN: 160, 250, 400

Operating pressure
D = 25 bar

Type and size of port
to DIN 24550 (●), possible ports (X)

Type	Port	Filter size		
		160	250	400
E	G 1¼	●	X	X
F	G 1½	X	●	X
K	DN 38*	X	X	●

*Flange SAE 1½", 3000 PSI

Filtration rating in µm
BN/HC: 3, 6, 10, 25
W/HC: 25, 50, 100, 200

Type of clogging indicator
Y plastic blanking plug in indicator port
A steel blanking plug in indicator port
B visual
C electrical
D visual and electrical
LZ visual-mechanical / electrical
] for other clogging indicators, see brochure no. 7.050../..

Type code
1

Modification number
X the latest version is always supplied

Supplementary details
A. pressure setting (e.g. A2 = 2 bar)
B. bypass cracking pressure (e. g.: B3.5 = 3.5 bar; B7 = 7 bar); no details = without bypass valve
L... light with appropriate voltage (24, 48, 110, 220 Volt)
LED 2 light-emitting diodes 24 Volt
] only for clogging indicators Type "D"
AV LZ indicator with plug to AUDI and VW specifications
BO LZ indicator with plug and pin connections to BMW and Opel specification (M12x1)
CN LZ indicator with plug to DIN 43651 with 3 LEDs (CNOMO specification)
DB LZ indicator with plug to DIN 43651 with 3 LEDs (Daimler-Benz specification)
D4C LZ indicator with plug and connector to Daimler-Chrysler specification and cold start suppression 30 °C
BO-LED as for BO, but with diode strip
V FPM seals
W suitable for HFA and HFC emulsions

2.2 REPLACEMENT ELEMENT

0250 DN 010 BN4HC /-V

Size
0160, 0250, 0400

Type
DN

Filtration rating in µm
BN4HC : 003, 006, 010, 025
W/HC : 025, 050, 100, 200

Filter material
BN4HC, W/HC

Supplementary details
V, W (for descriptions, see point 2.1)

2.3 REPLACEMENT CLOGGING INDICATOR

VM 5 D . X /-L24

Type of indicator
VM Differential pressure indicator up to 210 bar operating pressure
VD Differential pressure indicator up to 420 bar operating pressure (only for types LE and LZ)

Pressure setting
5 standard 5 bar, others on request

Type of clogging indicator
D (see Point 2.1)

Modification number
X the latest version is always supplied

Supplementary details
L..., LED, V, W (for descriptions, see point 2.1)

www.comoso.com

3. FILTER CALCULATION / SIZING

The total pressure drop of a filter at a certain flow rate Q is the sum of the housing Δp and the element Δp and is calculated as follows:

$$\Delta p_{total} = \Delta p_{housing} + \Delta p_{element}$$

$$\Delta p_{housing} = \text{(see Point 3.1)}$$

$$\Delta p_{element} = Q \cdot \frac{SK^*}{1000} \cdot \frac{viscosity}{30}$$

(*see point 3.2)

For ease of calculation, our Filter Sizing Program is available on request free of charge.

NEW: Sizing online at www.hydac.com

3.1 Δp-Q HOUSING CURVES BASED ON ISO 3968

The housing curves apply to mineral oil with a density of 0.86 kg/dm³ and a kinematic viscosity of 30 mm²/s.
In this case, the differential pressure changes proportionally to the density.

FLN 160, 250, 400

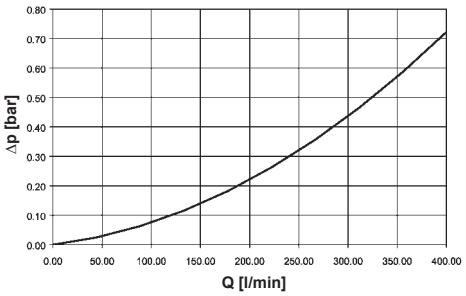

3.2 GRADIENT COEFFICIENTS (SK) FOR FILTER ELEMENTS

The gradient coefficients in mbar/(l/min) apply to mineral oils with a kinematic viscosity of 30 mm²/s. The pressure drop changes proportionally to the change in viscosity.

FLN	BN4HC				W/HC
	3 µm	6 µm	10 µm	25 µm	–
160	7.9	5.1	3.4	2.6	0.168
250	5.1	3.2	2.1	1.7	0.101
400	3.2	2.0	1.3	1.0	0.068

BN4HC: FLN 160

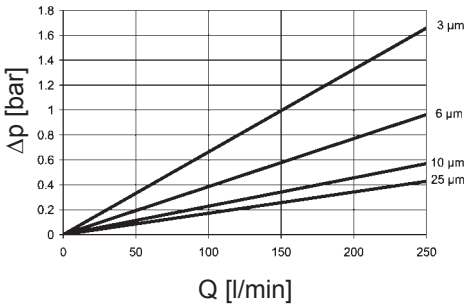

BN4HC: FLN 250

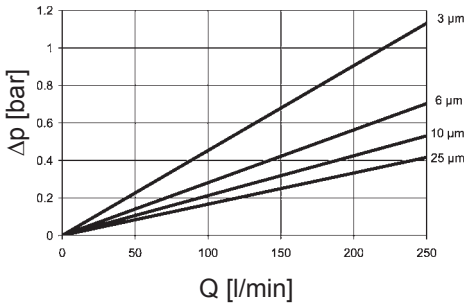

BN4HC: FLN 400

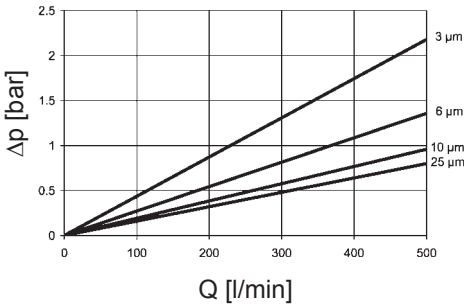

www.comoso.com

4. DIMENSIONS

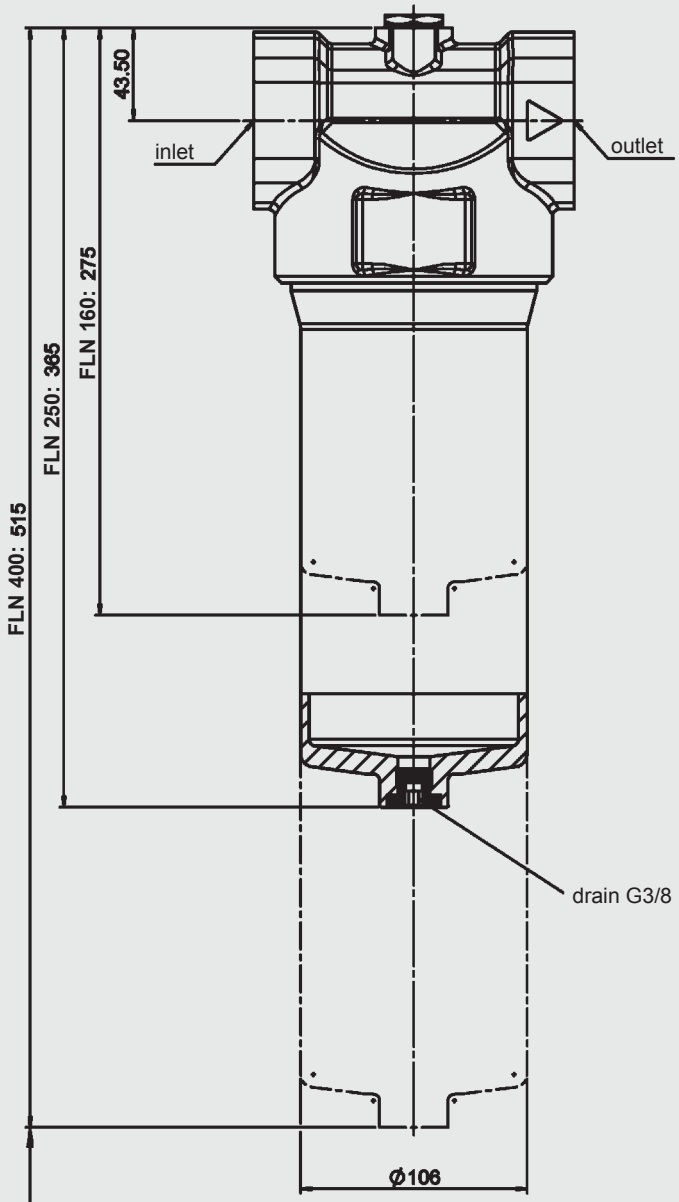

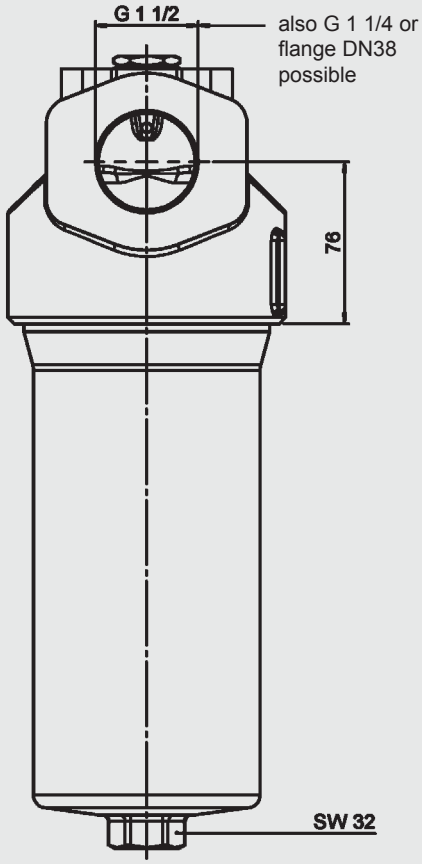

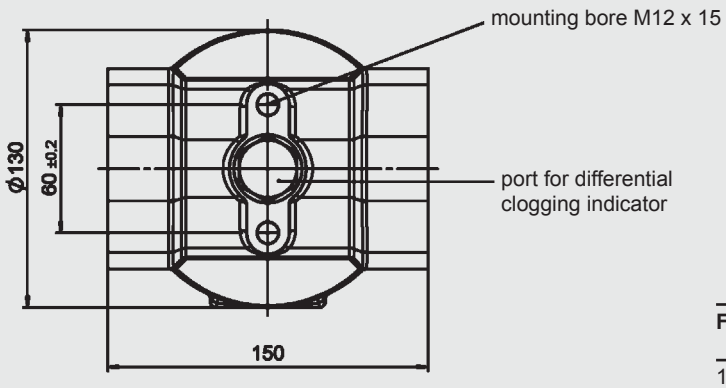

FLN	Weight incl. element [kg]	Vol. of pressure chamber [l]
160	4.3	1.4
250	4.9	2.0
400	5.9	3.1

NOTE

The information in this brochure relates to the operating conditions and applications described.
For applications or operating conditions not described, please contact the relevant technical department.
Subject to technical modifications.

HYDAC FILTERTECHNIK GMBH
Industriegebiet
D-66280 Sulzbach/Saar, Germany
Tel.: 0 68 97 / 509-01
Fax: 0 68 97 / 509-300
Internet: www.hydac.com
E-mail: filter@hydac.com

www.comoso.com

Inline Filters RFLR

Element flow direction from in to out up to 25 bar, up to 1200 l/min

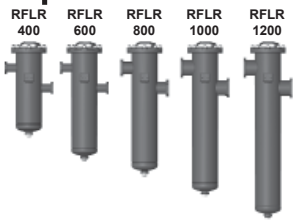

1. TECHNICAL SPECIFICATIONS

1.1 FILTER HOUSING

Construction

The filter housings are designed in accordance with international regulations. They consist of a filter housing and cover plate. The element is top-removable.

Standard equipment:

- mounting holes in the housing
- oil drain plug
- magnetic core built into cover plate
- with bypass valve
- connection for a clogging indicator

1.2 FILTER ELEMENTS

HYDAC filter elements are validated and their quality is constantly monitored according to the following standards:

- ISO 2941
- ISO 2942
- ISO 2943
- ISO 3968
- ISO 11170
- ISO 16889

Contamination retention capacities in g

	Glass fibre (UHC)		
RFLR	5 µm	10 µm	20 µm
400	192	288	324
600	272	408	459
800	368	552	621
1000	438	658	739
1200	544	816	918

Filter elements are available with the following pressure stability values:

Glass fibre (UHC) for biodegradable oils: 6 bar

Wire mesh (WPI): 6 bar

Other filtration ratings on request.

1.3 FILTER SPECIFICATIONS

Nominal pressure	25 bar
Temperature range	-30 °C to +120 °C
Material of filter housing	Steel
Material of cover plate	Spheroidal graphite iron
Type of clogging indicator	VM (differential pressure measurement up to 210 bar operating pressure)
Pressure setting of the clogging indicator	2 bar (others on request)
Bypass cracking pressure	3 bar (others on request)

1.4 SEALS

NBR (= Perbunan)

1.5 INSTALLATION

As inline filter

1.6 SPECIAL MODELS AND ACCESSORIES

- Port for clogging indicator
- Without magnetic core
- Seals in FPM

1.7 SPARE PARTS

See Original Spare Parts List

1.8 COMPATIBILITY WITH HYDRAULIC FLUIDS ISO 2943

- Hydraulic oils H to HLPD DIN 51524
- Lubrication oils DIN 51517, API, ACEA, DIN 51515, ISO 6743
- Compressor oils DIN 51506
- Biodegradable operating fluids VDMA 24568 HETG, HEES, HEPG

1.9 IMPORTANT INFORMATION

- Filter housings must be earthed.
- When using electrical clogging indicators, the electrical power supply to the system must be switched off before removing the clogging indicator connector.

Symbol for hydraulic systems

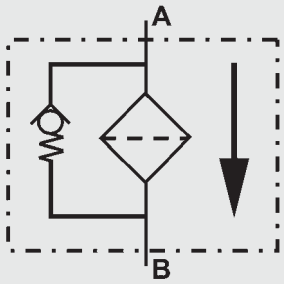

www.comoso.com

2. MODEL CODE (also order example)

RFLR UHC 800 D M 10 W 1.0 /-V

2.1 COMPLETE FILTER

Filter type
RFLR

Filter material of element
UHC Glass fibre for biodegradable operating fluids
WPI Wire mesh

Size of filter or element
RFLR: 400, 600, 800, 1000, 1200

Operating pressure
D = 25 bar

Type and size of connection

Type	Connection	Filter size				
		400	600	800	1000	1200
L	SAE DN 50	●	●			
M	SAE DN 80			●		
P	SAE DN 100				●	●

Filtration rating in µm
UHC 5, 10, 20
WPI 40, 60, 80
others on request

Type of clogging indicator
W without port (no clogging indicator)
B visual
C electrical
D visual and electrical

for other clogging indicators, see brochure no. 7.050../..

Type code
1

Modification number
X the latest version is always supplied

Supplementary details
V FPM seals
OM without magnetic core

2.2 REPLACEMENT ELEMENT

0800 R 010 UHC /-V

Size
0400, 0600, 0800, 1000, 1200

Type
R

Filtration rating in µm
UHC: 005, 010, 020
WPI: 040, 060, 080
others on request

Filter material
UHC Glass fibre for biodegradable operating fluids
WPI Wire mesh

Supplementary details
V (for descriptions, see point 2.1)

2.3 REPLACEMENT CLOGGING INDICATOR

VM 2 C . X /-V

Type of indicator
VM differential pressure indicator

Pressure setting
2 standard (others on request)

Type of clogging indicator (see Point 2.1)

Modification number
X the latest version is always supplied

Supplementary details
V (for descriptions, see point 2.1)

www.comoso.com

3. FILTER CALCULATION / SIZING

3.1 GRAPHS FOR COMPLETE FILTER

The total pressure drop graphs apply to mineral oil with a density of 0.86 kg/dm³ and a kinematic viscosity of 30mm²/s.

RFLR 400: UHC

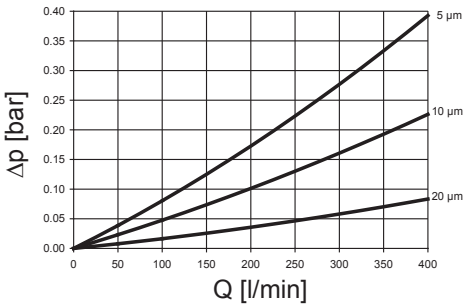

RFLR 600: UHC

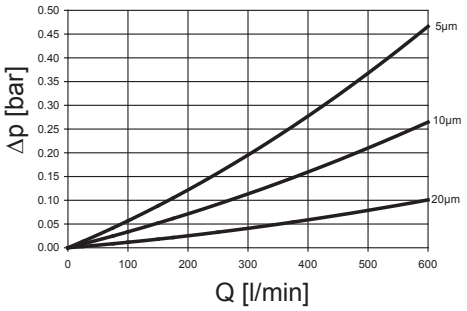

RFLR 800: UHC

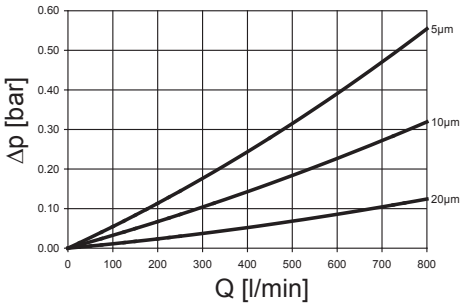

RFLR 1000: UHC

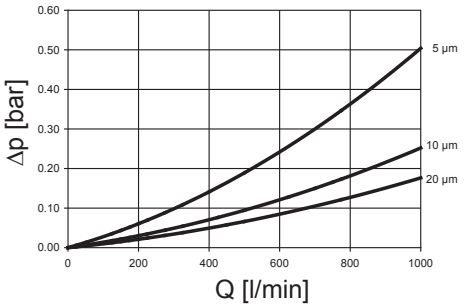

RFLR 1200: UHC

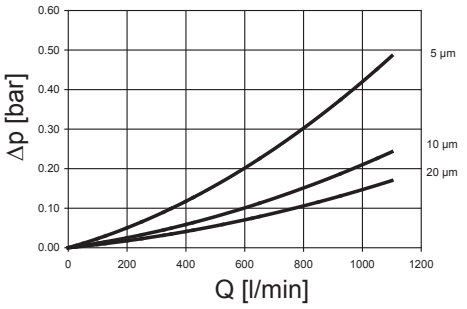

Other curves on request

4. DIMENSIONS

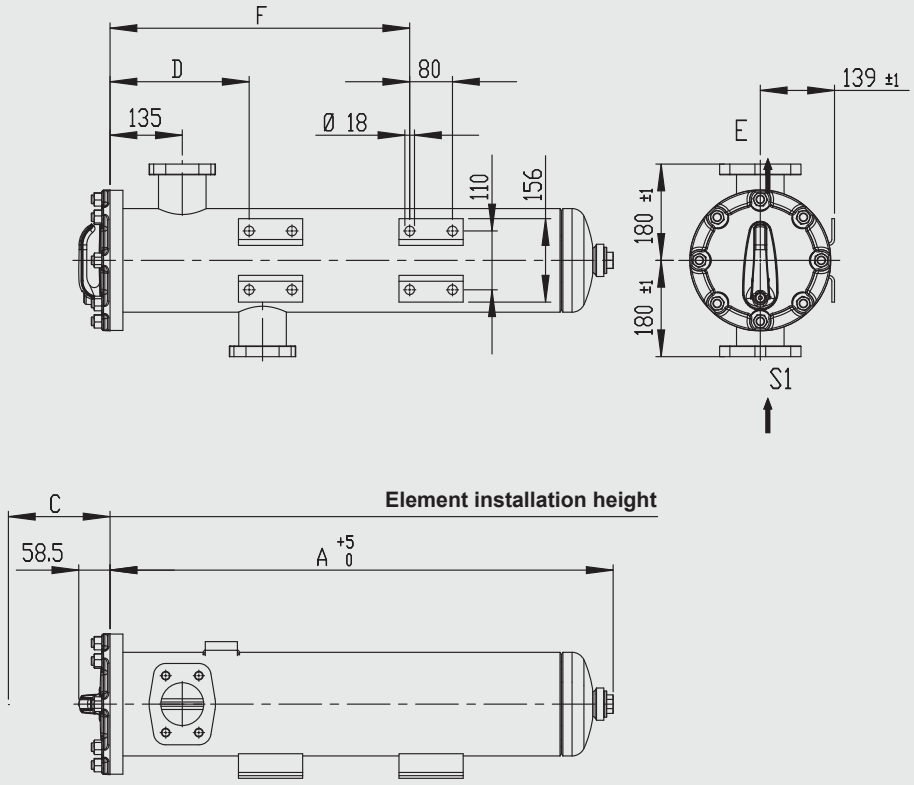

Type	Connection E + S	A	C	D	F	Weight incl. element [kg]
RFLR 400	SAE DN 50 (2")	650	400	120	–	33.5
RFLR 600	SAE DN 50 (2")	828	580	220	520	37.8
RFLR 800	SAE DN 80 (3")	940	700	260	560	42.8
RFLR 1000	SAE DN 100 (4")	1094	850	260	560	47.9
RFLR 1200	SAE DN 100 (4")	1260	1010	260	560	52.3

www.comoso.com

NOTES

NOTE

The information in this brochure relates to the operating conditions and applications described.
For applications and operating conditions not described, please contact the relevant technical department.
Subject to technical modifications.

HYDAC FILTERTECHNIK GMBH
Industriegebiet
D-66280 Sulzbach/Saar, Germany
Tel.: 0 68 97 / 509-01
Fax: 0 68 97 / 509-300
Internet: www.hydac.com
E-mail: filter@hydac.com

www.comoso.com

Inline Filter RFL Cast Version

up to 1300 l/min, up to 40 bar

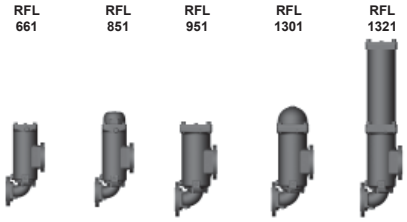

1. TECHNICAL SPECIFICATIONS

1.1 FILTER HOUSING

Construction

The filter housings are designed in accordance with international regulations. They consist of a two-piece filter housing with a bolt-on cover plate.

Standard equipment:

- connections for venting and draining
- connection for a clogging indicator

1.2 FILTER ELEMENTS

HYDAC filter elements are validated and their quality is constantly monitored according to the following standards:

- ISO 2941
- ISO 2942
- ISO 2943
- ISO 3724
- ISO 3968
- ISO 11170
- ISO 16889

Contamination retention capacities in g

		Betamicron® (BN4HC)			
RFL	Elements	3 µm	5 µm	10 µm	20 µm
66x	1x0660 R	87.1	96.5	116.1	131.3
85x	1x0850 R	112.1	124.2	149.5	169.1
95x	1x0950 R	130.0	144.1	173.3	196.1
130x	1x1300 R	181.0	200.7	241.4	273.1
132x	1x2600 R	369.4	409.4	492.5	557.2

Filter elements are available with the following pressure stability values:

Betamicron® (BN4HC):	20 bar
Paper (P/HC):	10 bar
Wire mesh (W/HC):	20 bar
Stainless steel fibre (V):	30 bar
Betamicron®/Aquamicron® (BN4AM):	10 bar
Aquamicron® (AM):	10 bar

1.3 FILTER SPECIFICATIONS

Nominal pressure	25 bar 40 bar (RFL 662 to 1322 acc. to AD)
Temperature range	-10 °C to +100 °C
Material of filter housing and cover plate	EN-GJS-400-15 : RFL 661 to 1321 GP 240 GH+N : RFL 662 to 1322 1.4581/4571 : RFL 853 On RFL 1321 and 1322 the extension is in steel!
Type of clogging indicator	VM (differential pressure measurement up to 210 bar operating pressure)
Pressure setting of the clogging indicator	2 bar (others on request)
Bypass cracking pressure	3 bar (others on request)

1.4 SEALS

NBR (= Perbunan)

1.5 INSTALLATION

As inline filter

1.6 SPECIAL MODELS AND ACCESSORIES

- Inlet and outlet positioned one above the other
- Counter flanges as welding or blank flanges

1.7 SPARE PARTS

See Original Spare Parts List

1.8 CERTIFICATES AND APPROVALS

These filters can be supplied with manufacturer's test certificates O and M to DIN 55350, Part 18. Test certificates 3.1 to DIN EN 10204 and approval certificates (Type Approval) for different approval authorities. Areas of application, amongst others: lubrication.

Filter to API 614 (ANSI flange) on request!

1.9 COMPATIBILITY WITH HYDRAULIC FLUIDS ISO 2943

- Hydraulic oils H to HLPD DIN 51524
- Lubrication oils DIN 51517, API, ACEA, DIN 51515, ISO 6743
- Compressor oils DIN 51506
- Biodegradable operating fluids VDMA 24568 HETG, HEES, HEPG
- Fire-resistant fluids HFA, HFB, HFC and HFD
- Operating fluids with high water content (>50% water content) on request

1.10 IMPORTANT INFORMATION

- Filter housings must be earthed.
- When using electrical clogging indicators, the electrical power supply to the system must be switched off before removing the clogging indicator connector.
- Filters must be flexibly mounted and not fixed rigidly to the floor or used as a pipe support.
- When used with W/HC and P/HC elements, please follow the sizing recommendation under point 3.3!

Symbol for hydraulic systems

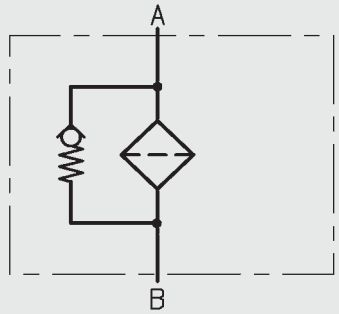

www.comoso.com

2. MODEL CODE (also order example)

RFL BN/HC 851 D N 10 D 1 . X /-L24

2.1 COMPLETE FILTER

Filter type
RFL

Filter material of element

BN/HC	Betamicron® (BN4HC)	P/HC	Paper	AM	Aquamicron®
V	Stainless steel fibre	W/HC	Wire mesh	BN/AM	Betamicron®/Aquamicron®

Size of filter or element
RFL: 661, 662, 851, 853, 951, 952, 1301, 1302, 1321, 1322

Operating pressure
D = 25 bar
E = 40 bar (RFL 662-1322 according to AD)

Type and size of connection

Type	Connection	Filter size 661 662	851 853	951 952	1301 1302	1321 1322
N	SAE DN 80 (3")	●	●			
P	SAE DN 100 (4")			●	●	●
Q	DIN DN 80	●	●			
R	DIN DN 100			●	●	●

Other nominal bores, and ANSI flange version on request

Filtration rating in µm
BN/HC, V: 3, 5, 10, 20 P/HC: 10, 20 AM: 40
W/HC: 25, 50, 100, 200 BN/AM: 3, 10

Type of clogging indicator
Y plastic blanking plug in indicator port
A steel blanking plug in indicator port
B visual
C electrical
D visual and electrical
for other clogging indicators, see brochure no. 7.050../..

Type code
1

Modification number
X the latest version is always supplied

Supplementary details
B. special cracking pressure of bypass (e.g. B1 = 1 bar)
GA counter flange as welding flange
GB counter flange as blank flange
KB without bypass valve
L... light with appropriate voltage (24V, 48V, 110V, 220V)
LED 2 light emitting diodes up to 24 Volt
only for clogging indicators type "D"
OR O-ring groove on the DIN flange (inlet and outlet) to Rexroth standard AB 22-04
V FPM seals
33 inlet and outlet positioned one above the other
SAK contamination retainer

2.2 REPLACEMENT ELEMENT

0850 R 010 BN4HC /-V

Size
0660, 0850, 0950, 1300, 2600

Type
R

Filtration rating in µm
BN4HC, V: 003, 005, 010, 020 P/HC: 010, 020 AM: 040
W/HC: 025, 050, 100, 200 BN4AM: 003, 010

Filter material
BN4HC, V, W/HC, P/HC, BN4AM, AM

Supplementary details
V (for descriptions, see point 2.1)

2.3 REPLACEMENT CLOGGING INDICATOR

VM 2 D . X /-L24

Type
VM differential pressure measurement up to 210 bar operating pressure

Pressure setting
2 standard 2 bar, others on request

Type of clogging indicator (see Point 2.1)

Modification number
X the latest version is always supplied

Supplementary details
L..., LED, V (for descriptions, see point 2.1)

www.comoso.com

3. FILTER CALCULATION / SIZING

The total pressure drop of a filter at a certain flow rate Q is the sum of the housing Δp and the element Δp and is calculated as follows:

$$\Delta p_{total} = \Delta p_{housing} + \Delta p_{element}$$

$$\Delta p_{housing} = \text{(see Point 3.1)}$$

$$\Delta p_{element} = Q \cdot \frac{SK^*}{1000} \cdot \frac{viscosity}{30}$$

(*see point 3.2)

For ease of calculation, our Filter Sizing Program is available on request free of charge.

NEW: Sizing online at www.hydac.com

3.1 Δp-Q HOUSING CURVES BASED ON ISO 3968

The housing curves apply to mineral oil with a density of 0.86 kg/dm³ and a kinematic viscosity of 30 mm²/s.
In this case, the differential pressure changes proportionally to the density.

RFL 661, 662, 851, 853

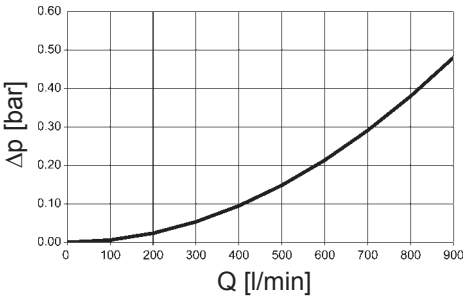

RFL 951, 952, 1301, 1302, 1321, 1322

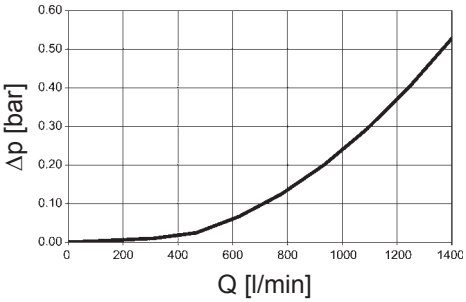

3.2 GRADIENT COEFFICIENTS (SK) FOR FILTER ELEMENTS

The gradient coefficients in mbar/(l/min) apply to mineral oils with a kinematic viscosity of 30 mm²/s. The pressure drop changes proportionally to the change in viscosity.

RFL	V				W/HC
	3 µm	5 µm	10 µm	20 µm	–
660	1.0	0.8	0.6	0.4	0.081
850	0.8	0.6	0.4	0.3	0.063
950	0.7	0.6	0.4	0.2	0.054
1300	0.5	0.4	0.3	0.2	0.045
2600	0.3	0.2	0.1	0.1	0.022

BN4HC: RFL 660

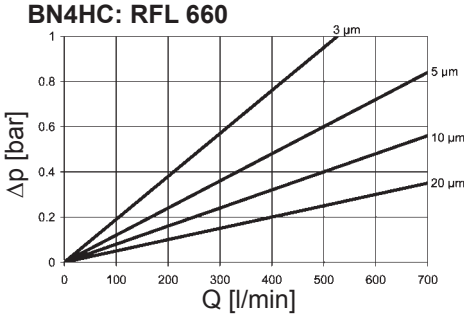

BN4HC: RFL 850

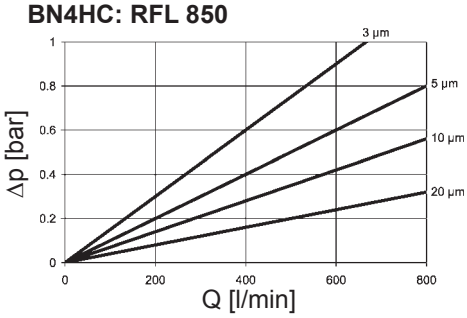

BN4HC: RFL 950

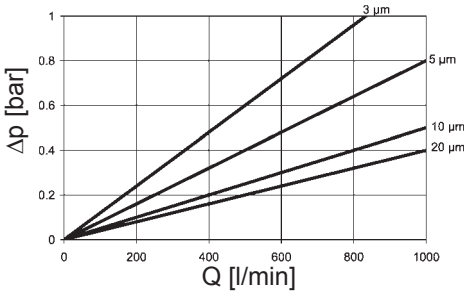

BN4HC: RFL 1300

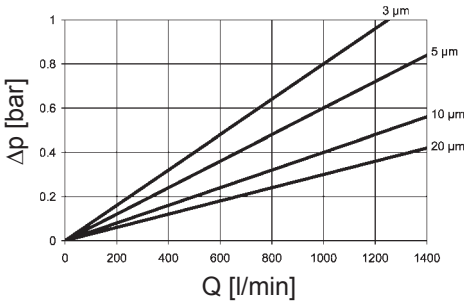

BN4HC: RFL 2600

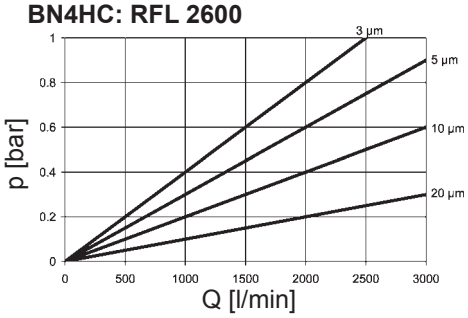

3.3 SIZING RECOMMENDATION

Filter type	Connection	Q_{max} when using W/HC and P/HC elements
RFL 661/662	DIN DN 80 SAE DN 80	480 l/min 480 l/min
RFL 851/852	DIN DN 80 SAE DN 80	480 l/min 480 l/min
RFL 951/952	DIN DN 100 SAE DN 100	900 l/min 900 l/min
RFL 1301/1302/1321/1322	DIN DN 100 SAE DN 100	900 l/min 900 l/min

www.comoso.com

4. DIMENSIONS

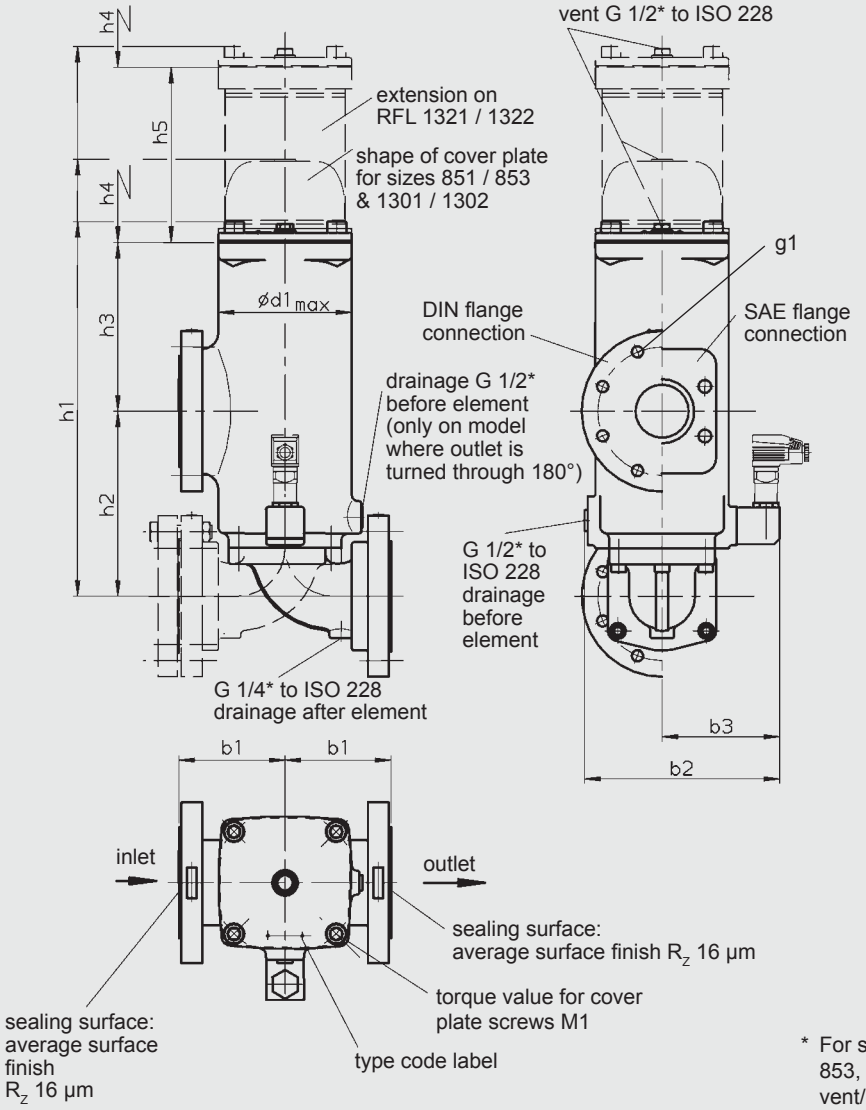

* For sizes RFLD 662, 853, 952, 1302 and 1322: vent/drain G 3/4

RFL	Flange connection	b1	b2	b3	d1	h1	h2	h3	h4	h5	M1 (Nm)	g1	Weight including element [kg]	Volume of pressure chamber [l]
661	SAE DN 80 DIN DN 80	133	192 184	239	172	465	230	210	350	-	150	M16 M16	36	8.2
662	SAE DN 80 DIN DN 80	133	192 184	239	172	465	230	210	350	-	150	M16 M16	42	8.2
851	SAE DN 80 DIN DN 80	133	192 184	239	172	552	230	210	420	-	150	M16 M16	38.5	9.5
853	SAE DN 80 DIN DN 80	133	192 184	239	172	552	230	210	420	-	150	M16 M16	45	9.5
951	SAE DN 100 DIN DN 100	143	223 215	267	220	523	250	238	380	-	250	M16 M20	54	13
952	SAE DN 100 DIN DN 100	143	223 215	267	220	523	250	238	380	-	250	M16 M20	67.5	13
1301	SAE DN 100 DIN DN 100	143	223 215	267	220	630	250	238	500	-	250	M16 M20	55.5	16
1302	SAE DN 100 DIN DN 100	143	223 215	267	220	630	250	238	500	-	250	M16 M20	75.5	16
1321	SAE DN 100 DIN DN 100	143	223 215	267	220	1084	250	238	940	561	250	M16 M20	82	31
1322	SAE DN 100 DIN DN 100	143	223 215	267	220	1084	250	238	940	561	250	M16 M20	96	31

NOTE

The information in this brochure relates to the operating conditions and applications described.
For applications and operating conditions not described, please contact the relevant technical department.
Subject to technical modifications.

HYDAC FILTERTECHNIK GMBH
Industriegebiet
D-66280 Sulzbach/Saar, Germany
Tel.: 0 68 97 / 509-01
Fax: 0 68 97 / 509-300
Internet: www.hydac.com
E-mail: filter@hydac.com

www.comoso.com

Low Pressure Filter LPF
up to 280 l/min, up to 50 bar

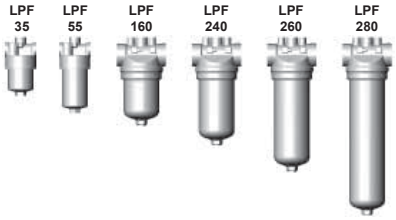

1. TECHNICAL SPECIFICATIONS

1.1 FILTER HOUSING

Construction
The filter housings are designed in accordance with international regulations. They consist of a filter head and a screw-in filter bowl.

Standard equipment:

- without bypass valve
- connection for a clogging indicator

1.2 FILTER ELEMENTS

HYDAC filter elements are validated and their quality is constantly monitored according to the following standards:

- ISO 2941, ISO 2942, ISO 2943, ISO 3724, ISO 3968, ISO 11170, ISO 16889

Contamination retention capacities in g

	Betamicron (BN4HC)			
LPF	3 µm	5 µm	10 µm	20 µm
35	7.2	8.1	8.6	8.8
55	14.0	15.8	16.6	17.2
160	19.8	22.2	23.5	24.3
240	32.3	36.3	38.4	39.6
260	46.4	52.0	55.0	56.9
280	70.6	79.3	83.9	86.6

	Betamicron® (BH4HC)			
LPF	3 µm	5 µm	10 µm	20 µm
35	5.3	5.2	5.8	6.6
55	10.5	10.3	11.5	13.0
160	12.9	12.6	13.9	15.9
240	21.6	21.1	23.2	26.5
260	32.1	31.5	34.6	39.4
280	48.1	47.1	51.8	59.1

Filter elements are available with the following pressure stability values:
Betamicron® (BN4HC): 25 bar
Betamicron® (BH4HC): 210 bar
Stainl. steel wire mesh (W/HC)*:30 bar

*only for LPF 160, 240, 260, 280

IMPORTANT:
Only filter elements in ...HC material can be used in LPF filters!

1.3 FILTER SPECIFICATIONS

Nominal pressure	LPF 35, 55: 40 bar LPF 160, 240, 260, 280: 50 bar
Fatigue strength	at nominal pressure 10^6 load cycles from 0 to nominal pressure LPF 35 and 55: 10^7 load cycles at 40 bar
Temperature range	-30 °C to +100 °C
Material of filter head	Aluminium
Material of filter bowl	Aluminium
Type of indicator	VM (Diff. pressure indicator up to 210 bar operating pressure) VL (Diff. pressure indicator up to 40 bar operating pressure - only BF indicator)
Pressure setting of clogging indicator	5 bar (others on request)
Cracking press. bypass valve (optional)	6 bar (LPF 160 - 280) 7 bar (LPF 35 - 55) others on request

1.4 SEALS
Perbunan (= NBR)

1.5 MOUNTING
As inline filter

1.6 SPECIAL MODELS AND ACCESSORIES

- Seals in FPM, EPDM
- With bypass valve (1, 3, 6 or 7 bar)
- Without port for clogging indicator (LPF 160, 240, 260, 280)

1.7 SPARE PARTS
See Original Spare Parts List

1.8 CERTIFICATES AND APPROVALS
On request

1.9 COMPATIBILITY WITH HYDRAULIC FLUIDS ISO 2943

- Hydraulic oils H to HLPD DIN 51524
- Lubrication oils DIN 51517, API, ACEA, DIN 51515, ISO 6743
- Compressor oils DIN 51506
- Biodegradable operating fluids VDMA 24568 HETG, HEES, HEPG
- Fire-resistant fluids HFC and HFD
- Operating fluids with high water content (>50% water content) on request

Symbol for hydraulic systems

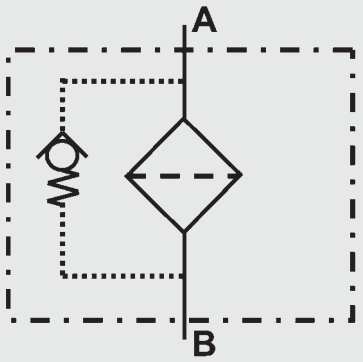

2. MODEL CODE (also order example)

LPF BN/HC 160 G E 10 D 1 . X /-L24

2.1 COMPLETE FILTER

Filter type
LPF

Filter material
BN/HC Betamicron® (BN4HC)
BH/HC Betamicron® (BH4HC)
W/HC Stainless steel wire mesh (only LPF 160, 240, 260, 280)

Size of filter or element
LPF: 35, 55, 160, 240, 260, 280

Operating pressure
E = 40 bar (LPF 35, 55)
G = 50 bar (LPF 160, 240, 260, 280)

Type and size of connection

Type	Port	Filter size					
		35	55	160	260	240	280
A	M18 x 1.5	●	●				
B	G ½	●	●				
E	G 1¼			●	●	●	●

Filtration rating in µm
BN/HC, BH/HC: 3, 5, 10, 20
W/HC: 25, 50, 100, 200 (only LPF 160, 240, 260, 280)

Type of clogging indicator
W without port (no clogging indicator)
Y plastic blanking plug in indicator port
A steel blanking plug in indicator port
B visual
C electrical
D visual and electrical
] for other clogging indicators, see brochure no. 7.050../..
BF visual mobile indicator (only LPF 160, 240, 260, 280)
Return line indicator possible on request!

Type code
1

Modification number
X the latest version is always supplied

Supplementary details
B. cracking pressure of bypass valve (e.g. B6 = 6 bar); no details = without bypass valve
BFL BF clogging indicator on left in direction of flow
BFR BF clogging indicator on right in direction of flow
L... light with appropriate voltage (24, 48, 110, 220 Volt)
LED 2 light-emitting diodes up to 24 Volt
] only for clogging indicators type "D"
SO184 pressure release/oil drain screw
V FPM seals
W suitable for HFA and HFC emulsions

2.2 REPLACEMENT ELEMENT

0160 D 010 BN4HC /-V

Size
0035, 0055, 0160, 0240, 0260, 0280

Type
D

Filtration rating in µm
BN4HC, BH4HC: 003, 005, 010, 020
W/HC: 025, 050, 100, 200 (only LPF 160, 240, 260, 280)

Filter material
BN4HC, BH4HC, W/HC

Supplementary details
V, W (for descriptions, see point 2.1)

2.3 REPLACEMENT CLOGGING INDICATOR

VM 5 D . X /-L24

Type of indicator
VM Diff. pressure indicator up to 210 bar operating pressure
VL Diff. pressure indicator up to 50 bar operating pressure (only in conjunction with the "BF" indicator)

Pressure setting
5 standard 5 bar, others on request (standard 2 bar on "BF" indicator)

Type of clogging indicator (see Point 2.1)

Modification number
X the latest version is always supplied

Supplementary details
L..., LED, V, W (for descriptions, see point 2.1)

www.comoso.com

3. FILTER CALCULATION / SIZING

The total pressure drop of a filter at a certain flow rate Q is the sum of the housing Δp and the element Δp and is calculated as follows:

$$\Delta p_{total} = \Delta p_{housing} + \Delta p_{element}$$

$$\Delta p_{housing} = \text{(see Point 3.1)}$$

$$\Delta p_{element} = Q \cdot \frac{SK^*}{1000} \cdot \frac{viscosity}{30}$$

(*see Point 3.2)

For ease of calculation, our Filter Sizing Program is available on request free of charge.

NEW: Sizing online at www.hydac.com

3.1 Δp-Q HOUSING CURVES BASED ON ISO 3968

The housing curves apply to mineral oil with a density of 0.86 kg/dm³ and a kinematic viscosity of 30 mm²/s.
In this case, the differential pressure changes proportionally to the density.

LPF 35, 55

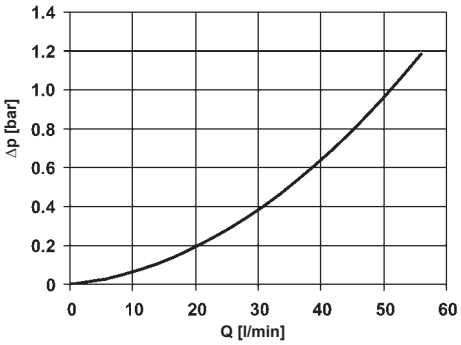

LPF 160, 240, 260, 280

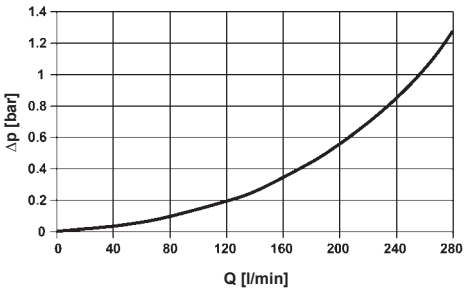

3.2 GRADIENT COEFFICIENTS (SK) FOR FILTER ELEMENTS

The gradient coefficients in mbar/(l/min) apply to mineral oils with a kinematic viscosity of 30 mm²/s. The pressure drop changes proportionally to the change in viscosity.

	BH4HC				W/HC
	3 µm	5 µm	10 µm	20 µm	–
35	47.8	28.1	16.8	10.5	–
55	24.2	14.2	8.5	5.3	–
160	16.8	10.4	5.9	4.4	0.316
240	10.6	6.8	3.9	2.9	0.211
260	8.1	4.8	3.3	1.9	0.131
280	5.7	3.4	1.8	1.6	0.089

BN4HC: LPF 35

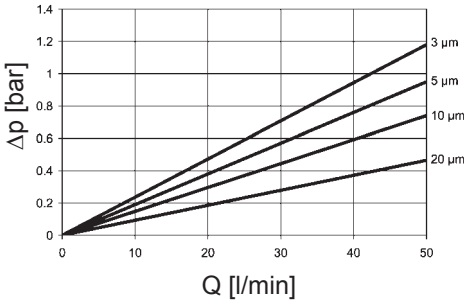

BN4HC: LPF 55

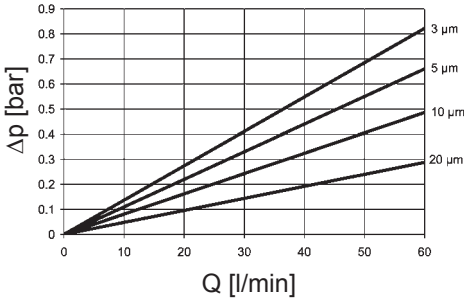

BN4HC: LPF 160

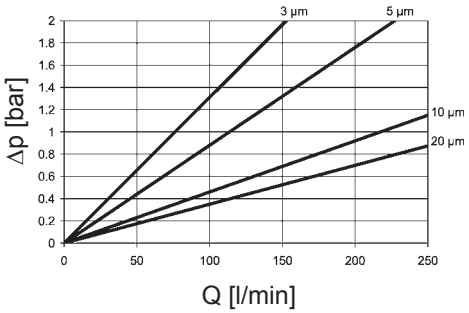

BN4HC: LPF 240

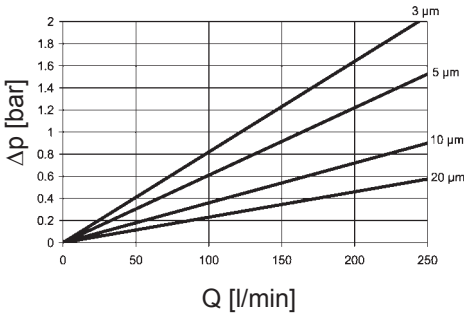

BN4HC: LPF 260

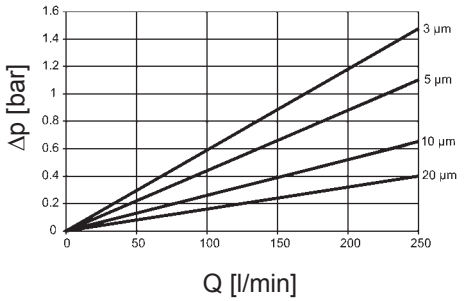

BN4HC: LPF 280

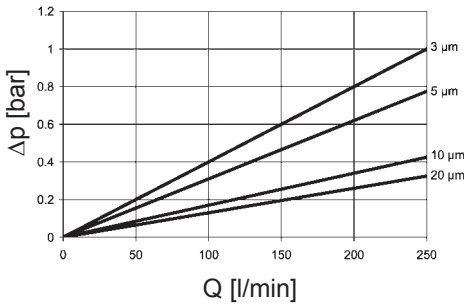

www.comoso.com

4. DIMENSIONS

LPF 35, 55

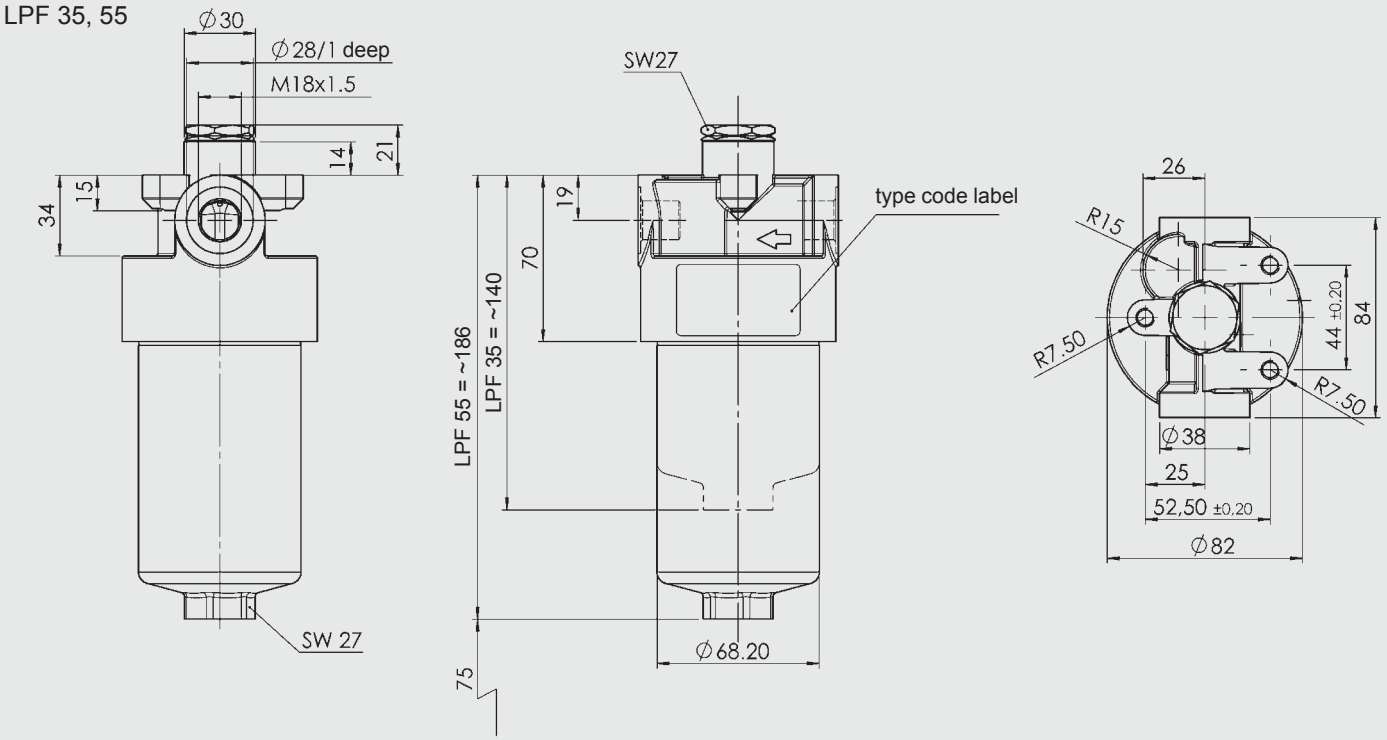

LPF 160, 240, 260, 280

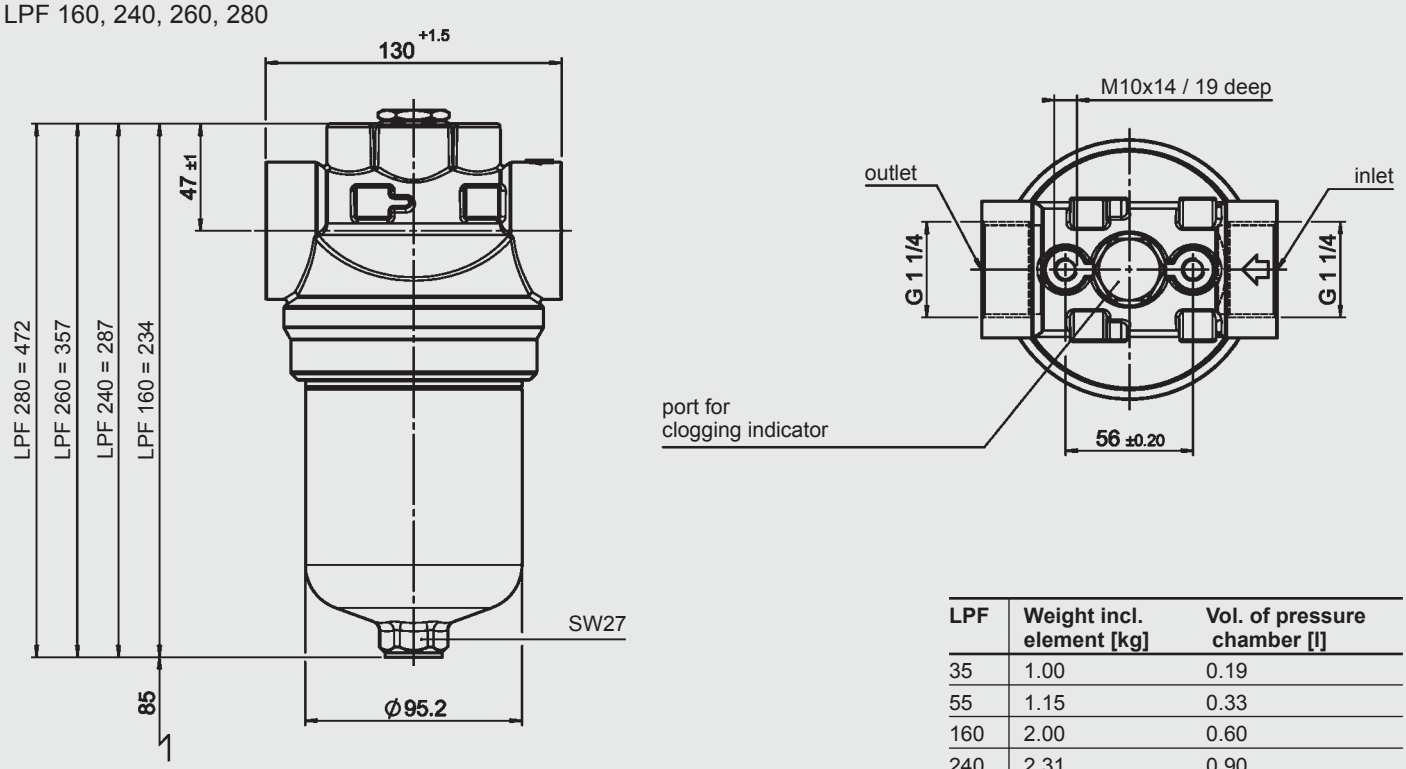

LPF	Weight incl. element [kg]	Vol. of pressure chamber [l]
35	1.00	0.19
55	1.15	0.33
160	2.00	0.60
240	2.31	0.90
260	2.76	1.30
280	3.28	1.70

NOTE

The information in this brochure relates to the operating conditions and applications described.
For applications or operating conditions not described, please contact the relevant technical department.
Subject to technical modifications.

HYDAC FILTERTECHNIK GMBH
Industriegebiet
D-66280 Sulzbach/Saar
Tel.: 0 68 97 / 509-01
Fax: 0 68 97 / 509-300
Internet: www.hydac.com
E-Mail: filter@hydac.com

www.comoso.com

Inline Filter LF
Inline Filter LFF
for Reversible Oil Flow

up to 660 l/min, up to 100 bar

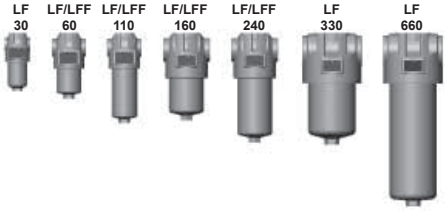

1. TECHNICAL SPECIFICATIONS

1.1 FILTER HOUSING

Construction

The filter housings are designed in accordance with international regulations. They consist of a filter head and a screw-in filter bowl. LFF filters are suitable for flow in both directions.

Standard equipment:

- connection for a clogging indicator in filter head
- mounting holes in the filter head
- drain screw with pressure relief (LF 330 and above)

1.2 FILTER ELEMENTS

HYDAC filter elements are validated and their quality is constantly monitored according to the following standards:

- ISO 2941
- ISO 2942
- ISO 2943
- ISO 3724
- ISO 3968
- ISO 11170
- ISO 16889

Contamination retention capacities in g

	Betamicron® (BN4HC)			
LF/LFF	3 µm	5 µm	10 µm	20 µm
30	4.6	5.1	5.4	5.6
60	6.5	7.3	7.8	8.0
110	13.8	15.5	16.4	16.9
160	19.8	22.2	23.5	24.3
240	32.3	36.3	38.4	39.6
330	47.2	53.1	56.1	57.9
660	102.2	114.9	121.5	125.4

	Betamicron® (BH4HC)			
LF/LFF	3 µm	5 µm	10 µm	20 µm
30	3.0	2.9	3.2	3.7
60	4.6	4.5	5.0	5.7
110	10.1	9.9	10.9	12.4
160	12.9	12.6	13.9	15.9
240	21.6	21.1	23.2	26.5
330	34.6	33.9	37.2	42.5
660	76.8	75.2	82.6	94.3

Filter elements are available with the following pressure stability values:

Betamicron® (BN4HC):	20 bar
Betamicron® (BH4HC):	210 bar
Wire mesh (W):	20 bar
Stainless steel fibre (V):	210 bar

1.3 FILTER SPECIFICATIONS

Nominal pressure	100 bar
Fatigue strength	At nominal pressure 10^6 cycles from 0 to nominal pressure (For other pressures, see graph at 1.8)
Temperature range	-30 °C to +100 °C (LF/LFF 660: -30 °C to -10 °C: p_{max} = 75 bar)
Material of filter head	Aluminium
Material of filter bowl	Aluminium
Type of clogging indicator	VM (differential pressure measurement up to 210 bar operating pressure)
Pressure setting of the clogging indicator	5 bar (others on request)
Bypass cracking pressure (optional)	6 bar (others on request)

1.4 SEALS

NBR (= Perbunan)

1.5 INSTALLATION

As inline filter with or without reversible oil flow

1.6 SPECIAL MODELS AND ACCESSORIES

- Bypass valve built into the head, separate from the main flow
- Oil drain screw up to LF/LFF 240
- Seals in FPM, EPDM
- Test and approval certificates

1.7 SPARE PARTS

See Original Spare Parts List

1.8 FATIGUE STRENGTH

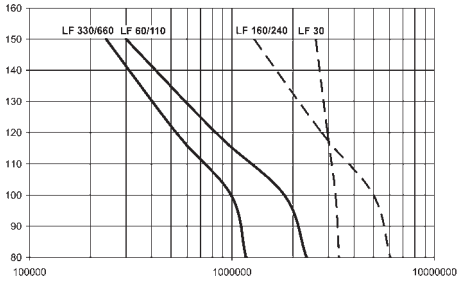

1.9 CERTIFICATES AND APPROVALS

On request

1.10 COMPATIBILITY WITH HYDRAULIC FLUIDS ISO 2943

- Hydraulic oils H to HLPD DIN 51524
- Lubrication oils DIN 51517, API, ACEA, DIN 51515, ISO 6743
- Compressor oils DIN 51506
- Biodegradable operating fluids VDMA 24568 HETG, HEES, HEPG
- Fire-resistant fluids HFA, HFB, HFC and HFD
- Operating fluids with high water content (>50% water content) on request

1.11 IMPORTANT INFORMATION

- Filter housings must be earthed.
- When using electrical clogging indicators, the electrical power supply to the system must be switched off before removing the clogging indicator connector.

Symbol for hydraulic systems

LF

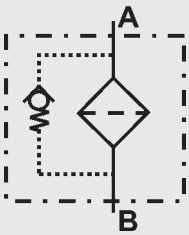

LFF

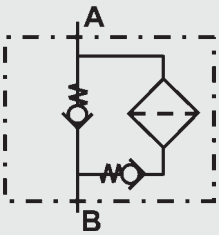

www.comoso.com

2. MODEL CODE (also order example)

LF BN/HC 60 I C 10 D 1 . X /-L24

2.1 COMPLETE FILTER

Filter type
LF or LFF

Filter material of element
BN/HC Betamicron® (BN4HC)
BH/HC Betamicron® (BH4HC)
W Stainless steel wire mesh
V Stainless steel fibre

Size of filter or element
LF: 30, 60, 110, 160, 240, 330, 660
LFF: 60, 110, 160, 240

Operating pressure
I = 100 bar

Type and size of connection

Type	Port	Filter size						
		30	60	110	160	240	330	660
B	G ½	●						
C	G ¾		●	●				
E	G1 ¼				●	●		
F	G1 ½						●	●

Filtration rating in µm
BN/HC, BH/HC, V: 3, 5, 10, 20
W: 25, 50, 100, 200

Type of clogging indicator
Y plastic blanking plug in indicator port
A steel blanking plug in indicator port
B visual
C electrical
D visual and electrical
] for other clogging indicators, see brochure no. 7.050../..

Type code
1

Modification number
X the latest version is always supplied

Supplementary details
B. bypass cracking pressure (e.g. B6 = 6 bar); without details = without bypass valve
L... light with appropriate voltage (24V, 48V, 110V, 220V)
LED 2 light emitting diodes up to 24 Volt
] only for clogging indicators type "D"
SO184 pressure release/oil drain screw (standard for LF 330 and above)
V FPM seals
W suitable for HFA, HFC oil-water emulsions (only necessary when using a clogging indicator or V or W elements)

2.2 REPLACEMENT ELEMENT

0060 D 010 BN4HC /-V

Size
0030, 0060, 0110, 0160, 0240, 0330, 0660

Type
D

Filtration rating in µm
BN4HC, BH4HC, V: 003, 005, 010, 020
W: 025, 050, 100, 200

Filter material
BN4HC, BH4HC, V, W

Supplementary details
V, W (for descriptions, see point 2.1)

2.3 REPLACEMENT CLOGGING INDICATOR

VM 5 D . X /-L24

Type of indicator
VM differential pressure indicator up to 210 bar operational pressure

Pressure setting
5 standard for LF filters 5 bar
8 standard for LFF filters 8 bar
] others on request

Type of clogging indicator
D (see Point 2.1)

Modification number
X the latest version is always supplied

Supplementary details
L..., LED, V, W (for descriptions, see point 2.1)

www.comoso.com

3. FILTER CALCULATION / SIZING

The total pressure drop of a filter at a certain flow rate Q is the sum of the housing Δp and the element Δp and is calculated as follows:

$$\Delta p_{total} = \Delta p_{housing} + \Delta p_{element}$$

$$\Delta p_{housing} = \text{(see Point 3.1)}$$

$$\Delta p_{element} = Q \cdot \frac{SK^*}{1000} \cdot \frac{viscosity}{30}$$

(*see Point 3.2)

For ease of calculation, our Filter Sizing Program is available on request free of charge.

NEW: Sizing online at www.hydac.com

3.1 Δp-Q HOUSING CURVES BASED ON ISO 3968

The housing curves apply to mineral oil with a density of 0.86 kg/dm³ and a kinematic viscosity of 30 mm²/s.
In this case, the differential pressure changes proportionally to the density.

LF 30

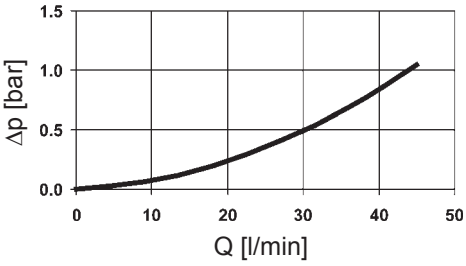

LF 60-110

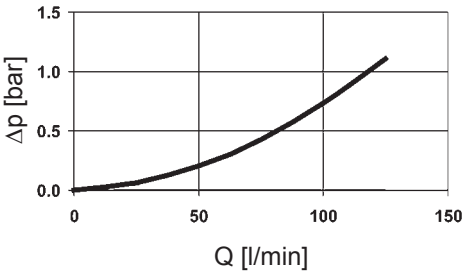

LF 160-240

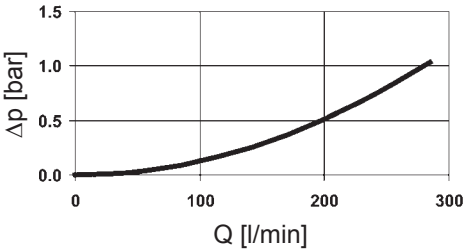

LF 330-660

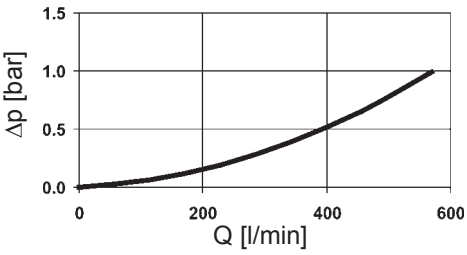

LFF Δp-Q housing curves on request!

3.2 GRADIENT COEFFICIENTS (SK) FOR FILTER ELEMENTS

The gradient coefficients in mbar/(l/min) apply to mineral oils with a kinematic viscosity of 30 mm²/s. The pressure drop changes proportionally to the change in viscosity.

LF/	V				W	BH4HC			
LFF	3 µm	5 µm	10 µm	20 µm	–	3 µm	5 µm	10 µm	20 µm
30	18.0	13.0	7.4	3.7	3.367	91.2	50.7	36.3	19.0
60	16.0	11.0	6.5	3.3	1.683	58.6	32.6	18.1	12.2
110	8.3	6.0	4.2	2.1	0.918	25.4	14.9	8.9	5.6
160	4.5	3.2	2.3	1.4	0.631	16.8	10.4	5.9	4.4
240	3.2	2.4	1.9	1.1	0.421	10.6	6.8	3.9	2.9
330	2.1	1.5	1.3	0.8	0.307	7.7	4.5	2.8	2.0
660	1.1	0.9	0.6	0.3	0.153	3.3	1.9	1.0	0.9

BN4HC: 30

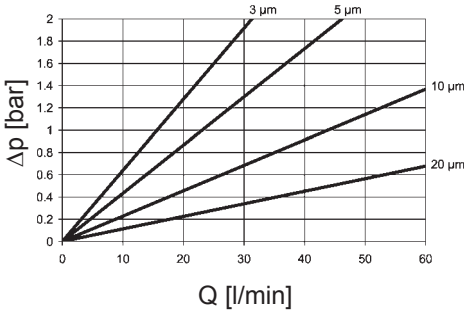

BN4HC: 60

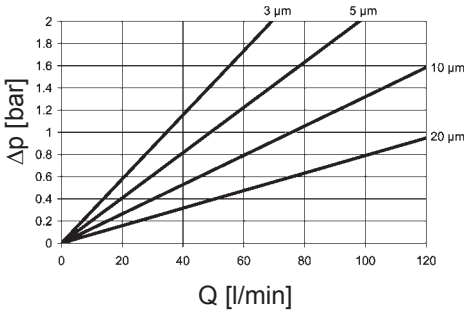

BN4HC: 110

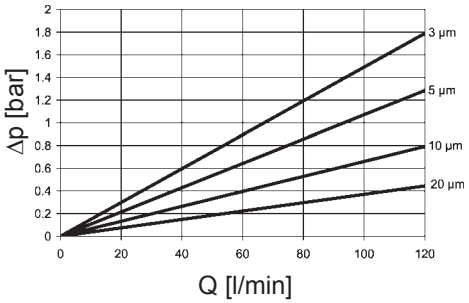

BN4HC: 160

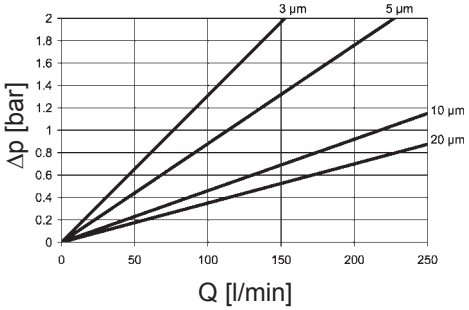

BN4HC: 240

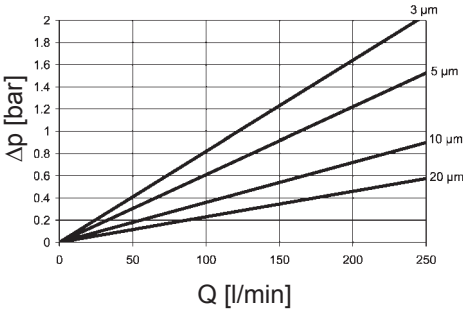

BN4HC: 330

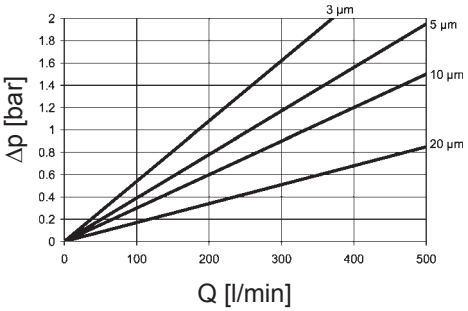

BN4HC: 660

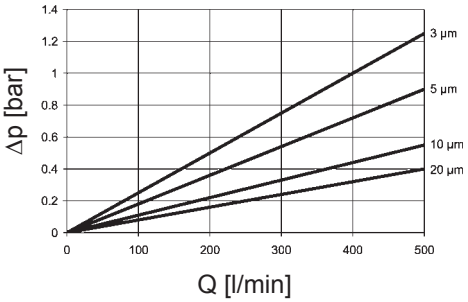

www.comoso.com

4. DIMENSIONS

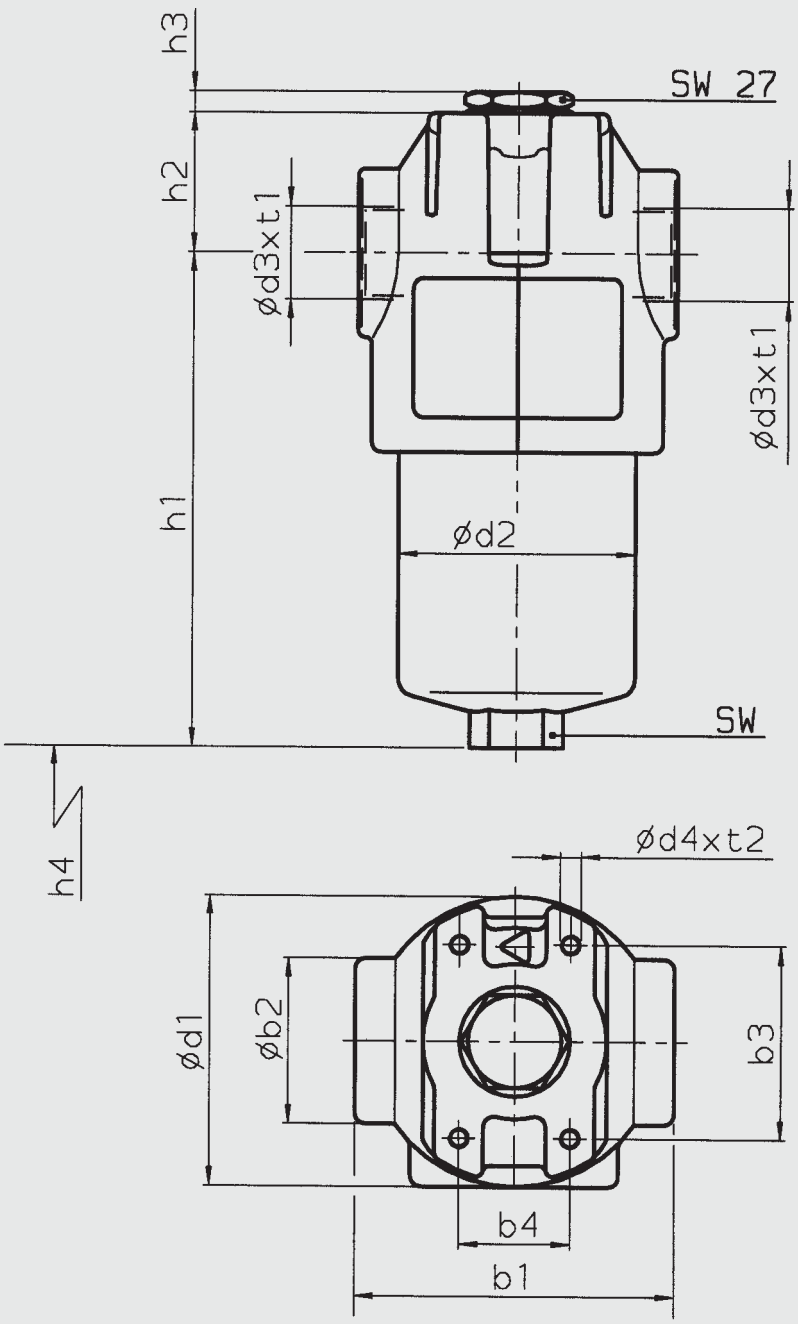

LF / LFF	b1	b2	b3	b4	d1	d2	d3	d4	h1	h2	h3	h4	SW	t1	t2	Weight including element [kg]	Volume of pressure chamber [l]
30	69	36	45	30	67	52	G½	M5	125.5	31	7	75	24	15	8	0.8	0.13
60	90	48	56	32	84	68	G¾	M6	137.5	39	6	75	27	17	9	1.5	0.24
110	90	48	56	32	84	68	G¾	M6	207.0	39	6	75	27	17	9	1.8	0.42
160	125	65	85	35	116	95	G1¼	M10	190.5	46	6	95	32	21	14	3.7	0.60
240	125	65	85	35	116	95	G1¼	M10	250.5	46	6	95	32	21	14	4.3	0.80
330	159	85	115	60	160	130	G1½	M12	252.5	50	6	105	36	23	17	8.0	1.50
660	159	85	115	60	160	127	G1½	M12	417.5	50	6	105	36	23	17	11.0	3.00

NOTE

The information in this brochure relates to the operating conditions and applications described.
For applications or operating conditions not described, please contact the relevant technical department.
Subject to technical modifications.

HYDAC FILTERTECHNIK GMBH
Industriegebiet
D-66280 Sulzbach/Saar, Germany
Tel.: 0 68 97 / 509-01
Fax: 0 68 97 / 509-300
Internet: www.hydac.com
E-mail: filter@hydac.com

www.comoso.com

Inline Filter DFN/DFNF/LFN/LFNF to DIN 24550

up to 400 l/min, up to 400 bar

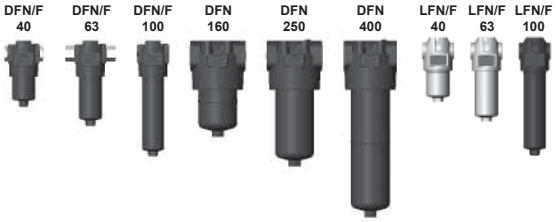

1. TECHNICAL SPECIFICATIONS

1.1 FILTER HOUSING

Construction

The filter housings are designed in accordance with international regulations. They consist of a filter head and a screw-in filter bowl.

DFNF and LFNF filters are suitable for flow in both directions.

Standard equipment:

- without bypass valve
- connection for a clogging indicator

1.2 FILTER ELEMENTS

HYDAC filter elements are validated and their quality is constantly monitored according to the following standards:

- ISO 2941
- ISO 2942
- ISO 2943
- ISO 3724
- ISO 3968
- ISO 11170
- ISO 16889

Contamination retention capacities in g

	Betamicron® (BN4HC)			
LFN, LFNF DFN, DFNF	3 µm	6 µm	10 µm	25 µm
40	5.2	5.6	6.3	7.0
63	9.2	9.9	11.1	12.8
100	15.4	16.5	18.6	20.6
160	27.5	29.3	33.1	36.7
250	46.0	49.0	55.2	61.3
400	76.2	81.3	91.4	101.5

	Betamicron® (BH4HC)			
LFN, LFNF DFN, DFNF	3 µm	6 µm	10 µm	25 µm
40	4.1	4.4	5.2	6.2
63	7.3	7.9	9.2	11.2
100	12.2	13.2	15.5	18.9
160	21.8	23.9	27.8	33.8
250	38.1	41.7	48.6	59.0
400	63.6	69.5	81.0	98.3

Filter elements are available with the following pressure stability values:

Betamicron® (BN4HC):	20 bar
Betamicron® (BH4HC):	160 bar
Wire mesh (W/HC):	20 bar

1.3 FILTER SPECIFICATIONS

Nominal pressure	100 bar 210 bar 400 bar	: all LFN and LFNF : DFN 160, 400 : DFN 40, 63, 100, 250 DFNF 40, 63, 100
Fatigue strength	At nominal pressure 10^6 cycles from 0 to nominal pressure	
Temperature range	-30 °C to +100 °C (-30 °C to -10 °C = 200 bar - only DFN/F)	
Material of filter head (and cover plate)	EN-GJS-400-15 Aluminium	: DFN/F : LFN/F
Material of filter bowl (tube)	Steel Aluminium Steel	: DFN/F : LFN/F 40, 63 : LFN/F 100
Type of indicator	VM (Diff. pressure ind. up to 210 bar oper. pressure - not for type LZ) VD (Diff. pressure ind. up to 420 bar oper. pressure)	
Pressure setting of the clogging indicator	5 bar (others on request)	
Bypass cracking pressure (optional)	7 bar (others on request)	

1.4 SEALS

NBR (= Perbunan)

1.5 INSTALLATION

As inline filter

1.6 SPECIAL MODELS AND ACCESSORIES

- with bypass valve
- FPM seals

1.7 SPARE PARTS

See Original Spare Parts List

1.8 CERTIFICATES AND APPROVALS

On request

1.9 COMPATIBILITY WITH HYDRAULIC FLUIDS ISO 2943

- Hydraulic oils H to HLPD DIN 51524
- Lubrication oils DIN 51517, API, ACEA, DIN 51515, ISO 6743
- Compressor oils DIN 51506
- Biodegradable operating fluids VDMA 24568 HETG, HEES, HEPG
- Fire-resistant fluids HFA, HFB, HFC and HFD
- Operating fluids with high water content (>50% water content) on request

1.10 IMPORTANT INFORMATION

- Filter housings must be earthed.
- When using electrical clogging indicators, the electrical power supply to the system must be switched off before removing the clogging indicator connector.

Symbol for hydraulic systems DFN / LFN

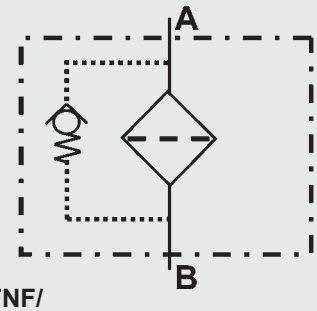

DFNF/ LFNF

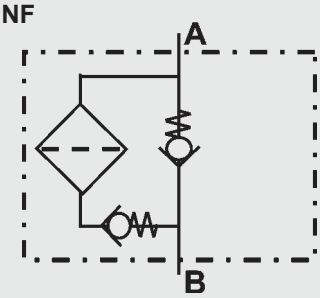

E 7.557.3/03.12

2. MODEL CODE (also order example)

DFN BN/HC 250 S F 10 D 1 . X /-L24

2.1 COMPLETE FILTER

Filter type
DFN, LFN, LFNF, DFNF

Filter material of element
BN/HC Betamicron® (BN4HC) BH/HC Betamicron® (BH4HC)
W/HC Wire mesh

Size of filter or element
DFN: 40, 63, 100, 160*, 250, 400 (*on request)
DFNF: 40, 63, 100
LFN/F: 40, 63, 100

Operating pressure
I = 100 bar (LFN and LFNF)
L = 210 bar (DFN 160, 400)
S = 400 bar (DFN 40, 63, 100, 250; DFNF 40, 63, 100)

Type and size of connection

Type	Connection	Filter size 40	63	100	160	250	400
B	G ½	●	x	x			
C	G ¾	x	●	x			
D	G 1	x	x	●			
E	G 1¼				●	x	x
F	G 1½				x	●	x
K	DN 40*				x	x	●

*Flange SAE, 6000 PSI

Filtration rating in µm
BN/HC, BH/HC: 3, 6, 10, 25 W/HC: 25, 50, 100, 200

Type of clogging indicator
Y plastic blanking plug in indicator port
A steel blanking plug in indicator port
B visual
C electrical
D visual and electrical
LZ visual-mechanical / electrical
for other clogging indicators, see brochure no. 7.050../..

Type code
1 DFN / DFNF
2 LFN / LFNF

Modification number
X the latest version is always supplied

Supplementary details
B. bypass cracking pressure (e.g. B7 = 7 bar); without details = without bypass valve
L... light with appropriate voltage (24V, 48V, 110V, 220V) } only for clogging
LED 2 light emitting diodes up to 24 Volt } indicators type D
AV LZ indicator with plug to AUDI and VW specification
BO LZ indicator with plug and pin connection to BMW and Opel specification (M12x1)
CN LZ indicator with plug to DIN 43651 with 3 LEDs (CNOMO specification)
DB LZ indicator with plug to DIN 43651 with 3 LEDs (Daimler-Benz specification)
D4C LZ with plug and pin connection to Daimler-Chrysler specification and cold start suppression 30°C
BO-LED as for BO, but with diode strip
SO368 inlet and outlet G ½ (without RI connection; only for DFN/F 40, 63, 100)
V FPM seals
W suitable for HFA and HFC emulsions

2.2 REPLACEMENT ELEMENT

0250 DN 010 BN4HC /-V

Size
0040, 0063, 0100, 0160, 0250, 0400

Type
DN

Filtration rating in µm
BN4HC, BH4HC: 003, 006, 010, 025 W/HC: 025, 050, 100, 200

Filter material
BN4HC, BH4HC, W/HC

Supplementary details
V (for descriptions, see point 2.1)

2.3 REPLACEMENT CLOGGING INDICATOR

VM 5 D . X /-L24

Type of indicator
VM differential pressure indicator up to 210 bar operating pressure (not for type LZ)
VD differential pressure indicator 420 bar operating pressure

Pressure setting
5 standard 5 bar, others on request

Type of clogging indicator (see Point 2.1)

Modification number
X the latest version is always supplied

Supplementary details
L..., LED, V, W (for descriptions, see point 2.1)

www.comoso.com

3. FILTER CALCULATION / SIZING

The total pressure drop of a filter at a certain flow rate Q is the sum of the housing Δp and the element Δp and is calculated as follows:

$$\Delta p_{total} = \Delta p_{housing} + \Delta p_{element}$$

$$\Delta p_{housing} = \text{(see Point 3.1)}$$

$$\Delta p_{element} = Q \cdot \frac{SK^*}{1000} \cdot \frac{viscosity}{30}$$

(*see Point 3.2)

For ease of calculation, our Filter Sizing Program is available on request free of charge.

NEW: Sizing online at www.hydac.com

3.1 Δp-Q HOUSING CURVES BASED ON ISO 3968

The housing curves apply to mineral oil with a density of 0.86 kg/dm³ and a kinematic viscosity of 30 mm²/s.
In this case, the differential pressure changes proportionally to the density.

DFN 40, 63, 100
LFN 40, 63, 100

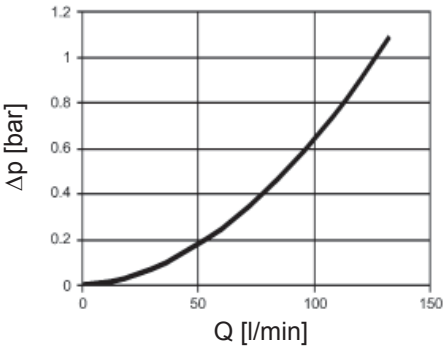

DFNF / LFNF 40, 63, 100

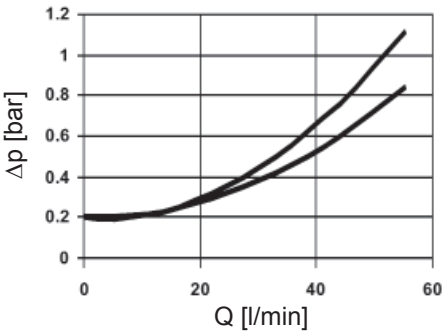

DFN 160, 250, 400

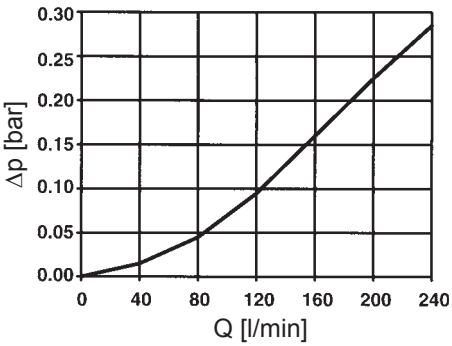

3.2 GRADIENT COEFFICIENTS (SK) FOR FILTER ELEMENTS

The gradient coefficients in mbar/(l/min) apply to mineral oils with a kinematic viscosity of 30 mm²/s. The pressure drop changes proportionally to the change in viscosity.

LFN/F	BH4HC				W/HC
DFN/F	3 µm	5 µm	10 µm	20 µm	–
40	40.4	24.8	16.4	10.9	0.966
63	29.0	18.2	11.7	7.6	0.54
100	19.0	11.7	7.7	5.3	0.325
160	8.0	5.1	3.8	2.5	0.168
250	5.4	3.4	2.8	1.9	0.101
400	3.4	2.1	1.7	1.1	0.068

BN4HC: DFN / DFNF / LFN / LFNF 40

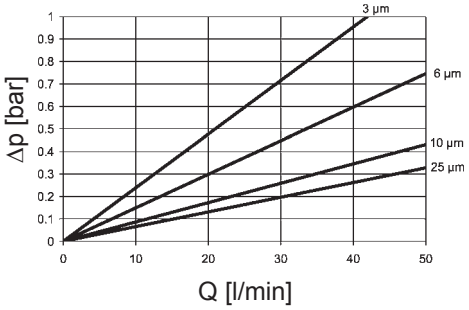

BN4HC: DFN 160

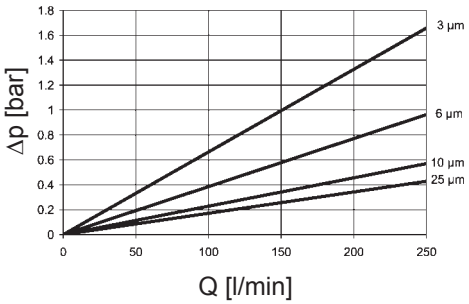

BN4HC: DFN / DFNF / LFN / LFNF 63

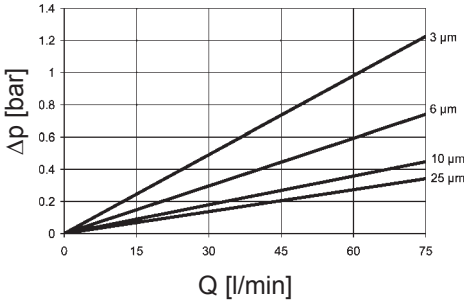

BN4HC: DFN 250

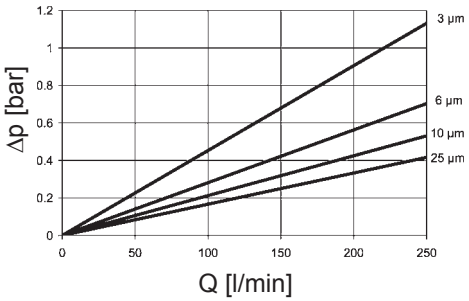

BN4HC: DFN / DFNF / LFN / LFNF 100

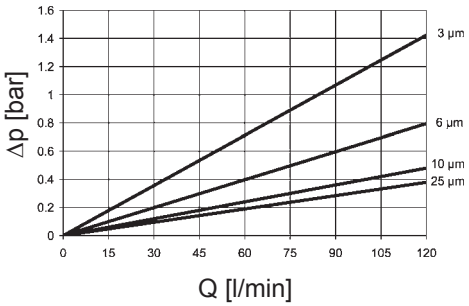

BN4HC: DFN 400

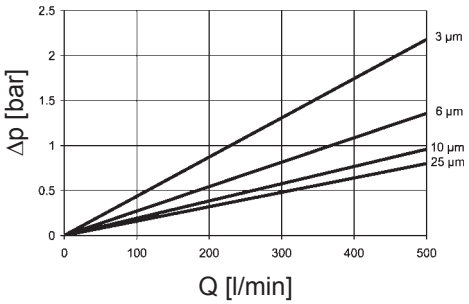

www.comoso.com

4. DIMENSIONS

LFN, LFNF

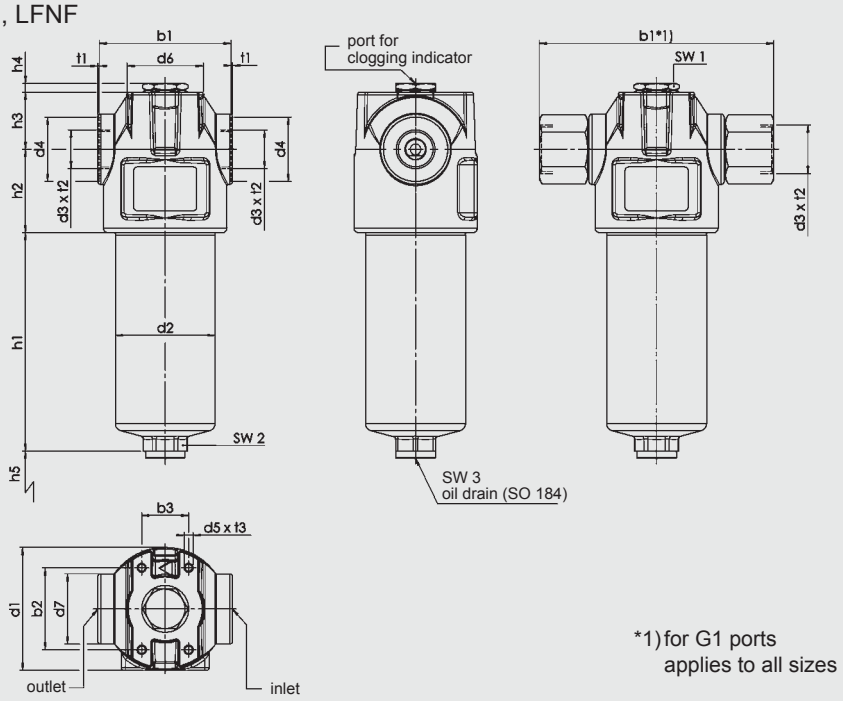

*1) for G1 ports applies to all sizes

Type	Weight incl. element [kg]	Volume of pressure chamber [l]
LFN 40	1.45	0.26
LFN 63	1.8	0.40
LFN 100	4.3	0.50
LFNF 40	1.45	0.26
LFNF 63	1.8	0.40
LFNF 100	4.3	0.50
DFN 40	5.0	0.22
DFN 63	6.0	0.33
DFN 100	6.25	0.50
DFN 160	20.0	1.10
DFN 250	22.0	1.70
DFN 400	26.5	2.70
DFNF 40	5.0	0.22
DFNF 63	6.0	0.33
DFNF 100	6.25	0.50

Type	b1	b2	b3	d1	d2	d3	d4	d5	d6	d7	h1	h2	h3	h4	h5	SW1	SW2	t1	t2	t3
LFN 40	90	56	32	84	68	G ½	34	M6	52	48	90	57	39	6	75	27	27	1	14	9
LFN 63	90	56	32	84	68	G ¾	44	M6	52	48	150	57	39	6	75	27	27	1	17	9
LFN 100	160*1)	56	32	84	65	G 1	-	M6	52	48	245.5	57	39	6	75	27	27	-	24.5	9
LFNF 40	90	56	32	84	68.2	G ½	34	M6	52	48	90	57	39	6	75	27	27	1	14	9
LFNF 63	90	56	32	84	68.2	G ¾	44	M6	52	48	150	57	39	6	75	27	27	1	17	9
LFNF 100	160*1)	56	32	84	65	G 1	-	M6	52	48	245.5	57	39	6	75	27	27	-	24.5	9

DFN / DFNF 40 - 100

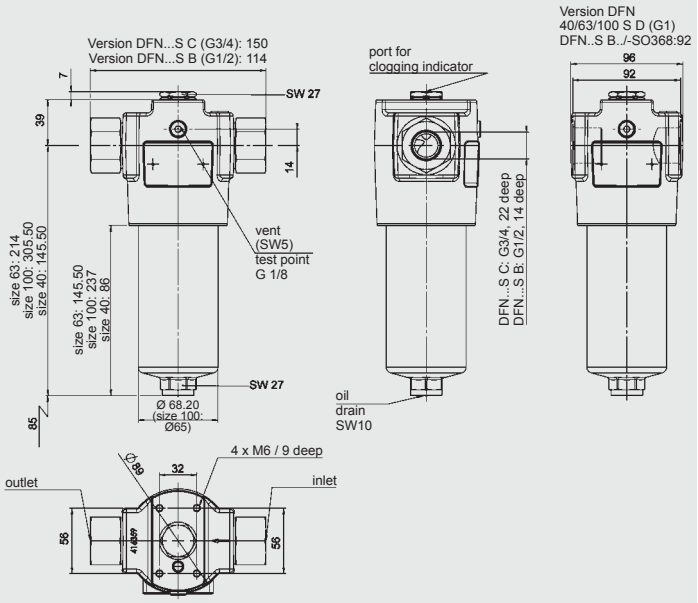

DFN 160 - 400

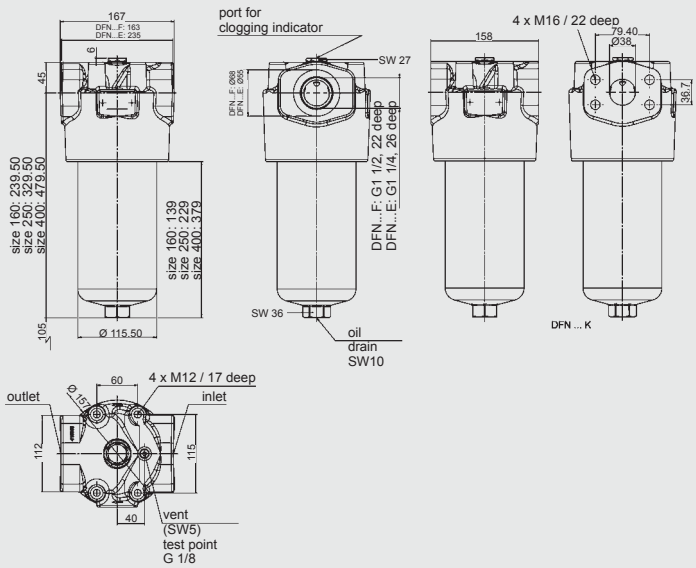

NOTE

The information in this brochure relates to the operating conditions and applications described.
For applications and operating conditions not described, please contact the relevant technical department.
Subject to technical modifications.

HYDAC FILTERTECHNIK GMBH
Industriegebiet
D-66280 Sulzbach/Saar, Germany
Tel.: 0 68 97 / 509-01
Fax: 0 68 97 / 509-300
Internet: www.hydac.com
E-mail: filter@hydac.com

www.comoso.com

Pressure Filter MDF
up to 350 l/min, up to 280 bar

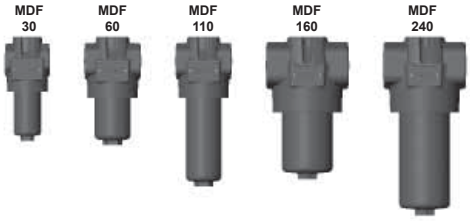

1. TECHNICAL SPECIFICATIONS

1.1 FILTER HOUSING

Construction

The filter housings are designed in accordance with international regulations. They consist of a filter head and a screw-in filter bowl.

Standard equipment:

- connection for a clogging indicator in filter head
- mounting holes in the filter head

1.2 FILTER ELEMENTS

HYDAC filter elements are validated and their quality is constantly monitored according to the following standards:

- ISO 2941
- ISO 2942
- ISO 2943
- ISO 3724
- ISO 3968
- ISO 11170
- ISO 16889

Contamination retention capacities in g

	Betamicron® (BN4HC)			
MDF	3 µm	5 µm	10 µm	20 µm
30	4.6	5.1	5.4	5.6
60	6.5	7.3	7.8	8.0
110	13.8	15.5	16.4	16.9
160	19.8	22.2	23.5	24.3
240	32.3	36.3	38.4	39.6

	Betamicron® (BH4HC)			
MDF	3 µm	5 µm	10 µm	20 µm
30	3	2.9	3.2	3.7
60	4.6	4.5	5	5.7
110	10.1	9.9	10.9	12.4
160	12.9	12.6	13.9	15.9
240	21.6	21.1	23.2	26.5

Filter elements are available with the following pressure stability values:

Betamicron® (BN4HC):	20 bar
Betamicron® (BH4HC):	210 bar
Wire mesh (W):	20 bar
Stainless steel fibre (V):	210 bar

1.3 FILTER SPECIFICATIONS

Nominal pressure	210 bar or 280 bar
Fatigue strength	min. 5 million cycles at 1.2 times nominal pressure (for other pressures, see Point 1.8)
Temperature range	-30 °C to +100 °C (-30 °C to -10 °C: p_{max}= 140 bar)
Material of filter head	EN-GJS-400-15
Material of filter bowl	Steel
Type of indicator	VM (Diff. pressure indicator up to 210 bar operating pressure) VD (Diff. pressure indicator up to 420 bar operating pressure)
Pressure setting of the clogging indicator	5 bar (others on request)
Bypass cracking pressure (optional)	6 bar (others on request)

1.4 SEALS

NBR (= Perbunan)

1.5 INSTALLATION

As inline filter

1.6 SPECIAL MODELS AND ACCESSORIES

- Bypass valve built into the head, separate from the main flow
- Oil drain plug
- Seals in FPM, EPDM
- Test and approval certificates

1.7 SPARE PARTS

See Original Spare Parts List

1.8 FATIGUE STRENGTH

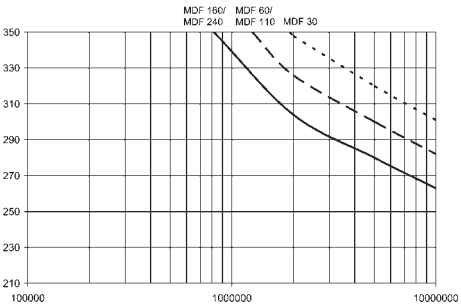

1.9 CERTIFICATES AND APPROVALS

- Test certificate 2.2
- Manufacturer's certificate O and M to DIN 55350, part 18
  Other certificates on request

1.10 COMPATIBILITY WITH HYDRAULIC FLUIDS ISO 2943

- Hydraulic oils H to HLPD DIN 51524
- Lubrication oils DIN 51517, API, ACEA, DIN 51515, ISO 6743
- Compressor oils DIN 51506
- Biodegradable operating fluids VDMA 24568 HETG, HEES, HEPG
- Fire-resistant fluids HFA, HFB, HFC and HFD
- Operating fluids with high water content (>50% water content) on request

1.11 IMPORTANT INFORMATION

- Filter housings must be earthed.
- When using electrical clogging indicators, the electrical power supply to the system must be switched off before removing the clogging indicator connector.

Symbol for hydraulic systems

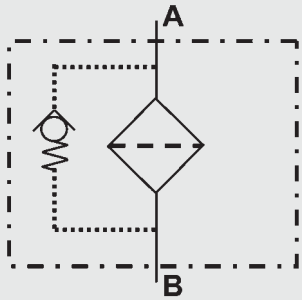

www.comoso.com

2. MODEL CODE (also order example)

MDF BN/HC 60 O C 10 D 1 . X /-L24

2.1 COMPLETE FILTER

Filter type
MDF

Filter material of filter element
BN/HC Betamicron® (BN4HC) W Stainl. steel wire mesh
BH/HC Betamicron® (BH4HC) V Stainless steel fibre

Size of filter or element
MDF: 30, 60, 110, 160, 240

Operating pressure
Threaded port: L = 210 bar (VM clogging indicator)
O = 280 bar (standard; VD clogging indicator)
Flange connection: L = 210 bar (3000 PSI flange) → VM clogging indicator

Type and size of connection

Type	Connection	Filter size 30	60	110	160	240
B	G ½	●				
C	G¾	●	●	●		
D	G1		●	●		
E	G1¼				●	●
F	G1½				●	●
H	SAE DN 13	●				
I	SAE DN 20		●	●		
J	SAE DN 32				●	●

Preferred models

Filtration rating in µm
BN/HC, BH/HC, V: 3, 5, 10, 20
W: 25, 50, 100, 200

Type of clogging indicator
Y plastic blanking plug in indicator port
A steel blanking plug in indicator port
B visual
C electrical
D visual and electrical
for other clogging indicators, see brochure no. 7.050../..

Type code
1

Modification number
X the latest version is always supplied

Supplementary details
B. bypass cracking pressure (e.g. B6 = 6 bar); without details = without bypass valve
L... light with appropriate voltage (24V, 48V, 110V, 220V)
LED 2 light emitting diodes up to 24 Volt
only for clogging indicators type "D"
SO184 pressure release/oil drain screw
V FPM seals
W suitable for HFA, HFC oil-water emulsions (only necessary when using a clogging indicator or V or W elements)

2.2 REPLACEMENT ELEMENT

0060 D 010 BN4HC /-V

Size
0030, 0060, 0110, 0160, 0240

Type
D

Filtration rating in µm
BN4HC, BH4HC, V: 003, 005, 010, 020
W: 025, 050, 100, 200

Filter material
BN4HC, BH4HC, V, W

Supplementary details
V, W (for descriptions, see point 2.1)

2.3 REPLACEMENT CLOGGING INDICATOR

VM 5 D . X /-L24

Type of indicator
VM Diff. pressure indicator up to 210 bar oper. pressure
VD Diff. pressure indicator 420 bar oper. pressure

Pressure setting
5 standard 5 bar, others on request

Type of clogging indicator
D (see Point 2.1)

Modification number
X the latest version is always supplied

Supplementary details
L..., LED, V, W (for descriptions, see point 2.1)

www.comoso.com

3. FILTER CALCULATION / SIZING

The total pressure drop of a filter at a certain flow rate Q is the sum of the housing Δp and the element Δp and is calculated as follows:

$$\Delta p_{total} = \Delta p_{housing} + \Delta p_{element}$$

$$\Delta p_{housing} = \text{(see Point 3.1)}$$

$$\Delta p_{element} = Q \cdot \frac{SK^*}{1000} \cdot \frac{viscosity}{30}$$

(*see point 3.2)

For ease of calculation, our Filter Sizing Program is available on request free of charge.

NEW: Sizing online at www.hydac.com

3.1 Δp-Q HOUSING CURVES BASED ON ISO 3968

The housing curves apply to mineral oil with a density of 0.86 kg/dm³ and a kinematic viscosity of 30 mm²/s.
In this case, the differential pressure changes proportionally to the density.

MDF 30

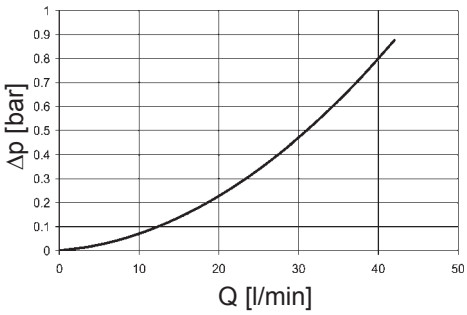

MDF 60-110

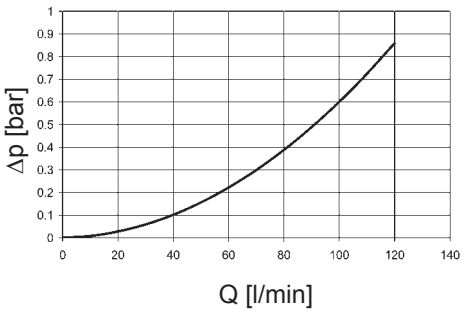

MDF 160-240

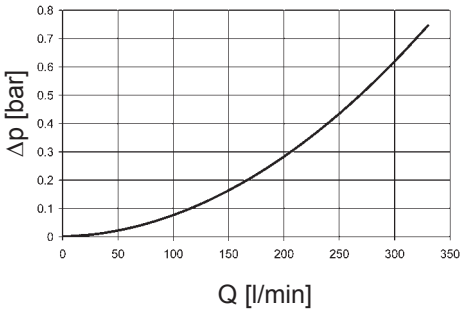

3.2 GRADIENT COEFFICIENTS (SK) FOR FILTER ELEMENTS

The gradient coefficients in mbar/(l/min) apply to mineral oils with a kinematic viscosity of 30 mm²/s. The pressure drop changes proportionally to the change in viscosity.

MDF	V				W	BH4HC			
	3 µm	5 µm	10 µm	20 µm	–	3 µm	5 µm	10 µm	20 µm
30	18.0	13.0	7.4	3.7	3.367	91.2	50.7	36.3	19.0
60	16.0	11.0	6.5	3.3	1.683	58.6	32.6	18.1	12.2
110	8.3	6.0	4.2	2.1	0.918	25.4	14.9	8.9	5.6
160	4.5	3.2	2.3	1.4	0.631	16.8	10.4	5.9	4.4
240	3.2	2.4	1.9	1.1	0.421	10.6	6.8	3.9	2.9

BN4HC: MDF 30

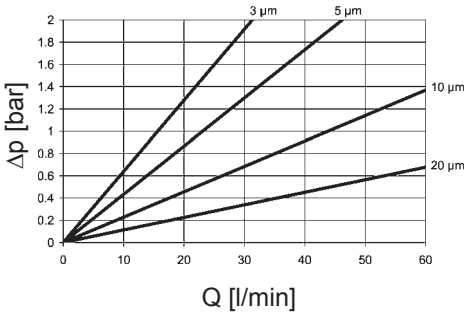

BN4HC: MDF 60

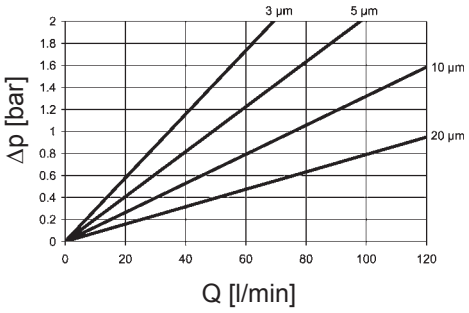

BN4HC: MDF 110

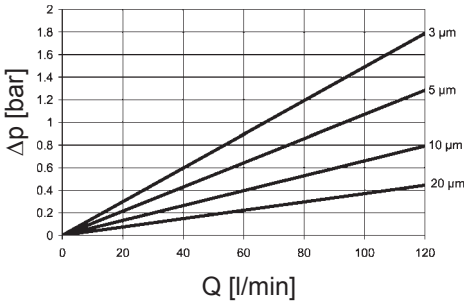

BN4HC: MDF 160

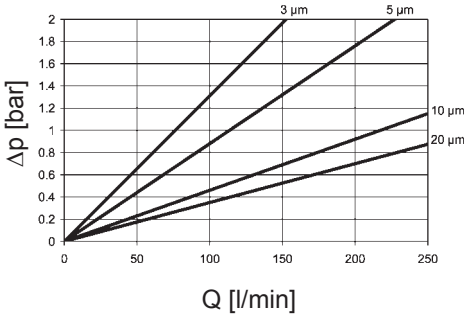

BN4HC: MDF 240

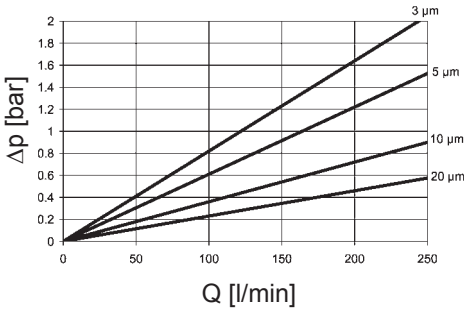

www.comoso.com

4. DIMENSIONS

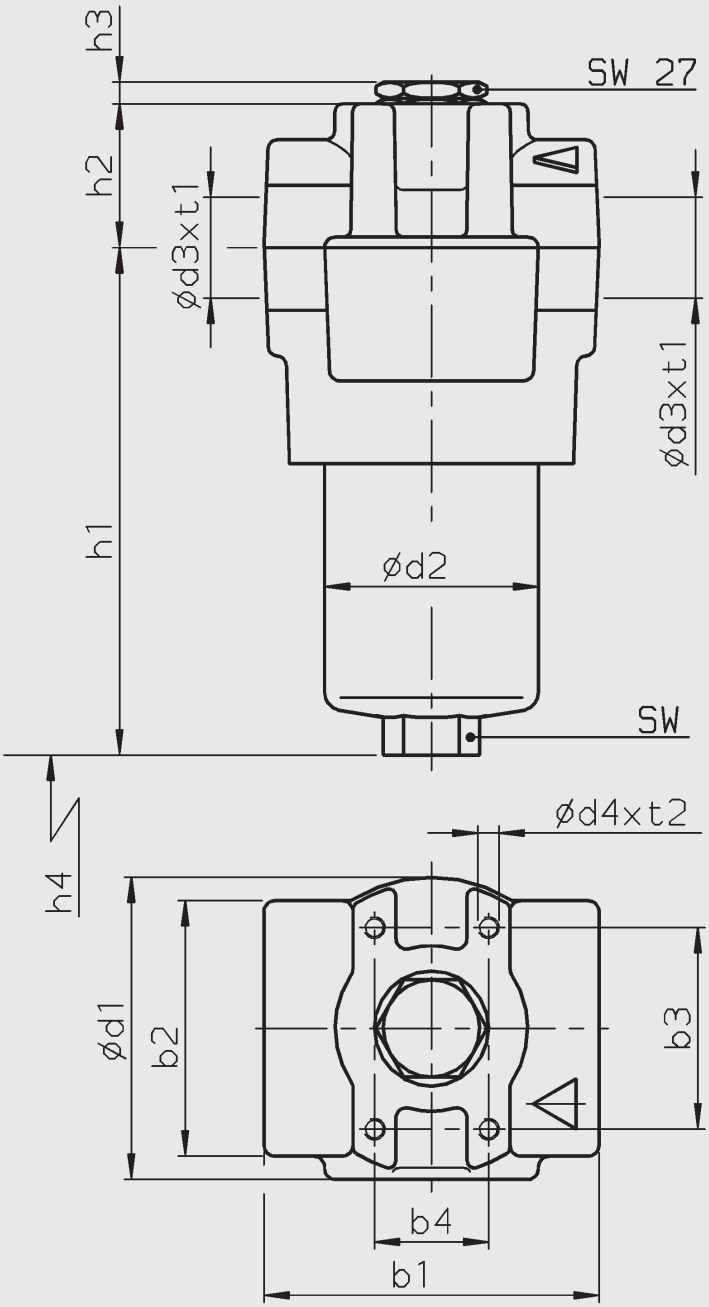

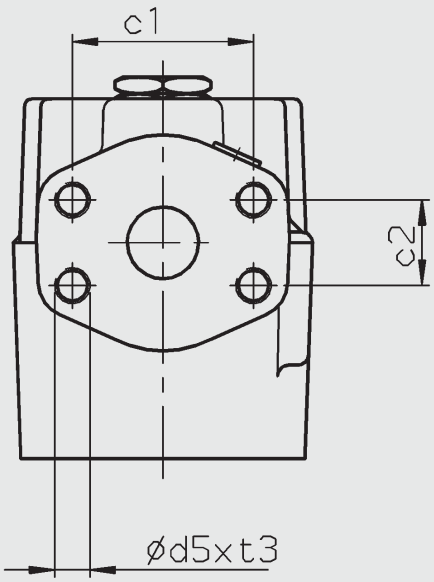

MDF	b1	b2	b3	b4	c1	c2	d1	d2	d3	d4	d5	h1	h2	h3	h4	SW	t1	t2	t3	Weight incl. element [kg]	Volume of pressure chamber [l]
30 (B/C)	71	55	45	30	-	-	69	45	G½ - G¾	M5	-	133	38	6	75	19	14 - 17	6	-	2.3	0.1
30 (H)	70	55	45	30	38.1	17.5	69	45	SAE DN 13	M5	M8	133	38	6	75	19	-	6	12	2.3	0.1
60 (C/D)	90	71	56	32	-	-	86	59	G¾ - G1	M6	-	138	40	6	85	27	17 - 19	9	-	4.1	0.18
60 (I)	89	71	56	32	47.6	22.2	86	59	SAE DN 20	M6	M10	138	40	6	85	27	-	9	15	4.1	0.18
110 (C/D)	90	71	56	32	-	-	86	59	G¾ - G1	M6	-	206	40	6	85	27	17 - 19	9	-	4.6	0.32
110 (I)	89	71	56	32	47.6	22.2	86	59	SAE DN 20	M6	M10	206	40	6	85	27	-	9	15	4.6	0.32
160 (E/F)	133	95	85	35	-	-	119	84	G1¼ - G1½	M10	-	187	47	6	105	32	21 - 23	14	-	9.6	0.55
160 (J)	133	95	85	35	58.7	30.2	119	84	SAE DN 32	M10	M10	187	47	6	105	32	-	14	15	9.6	0.55
240 (E/F)	133	95	85	35	-	-	119	84	G1¼ - G1½	M10	-	246	47	6	105	32	21 - 23	14	-	10.5	0.79
240 (J)	133	95	85	35	58.7	30.2	119	84	SAE DN 32	M10	M10	246	47	6	105	32	-	14	15	10.5	0.79

(.) = connection size (see Point 2.1: Type and size of connection)

NOTE

The information in this brochure relates to the operating conditions and applications described.
For applications or operating conditions not described, please contact the relevant technical department.
Subject to technical modifications.

HYDAC FILTERTECHNIK GMBH
Industriegebiet
D-66280 Sulzbach/Saar, Germany
Tel.: 0 68 97 / 509-01
Fax: 0 68 97 / 509-300
Internet: www.hydac.com
E-mail: filter@hydac.com

www.comoso.com

Inline Filter HDF
Inline Filter for Reversible Flow HDFF
up to 380 l/min, up to 280 (420) bar

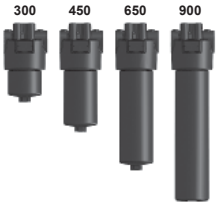

1. TECHNICAL SPECIFICATIONS

1.1 FILTER HOUSING

Construction

The filter housings are designed in accordance with international regulations. They consist of a filter head and a screw-in filter bowl. HDFF filters (on request) are suitable for flow in both directions.

Standard equipment:

- port in L-configuration
- without bypass valve
- connection for a clogging indicator in filter head

1.2 FILTER ELEMENTS

HYDAC filter elements are validated and their quality is constantly monitored according to the following standards:

- ISO 2941
- ISO 2942
- ISO 2943
- ISO 3724
- ISO 3968
- ISO 11170
- ISO 16889

Contamination retention capacities in g

	Betamicron® (BN4HC)			
HDF/ HDFF	3 µm	5 µm	10 µm	20 µm
300	26.1	29.3	31.0	32.0
450	52.1	58.7	62.0	63.9
650	85.4	96.1	101.5	104.7
900	112.8	127.0	134.1	138.3

	Betamicron® (BH4HC)			
HDF/ HDFF	3 µm	5 µm	10 µm	20 µm
300	17.0	16.6	18.3	20.9
450	35.0	34.2	37.6	42.9
650	58.3	57.1	62.8	71.6
900	77.3	75.7	83.1	94.8

Filter elements are available with the following pressure stability values:

Betamicron® (BN4HC): 20 bar
Betamicron® (BH4HC): 210 bar

Other filtration ratings on request.

1.3 FILTER SPECIFICATIONS

Nominal pressure	280 (420) bar
Fatigue strength	0 to 280 bar (min. 10^6 cycles) 0 to 420 bar (min. 250,000 cycles)
Temperature range	-30 °C to +100 °C (-30 °C to -10 °C: p_{max} = 140 bar)
Material of filter head	EN-GJS 400-15
Material of filter bowl	Steel
Type of clogging indicator	VD (differential pressure indication up to 420 bar operating pressure)
Pressure setting of clogging indicator	5 bar for HDF (others on request) 8 bar for HDFF (others on request)
Cracking pressure of bypass only for HDF filters (optional)	6 bar (others on request)

1.4 SEALS

NBR (= Perbunan)

1.5 INSTALLATION

As inline filter with or without reversible oil flow

1.6 SPECIAL MODELS AND ACCESSORIES

- Seals in FPM, EPDM
- With bypass valve (only HDF filter)
- With No-Element valve (only HDF filter in L-configuration)
- With oil drain plug

1.7 SPARE PARTS

See Original Spare Parts List

1.8 CERTIFICATES AND APPROVALS

On request

1.9 COMPATIBILITY WITH HYDRAULIC FLUIDS ISO 2943

- Hydraulic oils H to HLPD DIN 51524
- Lubrication oils DIN 51517, API, ACEA, DIN 51515, ISO 6743
- Compressor oils DIN 51506
- Biodegradable operating fluids VDMA 24568 HETG, HEES, HEPG
- Fire-resistant fluids HFA, HFB, HFC and HFD
- Operating fluids with high water content (>50% water content) on request

1.10 IMPORTANT INFORMATION

- Filter housings must be earthed.
- When using electrical clogging indicators, the electrical power supply to the system must be switched off before removing the clogging indicator connector.

Symbol for hydraulic systems

HDF

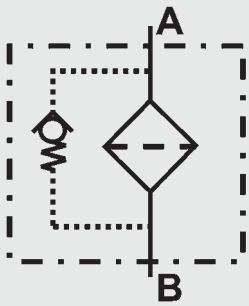

HDFF

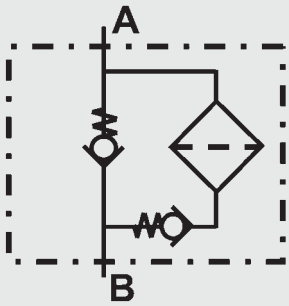

2. MODEL CODE (also order example)

HDF BN/HC 450 O L E 10 D 1 . X /-L24

2.1 COMPLETE FILTER

Filter type
HDF or HDFF (HDFF on request)

Filter material
BN/HC Betamicron® (BN4HC)
BH/HC Betamicron® (BH4HC)

Size of filter or element
HDF/HDFF: 300, 450, 650, 900

Operating pressure
O 280 bar

Head type
L Flow path in L-configuration (standard version)

Type and size of connection

Type	Connection	300	450	650	900
D	G 1	●	●	●	●
E	G1 ¼	●	●	●	●
F	G1 ½	●	●	●	●

Filtration rating in µm
BN/HC, BH/HC: 3, 5, 10, 20

Type of clogging indicator
Y plastic blanking plug in indicator port
A steel blanking plug in indicator port
BM visual
C electrical
D visual and electrical
] for other clogging indicators, see brochure no. 7.050../..

Type code
1

Modification number
X the latest version is always supplied

Supplementary details
B. bypass cracking pressure (e.g. B6 = 6 bar); without details = without bypass valve
L... light with appropriate voltage (24, 48, 110, 220 Volt)
LED 2 light-emitting diodes up to 24 Volt
] only for clogging indicators type "D"
NEV No Element valve (only for HDF filters in L-configuration)
SO184 pressure release/oil drain screw
V FPM seals

2.2 REPLACEMENT ELEMENT

0450 D 010 BN4HC /-V

Size
0300, 0450, 0650, 0900

Type
D

Filtration rating in µm
BN4HC, BH4HC: 003, 005, 010, 020

Filter material
BN4HC, BH4HC

Supplementary details
V (for descriptions, see point 2.1)

2.3 REPLACEMENT CLOGGING INDICATOR

VD 5 D . X /-L24

Type
VD differential pressure indicator up to 420 bar operating pressure

Pressure setting
5 standard 5 bar (for HDF filters)
8 standard 8 bar (for HDFF filters)
] others on request

Type of clogging indicator (see Point 2.1)

Modification number
X the latest version is always supplied

Supplementary details
V (for descriptions, see point 2.1)

www.comoso.com

3. FILTER CALCULATION / SIZING

The total pressure drop of a filter at a certain flow rate Q is the sum of the housing Δp and the element Δp and is calculated as follows:

$$\Delta p_{total} = \Delta p_{housing} + \Delta p_{element}$$

$$\Delta p_{housing} = \text{(see Point 3.1)}$$

$$\Delta p_{element} = Q \cdot \frac{SK^*}{1000} \cdot \frac{viscosity}{30}$$

(*see Point 3.2)

For ease of calculation, our Filter Sizing Program is available on request free of charge.

NEW: Sizing online at www.hydac.com

3.1 Δp-Q HOUSING CURVES BASED ON ISO 3968

The housing curves apply to mineral oil with a density of 0.86 kg/dm³ and a kinematic viscosity of 30 mm²/s.
In this case, the differential pressure changes proportionally to the density.

HDF

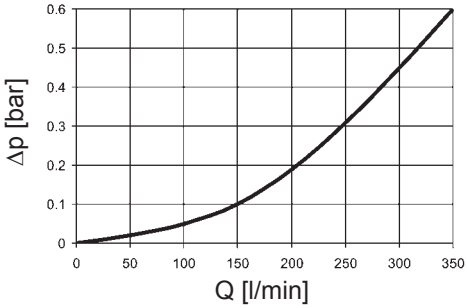

HDF with NEV

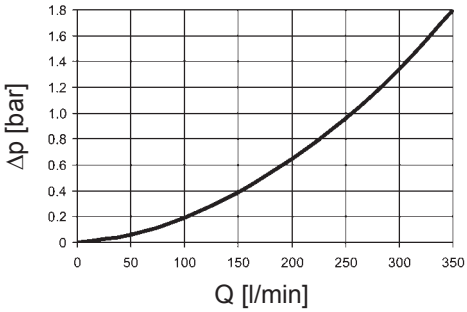

3.2 GRADIENT COEFFICIENTS (SK) FOR FILTER ELEMENTS

The gradient coefficients in mbar/(l/min) apply to mineral oils with a kinematic viscosity of 30 mm²/s. The pressure drop changes proportionally to the change in viscosity.

	BH4HC			
	3 µm	**5 µm**	**10 µm**	**20 µm**
300	16.0	8.9	7.1	3.3
450	7.8	4.3	3.4	1.6
650	4.7	2.6	2.1	1.0
900	3.5	2.0	1.6	0.7

BN4HC: 300

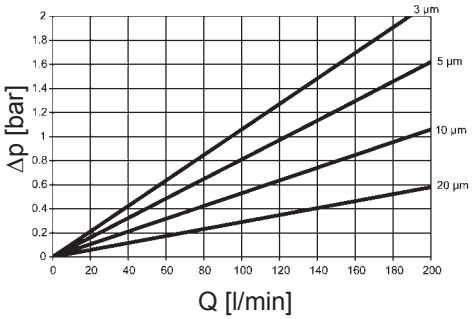

BN4HC: 650

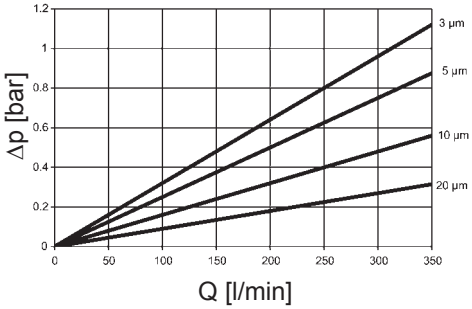

BN4HC: 450

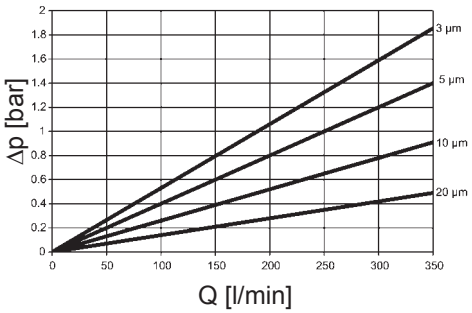

BN4HC: 900

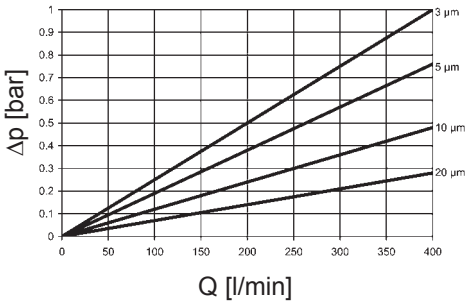

www.comoso.com

4. DIMENSIONS

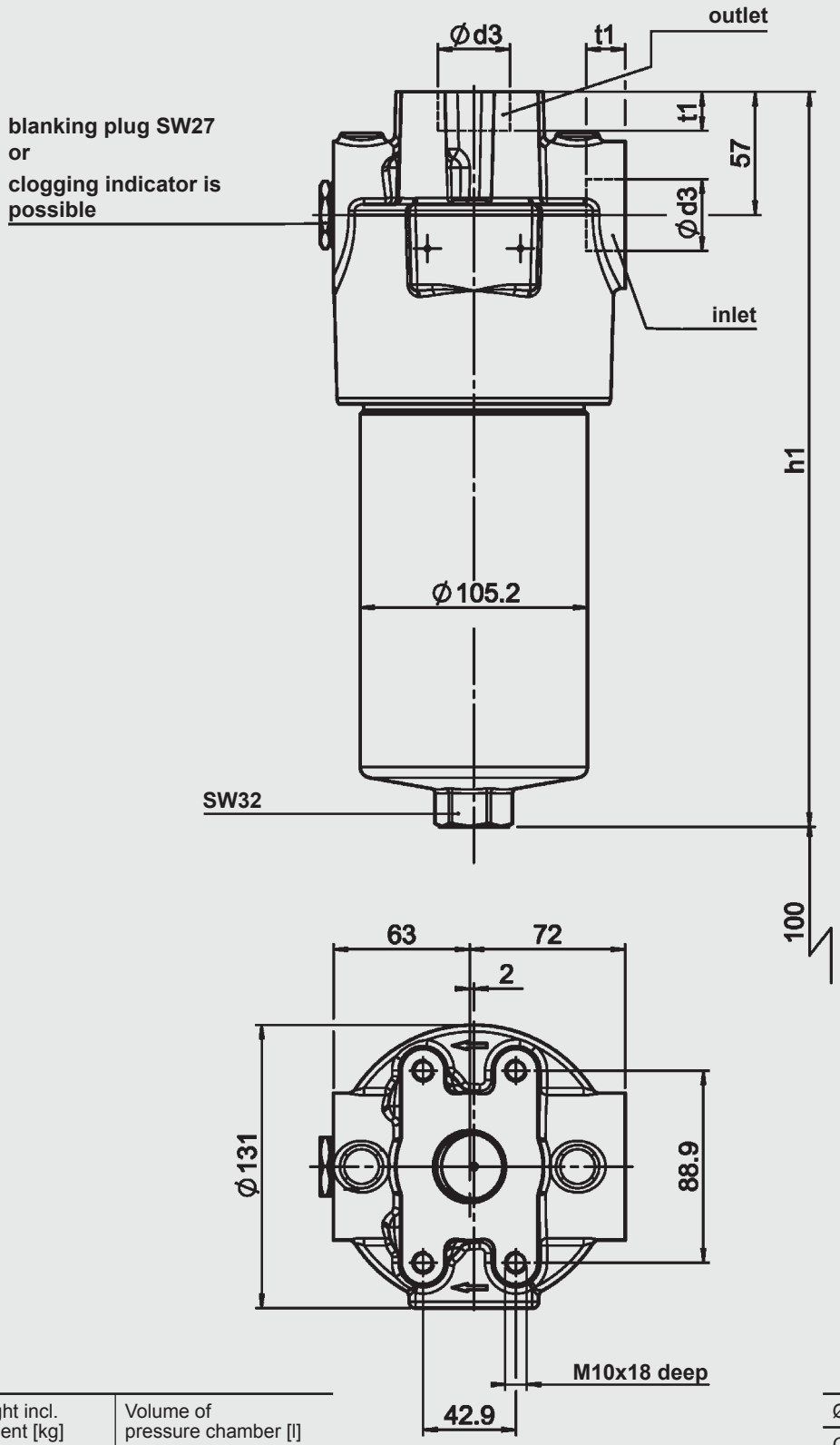

HDF/ HDFF	h1	Weight incl. element [kg]	Volume of pressure chamber [l]
300	246	11.2	0.8
450	339	13.1	1.4
650	460	16.2	2.1
900	558	21.5	2.7

Ød3	t1
G1	18
G1 1/4	20
G1 1/2	22

NOTE

The information in this brochure relates to the operating conditions and applications described.
For applications or operating conditions not described, please contact the relevant technical department.
Subject to technical modifications.

HYDAC FILTERTECHNIK GMBH
Industriegebiet
D-66280 Sulzbach/Saar, Germany
Tel: 0 68 97 / 509-01
Fax: 0 68 97 / 509-300
Internet: www.hydac.com
E-Mail: filter@hydac.com

www.comoso.com

Pressure Filter DF Pressure Filter for Reversible Oil Flow DFF/DFFX

up to 2000 l/min, up to 420 bar

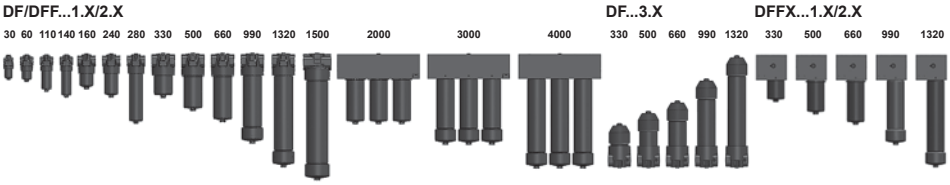

1. TECHNICAL SPECIFICATIONS

1.1 FILTER HOUSING

Construction

The filter housings are designed in accordance with international regulations. They consist of a filter head and a screw-in filter bowl. DFF filters are suitable for flow in both directions. The Δp optimized filters DFFX are also suitable for flow in both directions and the filter ports are in L configuration.

Standard equipment:

- connection for a clogging indicator in filter head
- drain screw with pressure relief (for size DF/DFF/DFFX 330 and above)
- 1 or 2-piece filter bowl available as an option for DF/DFF/DFFX 280-660 and DF 2000
- 2-piece filter bowl standard for size DF/DFF/DFFX 990 and above

1.2 FILTER ELEMENTS

HYDAC filter elements are validated and their quality is constantly monitored according to the following standards:

- ISO 2941, ISO 2942, ISO 2943, ISO 3724, ISO 3968, ISO 11170, ISO 16889

Contamination retention capacities in g

		Betamicron® (BN4HC)			
DF/DFF/ DFFX	Elements	3 µm	5 µm	10 µm	20 µm
30	1x0030 D	4.6	5.1	5.4	5.6
60	1x0060 D	6.5	7.3	7.8	8.0
110	1x0110 D	13.8	15.5	16.4	16.9
140	1x0140 D	18.1	20.3	21.5	22.2
160	1x0160 D	19.8	22.2	23.5	24.3
240	1x0240 D	32.3	36.3	38.4	39.6
280	1x0280 D	70.6	79.3	83.9	86.6
330	1x0330 D	47.2	53.1	56.1	57.9
500	1x0500 D	76.9	86.5	91.5	94.4
660	1x0660 D	102.2	114.9	121.5	125.4
990	1x0990 D	154.5	173.7	183.7	189.5
1320	1x1320 D	209.9	236.0	249.6	257.5
1500	1x1500 D	220.0	226.0	238.0	246.0
2000	3x0660 D	306.6	344.7	364.5	376.2
3000	3x0990 D	463.5	521.1	551.1	568.5
4000	3x1320 D	629.7	708.0	748.8	772.5

Filter elements are available with the following pressure stability values:

Betamicron® (BN4HC):	20 bar
Betamicron® (BH4HC):	210 bar
Wire mesh (W):	20 bar
Stainless steel fibre (V):	210 bar

1.3 FILTER SPECIFICATIONS

Nominal pressure	420 bar
Fatigue strength	at nominal pressure $2x10^6$ cycles from 0 to nominal pressure (size 30 to 1320) $3x10^5$ cycles at 420 bar (size 1500) $3x10^6$ cycles at 280 bar (size 1500) 10^6 cycles at 315 bar (size 2000-4000)
Temperature range	-30 °C to +100 °C (-30 °C to -10 °C: p_{max} = 210 bar)
Material of filter head	EN-GJS 400-15, ADI (size 330 - 1500)
Material of filter bowl	Steel
Type of clogging indicator	VD (differential pressure indication up to 420 bar operating pressure)
Pressure setting of clogging indicator	DF: 5 bar DFF/DFFX: 8 bar (others on request)
Cracking pressure of bypass only for size 30-1320 (optional)	6 bar (others on request)

		Betamicron® (BH4HC)			
DF/DFF/ DFFX	Elements	3 µm	5 µm	10 µm	20 µm
30	1x0030 D	3.0	2.9	3.2	3.7
60	1x0060 D	4.6	4.5	5.0	5.7
110	1x0110 D	10.1	9.9	10.9	12.4
140	1x0140 D	13.3	13.0	14.3	16.3
160	1x0160 D	12.9	12.6	13.9	15.9
240	1x0240 D	21.6	21.1	23.2	26.5
280	1x0280 D	48.1	47.1	51.8	59.1
330	1x0330 D	34.6	33.9	37.2	42.5
500	1x0500 D	57.5	56.3	61.8	70.5
660	1x0660 D	76.8	75.2	82.6	94.3
990	1x0990 D	111.8	109.4	120.2	137.2
1320	1x1320 D	153.8	150.7	165.5	188.8
1500	1x1500 D	126.4	137.8	160.9	195.3
2000	3x0660 D	230.4	225.6	247.8	282.9
3000	3x0990 D	335.4	328.2	360.6	411.6
4000	3x1320 D	461.4	452.1	496.5	566.4

1.4 SEALS

NBR (= Perbunan)

1.5 INSTALLATION

As inline filter with or without reversible oil flow

1.6 SPECIAL MODELS AND ACCESSORIES

- Seals in FPM, EPDM
- With bypass valve (only DF filter)
- Oil drain screw, up to DF/DFF 280
- In ADI material
  - for high duty cycle (DF/DFF 330-1500)
- Element top-removable - TKZ 3.X (only DF filters 330 - 1320)
- ΔP-optimized filter (only DFFX filter 330-1320)

1.7 SPARE PARTS

See Original Spare Parts List

1.8 CERTIFICATES AND APPROVALS

On request

1.9 COMPATIBILITY WITH HYDRAULIC FLUIDS ISO 2943

- Hydraulic oils H to HLPD DIN 51524
- Lubrication oils DIN 51517, API, ACEA, DIN 51515, ISO 6743
- Compressor oils DIN 51506
- Biodegradable operating fluids VDMA 24568 HETG, HEES, HEPG
- Fire-resistant fluids HFA, HFB, HFC and HFD
- Operating fluids with high water content (>50% water content) on request

1.10 IMPORTANT INFORMATION

- Filter housings must be earthed.
- When using electrical clogging indicators, the electrical power supply to the system must be switched off before removing the clogging indicator connector.

Symbol for hydraulic systems

DF DFF/DFFX

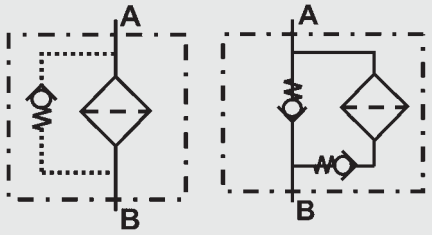

E 7.501.15/03.12

www.comoso.com

2. MODEL CODE (also order example)

DF BN/HC 1500 T L L 10 D 1 . X /-L24

2.1 COMPLETE FILTER

Filter type
DF, DFF, DFFX

Filter material

BN/HC	Betamicron® (BN4HC)	W	Wire mesh
BH/HC	Betamicron® (BH4HC)	V	Stainless steel fibre

Size of filter or element
DF: 30, 60, 110, 140, 160, 240, 280, 330, 500, 660, 990, 1320, 1500, 2000, 3000, 4000
DFF: 60, 110, 140, 160, 240, 280, 330, 500, 660, 990, 1320, 1500
DFFX: 330, 500, 660, 990, 1320

Operating pressure
T 420 bar

Head design
no details inline filter ports (not possible for DFFX filters)
L filter ports in L configuration (only DF/DFF 1500 and for all DFFX filters)

Type and size of connection

Type	Connection type	Filter size 30	60	110	140	160	240	280	330	500	660	990	1320	1500	2000	3000	4000
B	G ½	●															
C	G ¾		●	●	●												
E	G1 ¼					●	●	●									
F	G1 ½								●	●	●	●	●				
G	G2													●			
I	SAE DN 20		●	●	●												
J	SAE DN 32					●	●	●									
L	SAE DN 50								●	●	●	●	●	●	●	●	●
N	SAE DN 80														●	●	●

Preferred models

Filtration rating in µm
BN/HC, BH/HC, V: 3, 5, 10, 20 W: 25, 50, 100, 200

Type of clogging indicator
Y plastic blanking plug in indicator port
A steel blanking plug in indicator port
B visual
C electrical
D visual and electrical
for other clogging indicators, see brochure no. 7.050../..

Type code (TKZ)
1 one-piece filter bowl (up to DF/DFF/DFFX 660; DF 2000)
2 two-piece filter bowl (size DF/DFF/DFFX 280)
3 element top-removable (only DF 330 - 1320)

Modification number
X the latest version is always supplied

Supplementary details
ADI ADI material - for high duty cycle (only DF/DFF 330 - 1500)
B. bypass cracking pressure (e.g. B6 = 6 bar); without details = without bypass valve
L... light with appropriate voltage (24V, 48V, 110V, 220V)
LED 2 light emitting diodes up to 24 Volt type "D"
(L... and LED: only for clogging indicators)
P26 with 26" element (only DF/DFF 1500)
P39 with 39" element (only DF/DFF 1500)
SO184 pressure release/oil drain screw (standard for size DF/DFF 330 and above)
V FPM seals
W suitable for HFA, HFC oil-water emulsions (only necessary when using a clogging indicator or V or W elements)

2.2 REPLACEMENT ELEMENT

1500 D 010 BN4HC /-V

Size
0030, 0060, 0110, 0140, 0160, 0240, 0280, 0330, 0500, 0660, 0990, 1320, 1500

Type
D

Filtration rating in µm
BN4HC, BH4HC, V: 003, 005, 010, 020
W: 025, 050, 100, 200

Filter material
BN4HC, BH4HC, W, V

Supplementary details
P26, P39, V, W (for descriptions, see Point 2.1)

2.3 REPLACEMENT CLOGGING INDICATOR

VD 5 D . X /-L24

Type
VD Differential pressure indicator up to 420 bar operating pressure

Pressure setting
5 standard for DF filter: 5 bar
8 standard for DFF/DFFX filters: 8 bar
others on request

Type of clogging indicator (see Point 2.1)

Modification number
X the latest version is always supplied

Supplementary details
L..., LED, V, W (for descriptions, see point 2.1)

www.comoso.com

3. FILTER CALCULATION / SIZING

The total pressure drop of a filter at a certain flow rate Q is the sum of the housing Δp and the element Δp and is calculated as follows:

$\Delta p_{total} = \Delta p_{housing} + \Delta p_{element}$

$\Delta p_{housing}$ = (see Point 3.1)

$\Delta p_{element} = Q \cdot \frac{SK^*}{1000} \cdot \frac{viscosity}{30}$

(*see Point 3.2)

For ease of calculation, our Filter Sizing Program is available on request free of charge.

NEW: Sizing online at www.hydac.com

3.1 Δp-Q HOUSING CURVES BASED ON ISO 3968

The housing curves apply to mineral oil with a density of 0.86 kg/dm³ and a kinematic viscosity of 30 mm²/s.
In this case, the differential pressure changes proportionally to the density.

DF 30

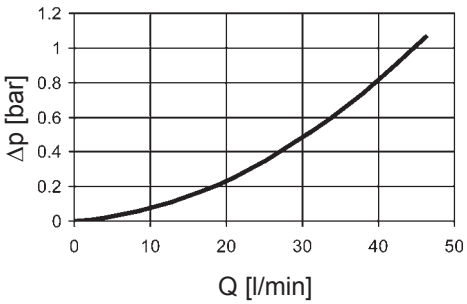

DF 60, 110, 140

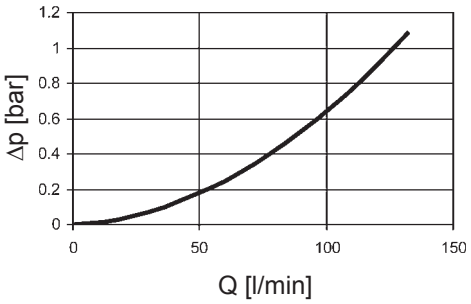

DF 160, 240, 280

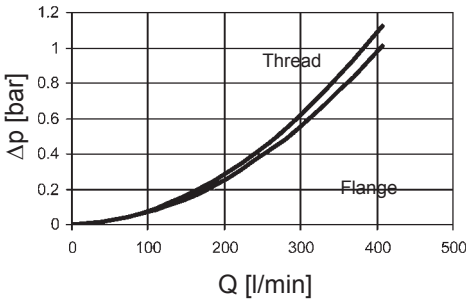

DF 330, 500, 660, 990, 1320

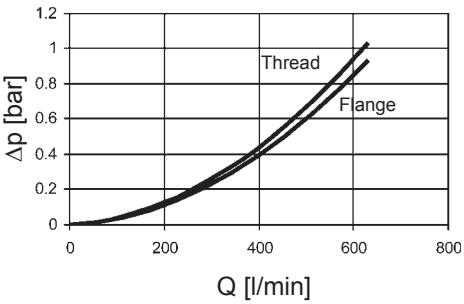

DF 1500

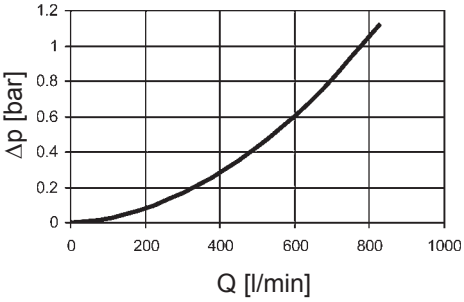

DF 2000, 3000, 4000

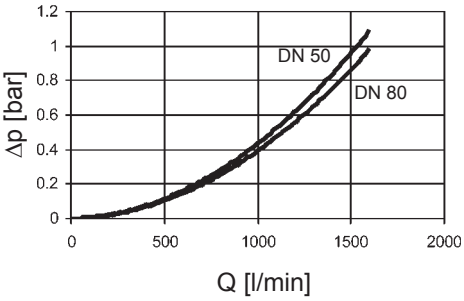

DFF 60, 110, 140

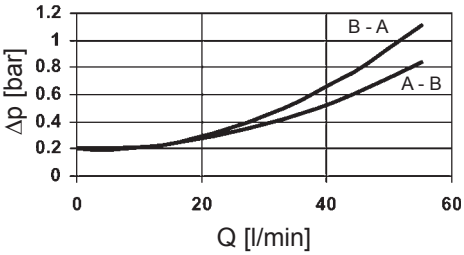

DFF 160, 240, 280

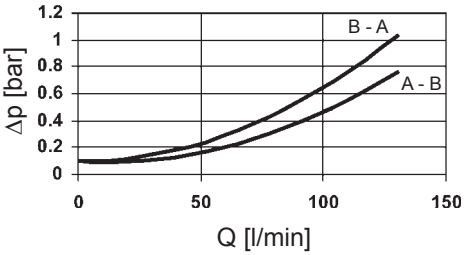

DFF 330, 500, 660, 990, 1320

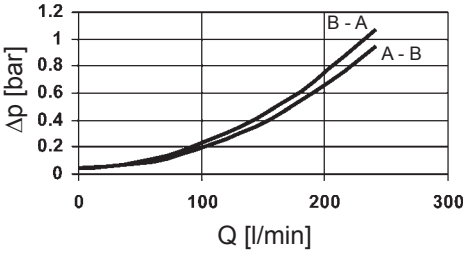

DFF 1500

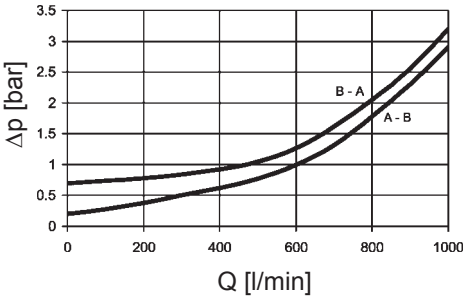

Δp optimized
DFFX 330, 500, 660, 990, 1320

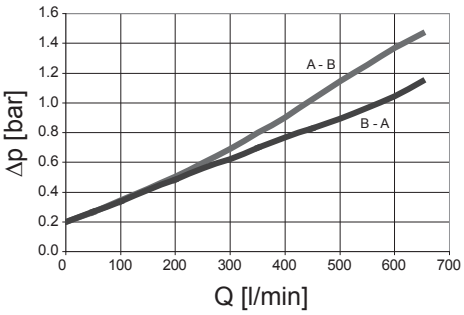

www.comoso.com

3.2 GRADIENT COEFFICIENTS (SK) FOR FILTER ELEMENTS

The gradient coefficients in mbar/(l/min) apply to mineral oils with a kinematic viscosity of 30 mm²/s. The pressure drop changes proportionally to the change in viscosity.

DF/DFF/	V				W	BH4HC			
DFFX	3 µm	5 µm	10 µm	20 µm	–	3 µm	5 µm	10 µm	20 µm
30	18.4	13.5	7.5	3.6	3.030	91.2	50.7	36.3	19.0
60	16.0	9.3	5.4	3.3	0.757	58.6	32.6	18.1	12.2
110	8.2	5.6	3.3	2.2	0.413	25.4	14.9	8.9	5.6
140	5.8	4.8	3.1	2.3	0.324	19.9	11.3	8.1	4.3
160	4.6	3.2	2.3	1.4	0.284	16.8	10.4	5.9	4.4
240	3.1	2.5	1.7	1.1	0.189	10.6	6.8	3.9	2.9
280	2.3	1.7	1.2	0.8	0.162	5.7	3.4	1.8	1.6
330	2.2	1.8	1.2	0.8	0.138	7.7	4.5	2.8	2.0
500	1.5	1.2	0.8	0.5	0.091	4.2	2.6	1.5	1.2
660	1.1	0.9	0.6	0.4	0.069	3.3	1.9	1.0	0.9
990	0.8	0.6	0.4	0.3	0.046	2.2	1.3	0.8	0.6
1320	0.6	0.5	0.3	0.2	0.035	1.6	1.0	0.6	0.4
1500	–	–	–	–	–	1.4	0.8	0.6	0.5

BN4HC: 30

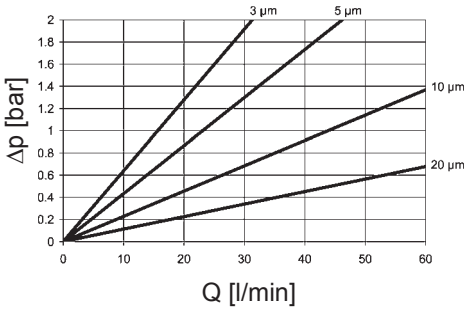

BN4HC: 60

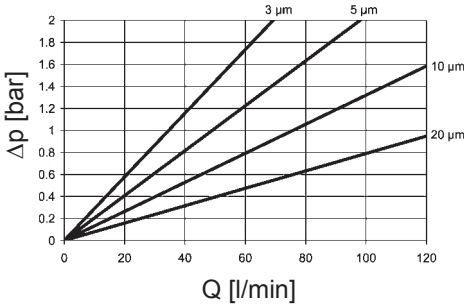

BN4HC: 110

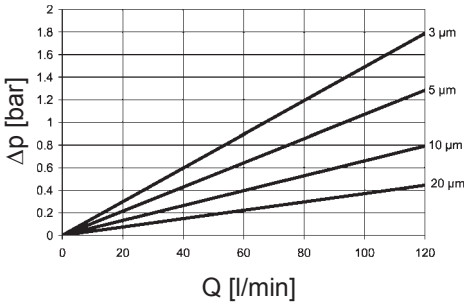

BN4HC: 140

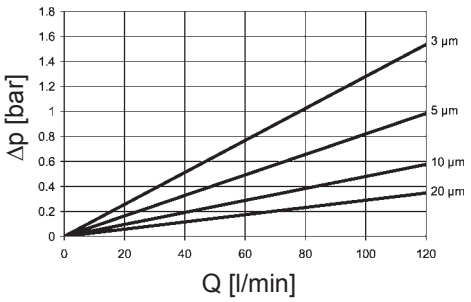

BN4HC: 160

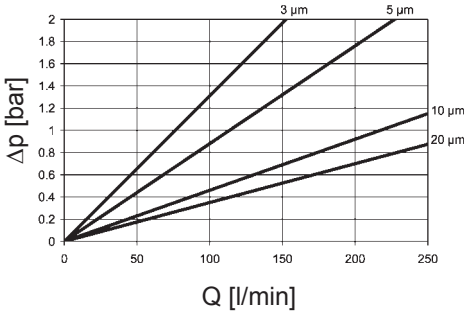

BN4HC: 240

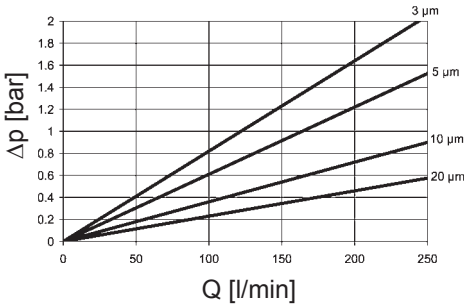

BN4HC: 280

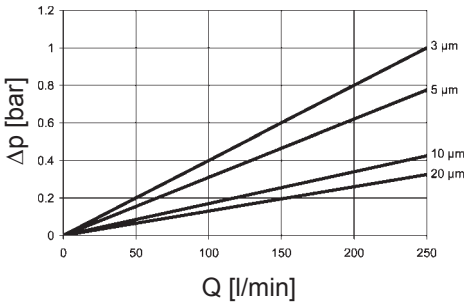

BN4HC: 330

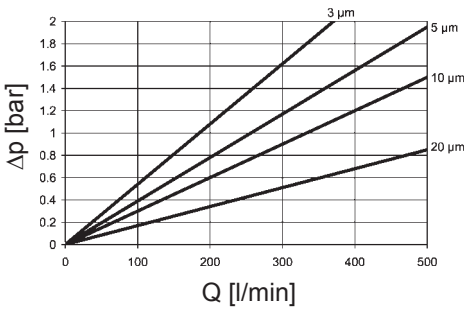

BN4HC: 500

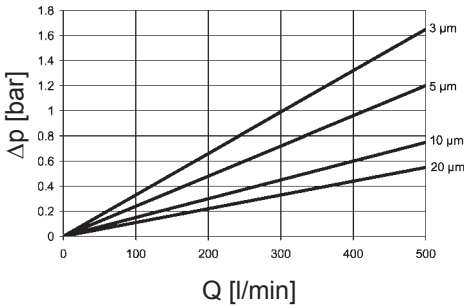

BN4HC: 660

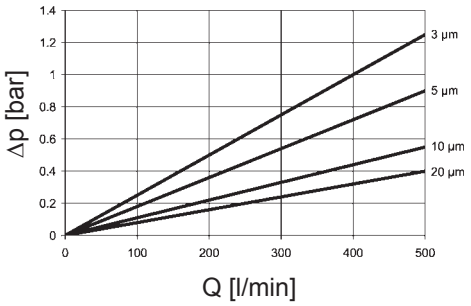

BN4HC: 990

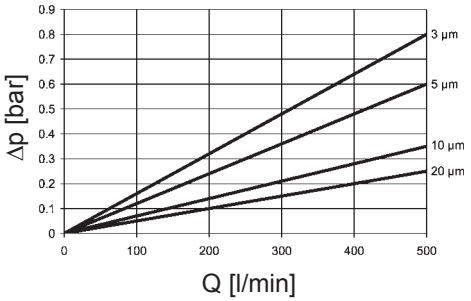

BN4HC: 1320

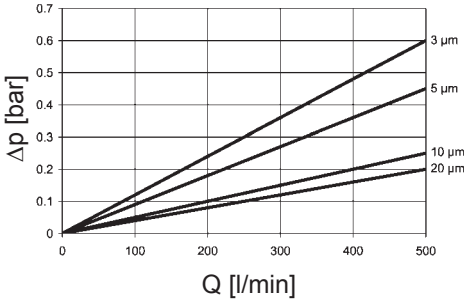

BN4HC: 1500

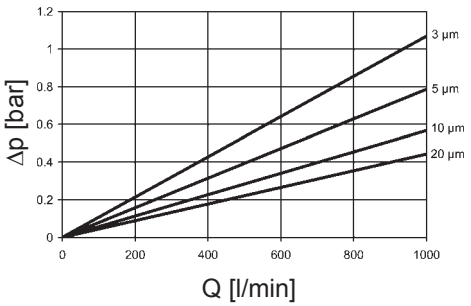

www.comoso.com

4. DIMENSIONS

DF 30, DF/DFF 60 to 1500 (inline filter ports)

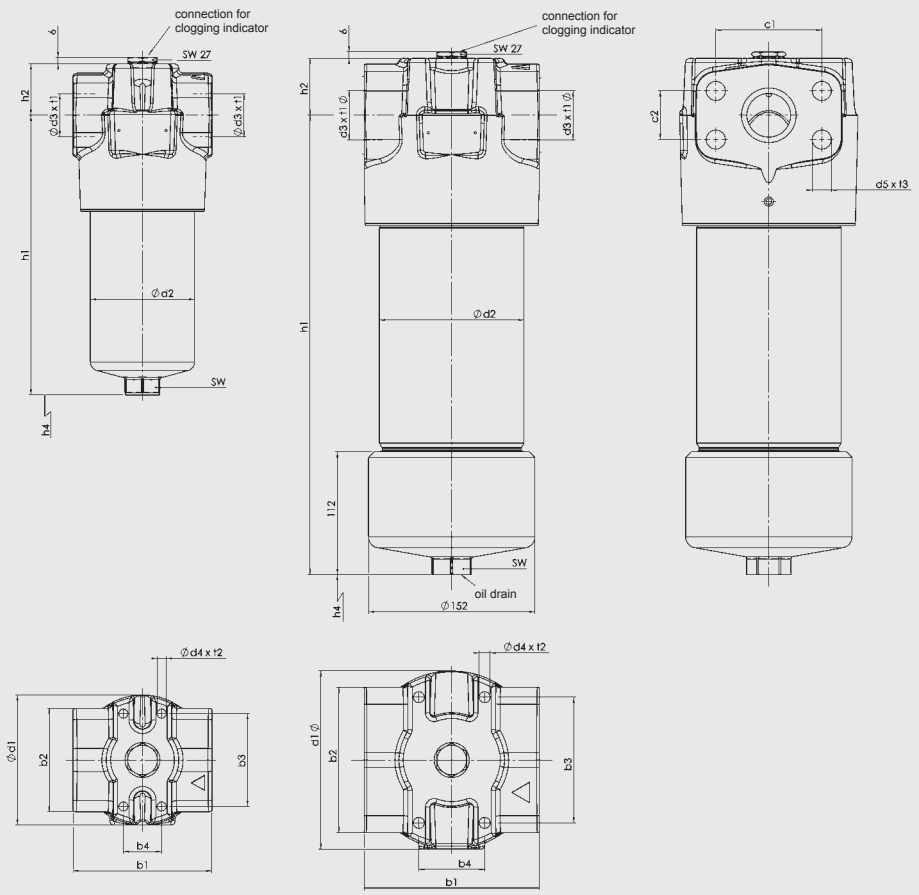

Type	b1	b2	b3	b4	c1	c2	d1	d2	d3	d4	d5	h1	h2	h4	SW	t1	t2	t3	Weight incl. element [kg]	Vol. of pressure chamber [l]
30... B...1.X	68	38	45	30	-	-	69	52	G ½	M5	-	131.5	38	75	24	14	6	-	2.3	0.13
60... C...1.X	90	71	56	32	-	-	86	68	G ¾	M6	-	140	40	85	27	17	9	-	4.5	0.20
60... I...1.X	89	71	56	32	50.8	23.8	86	68	SAE DN 20	M6	M10	140	40	85	27	-	9	15	4.5	0.20
110... C...1.X	90	71	56	32	-	-	86	68	G ¾	M6	-	209.5	40	85	27	17	9	-	5.4	0.33
110... I...1.X	89	71	56	32	50.8	23.8	86	68	SAE DN 20	M6	M10	209.5	40	85	27	-	9	15	5.4	0.33
140... C...1.X	89	71	56	32	-	-	86	68	G ¾	M6	-	250.5	40	85	27	17	9	-	6.0	0.40
140... I...1.X	89	71	56	32	50.8	23.8	86	68	SAE DN 20	M6	M10	250.5	40	85	27	-	9	15	6.0	0.40
160... E...1.X	125	95	85	35	-	-	119	95	G1¼	M10	-	196.5	47	105	32	21	14	-	10.3	0.60
160... J...1.X	125	95	85	35	66.7	31.8	119	95	SAE DN 32	M10	M14	196.5	47	105	32	-	14	19	10.3	0.60
240... E...1.X	125	95	85	35	-	-	119	95	G1¼	M10	-	256	47	105	32	21	14	-	11.8	0.80
240... J...1.X	125	95	85	35	66.7	31.8	119	95	SAE DN 32	M10	M14	256	47	105	32	-	14	19	11.8	0.80
280... E...1.X	125	95	85	35	-	-	119	95	G1¼	M10	-	438	47	105	32	21	14	-	16.3	1.60
280... J...1.X	125	95	85	35	66.7	31.8	119	95	SAE DN 32	M10	M14	438	47	105	32	-	14	19	16.3	1.60
330... F...1.X	160	133	115	60	-	-	163	130	G1½	M12	-	257.5	52	115	36	23	17	-	24.5	1.50
330... L...1.X	160	133	115	60	96.8	44.5	163	130	SAE DN 50	M12	M20	257.5	52	115	36	-	17	25	24.5	1.50
500... F...1.X	160	133	115	60	-	-	163	130	G1½	M12	-	350.5	52	115	36	23	17	-	28.6	2.30
500... L...1.X	160	133	115	60	96.8	44.5	163	130	SAE DN 50	M12	M20	350.5	52	115	36	-	17	25	28.6	2.30
660... F...1.X	160	133	115	60	-	-	163	130	G1½	M12	-	428	52	115	36	23	17	-	31.6	3.00
660... L...1.X	160	133	115	60	96.8	44.5	163	130	SAE DN 50	M12	M20	428	52	115	36	-	17	25	31.6	3.00
330... F...2.X	160	133	115	60	-	-	163	132	G1½	M12	-	254	52	180	36	23	17	-	27.4	1.50
330... L...2.X	160	133	115	60	96.8	44.5	163	132	SAE DN 50	M12	M20	254	52	180	36	-	17	25	27.4	1.50
500... F...2.X	160	133	115	60	-	-	163	132	G1½	M12	-	343	52	270	36	23	17	-	31.5	2.30
500... L...2.X	160	133	115	60	96.8	44.5	163	132	SAE DN 50	M12	M20	343	52	270	36	-	17	25	31.5	2.30
660... F...2.X	160	133	115	60	-	-	163	132	G1½	M12	-	420	52	350	36	23	17	-	34.4	3.00
660... L...2.X	160	133	115	60	96.8	44.5	163	132	SAE DN 50	M12	M20	420	52	350	36	-	17	25	34.4	3.00
990... F...2.X	160	133	115	60	-	-	163	132	G1½	M12	-	576	52	500	36	23	17	-	43.4	4.20
990... L...2.X	160	133	115	60	96.8	44.5	163	132	SAE DN 50	M12	M20	576	52	500	36	-	17	25	43.4	4.20
1320.. F...2.X	160	133	115	60	-	-	163	132	G1½	M12	-	742	52	670	36	23	17	-	51.1	5.60
1320.. L...2.X	160	133	115	60	96.8	44.5	163	132	SAE DN 50	M12	M20	742	52	670	36	-	17	25	51.1	5.60
1500.. G...2.X	196	134	110	54	-	-	176	152	G2	M12	-	822.5	60	700	36	30	22	-	69.3	8.20
1500.. L...2.X	196	134	110	54	96.8	44.5	176	152	SAE DN 50	M12	M20	822.5	60	700	36	-	22	25	69.3	8.20

B, C, E, F, G = thread connection
I, J, L = flange connection to DIN ISO 6162, 6000 psi with metric thread

www.comoso.com

DF/DFF 1500 (filter ports in L configuration)

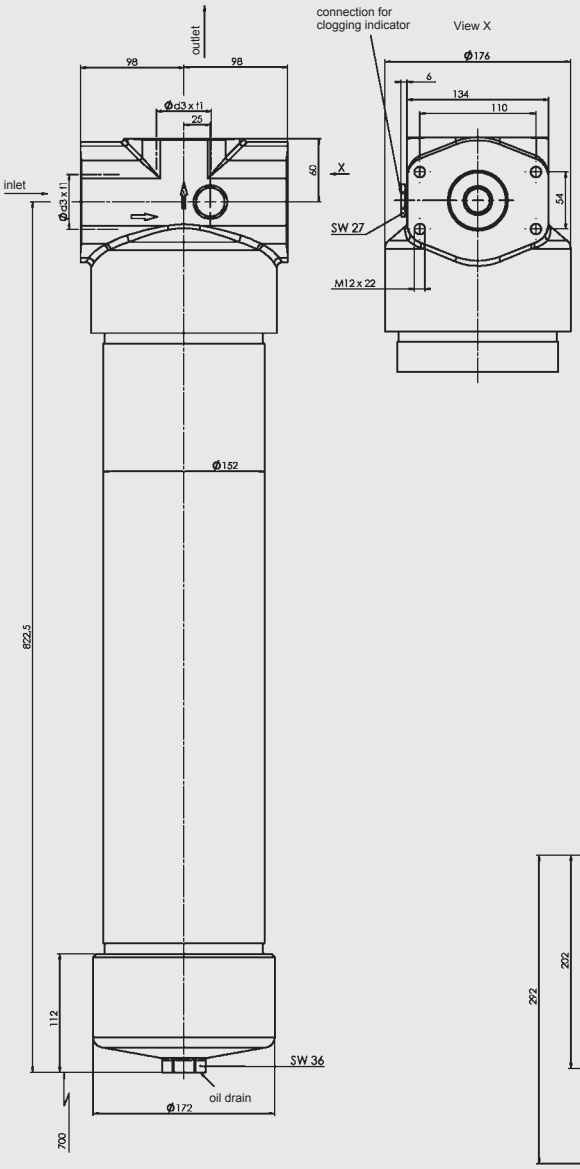

DF 2000, 3000, 4000

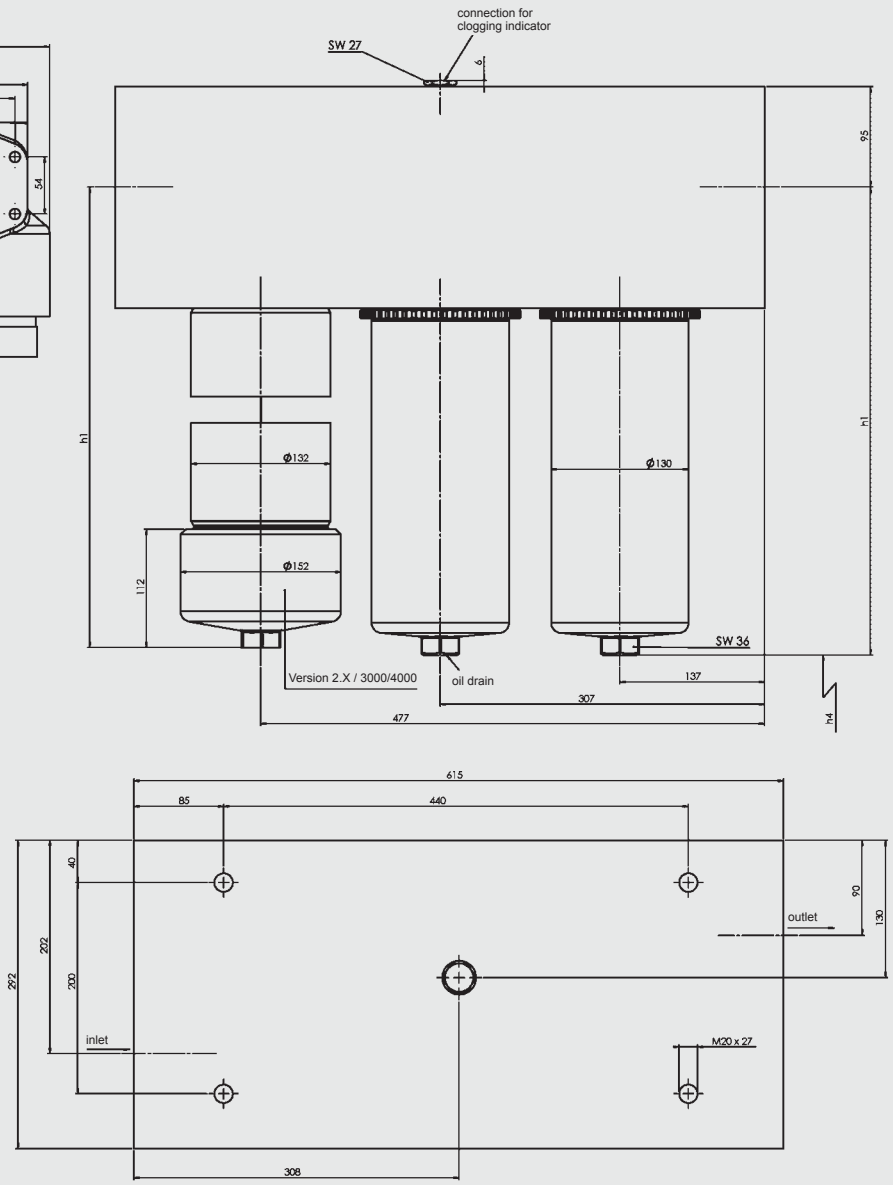

Type	d3	h1	h4	t1	Weight incl. element [kg]	Volume of pressure chamber [l]
1500 .. LG .. 2.X	G2	–	700	30	69.3	8.20
1500 .. LL .. 2.X	SAE DN 50	–	700	–	69.3	8.20
2000 .. N ... 1.X	SAE DN 80	447	95	–	265	14.00
2000 .. N ... 2.X	SAE DN 80	440	350	–	274	14.00
3000 .. N ... 2.X	SAE DN 80	596	500	–	302	17.60
4000 .. N ... 2.X	SAE DN 80	762	670	–	326	21.80

G = thread connection

L, N = flange connection to DIN ISO 6162, 6000 psi with metric thread

www.comoso.com

DF 330 to 1320...3.X (element top-removable)

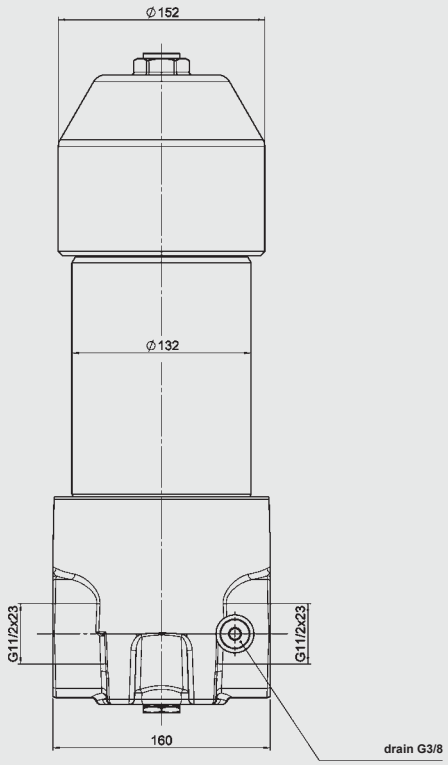

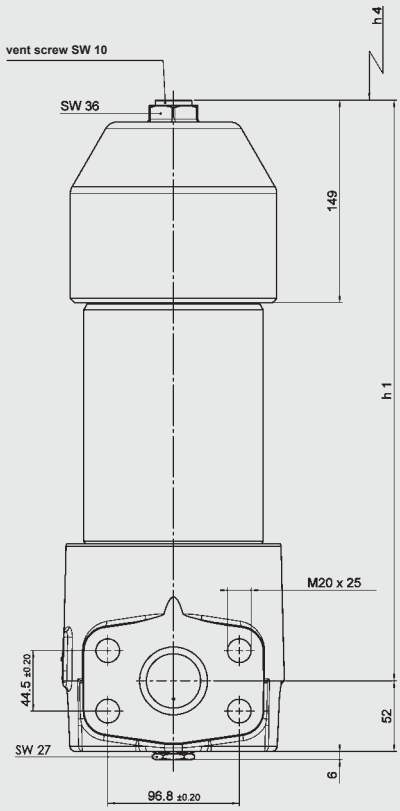

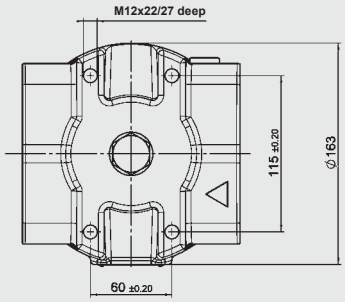

Type	h1	h4	Weight incl. element [kg]	Volume of pressure chamber [l]
330...F..3.X	263	80	27.9	1.50
330...L..3.X	263	80	27.9	1.50
500...F..3.X	351	170	31.8	2.30
500...L..3.X	351	170	31.8	2.30
660...F..3.X	428	250	33.9	3.00
660...L..3.X	428	250	33.9	3.00
990...F..3.X	583	400	43.1	4.20
990...L..3.X	583	400	43.1	4.20
1320...F..3.X	749	570	50.8	5.60
1320...L..3.X	749	570	50.8	5.60

F = thread connection

L = flange connection to DIN ISO 6162, 6000 psi with metric thread

www.comoso.com

DFFX 330 to 1320 (Δp-optimized; filter ports in L configuration)

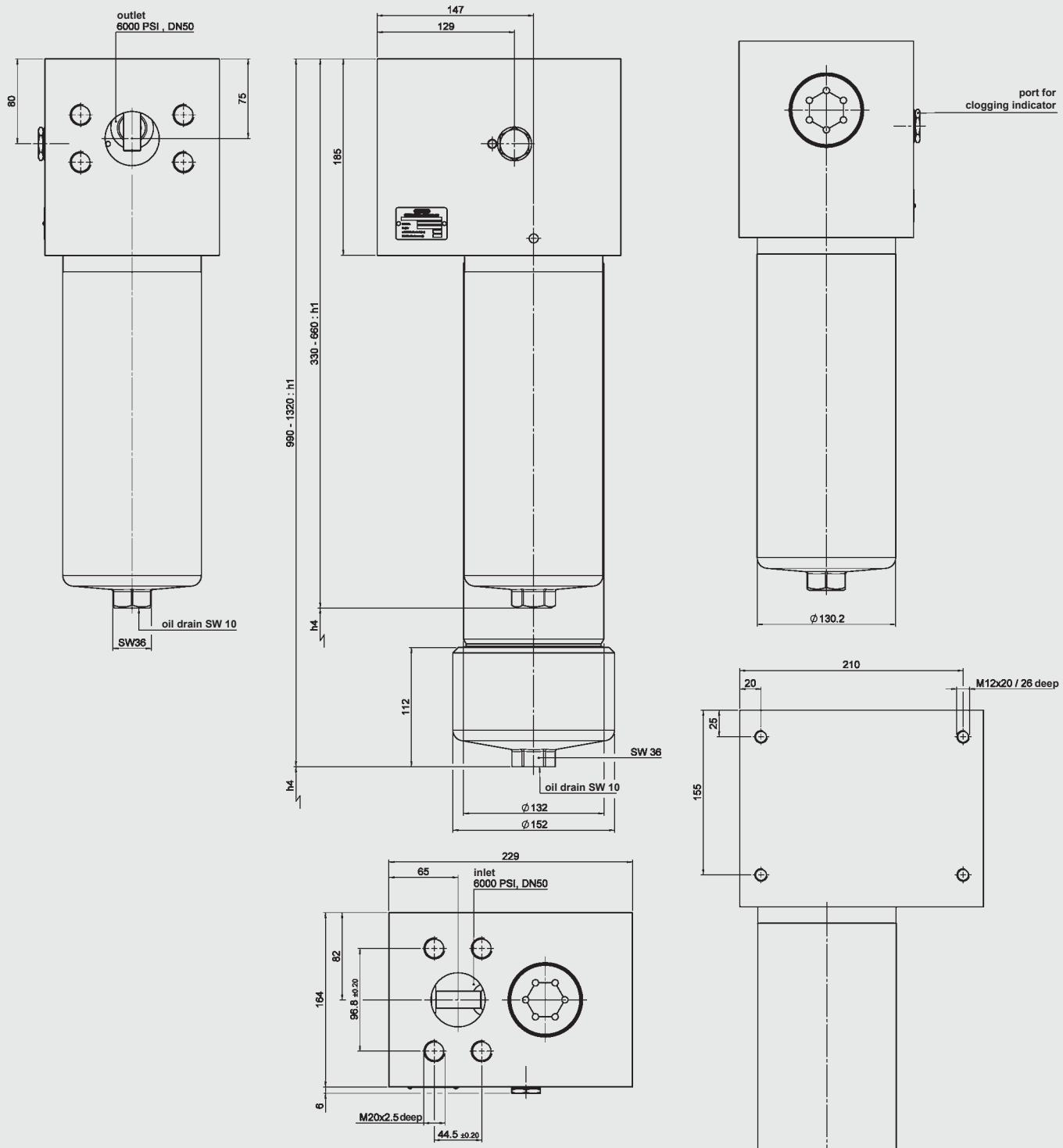

Type	h1	h4	Weight incl. element [kg]	Volume of pressure chamber [l]
330...L..1.X	346.5	115	49.5	1.50
500...L..1.X	439.5	115	53.6	2.30
660...L..1.X	517	115	56.6	3.00
990...L..2.X	665	500	68.4	4.20
1320..L..2.X	831	670	76.1	5.60

L = flange connection to DIN ISO 6162,
6000 psi with metric thread

NOTE

The information in this brochure relates to the operating conditions and applications described.
For applications or operating conditions not described, please contact the relevant technical department.
Subject to technical modifications.

HYDAC FILTERTECHNIK GMBH
Industriegebiet
D-66280 Sulzbach/Saar
Tel.: 0 68 97 / 509-01
Fax: 0 68 97 / 509-300
Internet: www.hydac.com
E-Mail: filter@hydac.com

www.comoso.com