EDS 3100 Series

Absolute Pressure Electronic Switch

Applications

Description

The EDS 3100 is a compact electronic pressure switch with digital display for absolute pressure measurement in the low pressure range. It has a ceramic measuring cell with thick-film strain gauges. The unit can have one or two switching outputs, and there is the option of an additional analog output signal (4 to 20 mA or 0 to 10 V).

A special feature of the EDS 3100 is that the display can be moved in 2 planes. The unit can be installed in almost any mounting position and the display can be turned to the optimum position without the additional expense of a mechanical adapter. The 4-digit digital display can indicate the pressure in bar, psi or MPa. The user can choose between the individual measurement units.

When changing to a different measurement unit, the EDS 3100 automatically converts all the switching settings to the new unit of measurement. In addition, the EDS 3100 is also available in a DESINA® version.

The main applications of the EDS 3100 are primarily in hydraulics, pneumatics and in refrigeration and air conditioning technology.

Special Features

- 1 or 2 PNP transistor switching outputs, up to 1.2 A load per output
- Accuracy ≤ ±0.5% BFSL
- Optional analog output selectable (4 to 20 mA / 0 to 10 V)
- 4-digit digital display
- Optimum alignment - can be rotated in two planes (axes)
- Measured value can be displayed in bar, psi or MPa
- User-friendly due to key programming
- Set point and reset point can be adjusted independently
- Many useful additional functions
- Option of Desina® version with diagnostic function

Approvals

CE mark is a mandatory conformity mark on many products placed on the single market in the European Economic Area

Technical Details

Sensor Specifications	
Measuring ranges - psi	15, 50
Overload pressure - psi	45, 150
Burst pressure - psi	70, 250
Mechanical connection	G1/4A DIN 3852 male *(standard for bar ranges only)* 1/4"-18 NPT male *(standard for psi ranges only)*
Tightening torque	G1/4: 15 lb-ft (20 Nm) 1/4" NPT: 30 lb-ft (40 Nm)
Parts in contact with media	Stainless steel, ceramic, FPM seal
Accuracy (B.F.S.L.) including linearity, hysteresis, and repeatability	≤ ±0.5% BFSL
Temperature compensation zero point	≤ ±0.0085%/°F typ. ≤ ±0.017%/°F max.
Temperature compensation over range	≤ ±0.0085%/°F typ. ≤ ±0.017%/°F max.
Long-term drift	≤ ±0.3% FS typ. / year
Life expectancy	10 million load cycles (0 to 100% FS)
Weight	Approximately 120 g
Output signal	4 to 20 mA, R_{Lmax} = 500 Ω 0 to 10 VDC, R_{Lmin} = 1 kΩ
Switching Specifications	
Type	PNP transistor output
Repeatability	≤ ±0.25% FS max.
Switching current	Max. 1.2 A per switching output
Switching cycles	≥ 100 million
Reaction time	< 10 ms
Environmental Conditions	
Compensated temperature range	14° to 158°F (-10° to 70°C) 14° to 140°F (-10 to 60°C) with UL rating
Operating temperature range	-13° to 176°F (-25° to 80°C) -13° to 140°F (-25° to 60°C) with UL rating
Storage temperature range	-40° to 176°F (-40° to 80°C)
Media temperature range	-13° to 176°F (-25° to 80°C)
CE mark	EN 61000-6-1 / 2 / 3 / 4
c UL us mark *(Environmental conditions to 1.4.2 UL 61010-1; C22.2 No. 61010-1)*	Certificate no. E318391
Vibration resistance to DIN EN 60068-2-6 at 10 to 500 Hz	≤ 10g
Environmental protection	IP 67 *(molded M12x1 connector is used)*
Electrical Specifications	
Supply voltage -limited energy- *according to:*	9 to 35 VDC without analog output 18 to 35 VDC with analog output *9.3 UL 61010; Class 2; UL 1310/1585; LPS UL 60950*
Residual ripple suppy voltage	≤ 5%
Current consumption	max. 2.455 A total max. 35 mA with inactive switching outputs max. 55 mA with analog output and inactive switching outputs
Reverse polarity protection of the supply voltage, excess voltage, override and short circuit protection	Standard

Model Code

EDS 3 1 X X - X - XXXX - 400 - X1

Mechanical Connection*
- 4 = G1/4A DIN 3852 male *(bar ranges only)*
- 8 = 1/4"-18 NPT *(psi ranges only)*

Electrical Connection*
- 6 = M12x1 plug, 4 pole *(connector not included)*
- 8 = M12x1 plug, 5 pole *(connector not included)*

Output
- 1 = 1 Switching Output *(only with electrical connection 6)*
- 2 = 2 Switching Outputs *(only with electrical connection 6)*
- 3 = 1 Switching Output with 1 analog output *(only with electrical connection 6)*
- 5 = 2 Switching Outputs with 1 analog output *(only with electrical connection 8)*

Pressure Range
For EDS 318X only *(1/4"-18 NPT)*
0015, 0050 psi

Modification Number
400 = Standard in psi

Seal Material
- F1 = FPM Seal *(hydraulic oil)*
- E1 = EPDM Seal *(coolant, ammonia, water)*

**Other options available upon request*

Pin Connections

M12x1, 4 pole

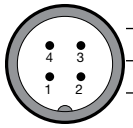

Pin	31X6-1	31X6-2	31X6-3
1	$+U_B$	$+U_B$	$+U_B$
2	nc	SP 2	analog
3	0 V	0 V	0 V
4	SP 1	SP 1	SP 1

M12x1, 5 pole

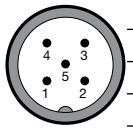

Pin	31X8-5
1	$+U_B$
2	analog
3	0 V
4	SP 1
5	SP 2

Circuit Diagram

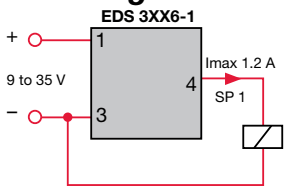

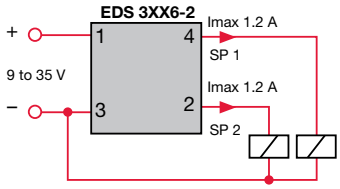

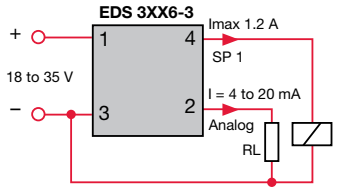

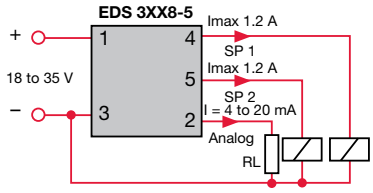

Dimensions

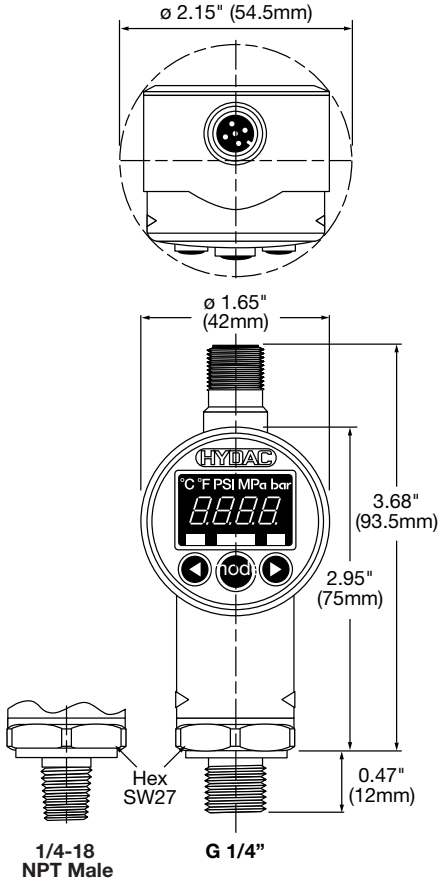

EDS 3300 Series

Low Pressure Electronic Switch

Applications

Description

The EDS 3300 is a compact electronic pressure switch with digital display for measuring relative pressure in the low pressure range. It has a ceramic measuring cell with thick-film strain gauges. The unit can have one or two switching outputs, and there is the option of an additional analog output signal *(4 to 20 mA or 0 to 10 V selectable)*.

A special feature of the EDS 3300 is that the display can be moved in 2 planes. The unit can be installed in almost any mounting position and the display can be turned to the optimum position without the additional expense of a mechanical adapter.

The 4-digit digital display can indicate the pressure in bar, psi or MPa. The user can choose among the individual measurement units. When changing to a different measurement unit, the EDS 3300 automatically converts all the switching settings to the new unit of measurement.

In addition, the EDS 3300 is also available in a DESINA® version. The main applications of the EDS 3300 are primarily in hydraulics, pneumatics and in refrigeration and air conditioning technology.

Special Features

- 1 or 2 PNP transistor switching outputs, up to 1.2 A load per output
- Accuracy ≤ ±0.5% BFSL
- Optional analogue output selectable (4 to 20 mA / 0 to 10 V)
- 4-digit digital display
- Optimum alignment - can be rotated in two planes (axes)
- Measured value can be displayed in bar, psi or MPa
- User-friendly due to key programming
- Switching points and switch-back hystereses can be adjusted independently
- Many useful additional functions

Approvals

CE mark is a mandatory conformity mark on many products placed on the single market in the European Economic Area

Technical Details

Sensor Specifications	
Measuring ranges - psi	-14.5 to 75, 15, 30, 50, 150, 250, 500
Overload pressure - psi	290, 45, 100, 150, 450, 725, 1500
Burst pressure - psi	400, 70, 150, 250, 650, 1000, 2500
Mechanical connection	G1/4A DIN 3852 male *(standard for bar ranges only)* 1/4"-18 NPT male *(standard for psi ranges only)*
Tightening torque	G1/4: 15 lb-ft (20 Nm) 1/4" NPT: 30 lb-ft (40 Nm)
Parts in contact with media	Stainless steel, ceramic, FPM seal
Accuracy (B.F.S.L.) including linearity, hysteresis, and repeatability	≤ ±0.5% BFSL
Temperature compensation zero point	≤ ±0.0085% / °F typ. ≤ ±0.017% / °F max.
Temperature compensation over range	≤ ± 0.0085% / °F typ. ≤ ±0.017% / °F max.
Long-term drift	≤ ± 0.3% FS typ. / year
Life expectancy	10 million load cycles (0 to 100% FS)
Weight	Approximately 120 g
Output signal	4 to 20 mA, $R_{L\,max}$ = 500 Ω 0 to 10 VDC, $R_{L\,min}$ = 1 kΩ
Switching Specifications	
Type	PNP transistor output
Repeatability	≤ ±0.25% FS max.
Switching current	Max. 1.2 A per switching output
Switching cycles	≥ 100 million
Reaction time	< 10 ms
Environmental Condition	
Compensated temperature range	14° to 158°F (-10° to 70°C) 14° to 140°F (-10 to 60°C) with UL rating
Operating temperature range	-13° to 176°F (-25° to 80°C) -13° to 140°F (-25° to 60°C) with UL rating
Storage temperature range	-40° to 176°F (-40° to 80°C)
Media temperature range	-13° to 176°F (-25° to 80°C)
CE mark	EN 61000-6-1 / 2 / 3 / 4
c UL us mark *(Environmental conditions to 1.4.2 UL 61010-1; C22.2 No. 61010-1)*	Certificate no. E318391
Vibration resistance to DIN EN 60068-2-6 at 10 to 500 Hz	≤ 10g
Environmental protection	IP 67 *(molded M12x1 connector is used)*
Electrical Specifications	
Supply voltage -limited energy- *according to:*	9 to 35 VDC without analog output 18 to 35 VDC with analog output *9.3 UL 61010; Class 2; UL 1310/1585; LPS UL 60950*
Residual ripple suppy voltage	≤ 5%
Current consumption	max. 2.455 A total max. 35 mA with inactive switching outputs max. 55 mA with analog output and inactive switching outputs
Reverse polarity protection of the supply voltage, excess voltage, override and short circuit protection	Standard

Model Code

EDS 3 3 X X - X - XXXX - 400 - X1

Mechanical Connection*
- 4 = G1/4A DIN 3852 male *(bar ranges only)*
- 8 = 1/4"-18 NPT *(psi ranges only)*

Electrical Connection*
- 6 = M12x1 plug, 4 pole *(connector not included)*
- 8 = M12x1 plug, 5 pole *(connector not included)*

Output
- 1 = 1 Switching Output *(only with electrical connection 6)*
- 2 = 2 Switching Outputs *(only with electrical connection 6)*
- 3 = 1 Switching Output with 1 analog output *(only with electrical connection 6)*
- 5 = 2 Switching Outputs with 1 analog output *(only with electrical connection 8)*

Pressure Range
For EDS 338X only *(1/4"-18 NPT)*
0089 (-14.5 to 75), 0015, 0030, 0050, 0150, 0250, 0500 psi

Modification Number
400 = Standard in psi

Seal Material
- F1 = FPM Seal *(hydraulic oil)*
- E1 = EPDM Seal *(coolant, ammonia, water)*

**Other options available upon request*

Pin Connections

M12x1, 4 pole

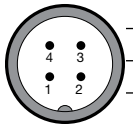

Pin	33X6-1	33X6-2	33X6-3
1	$+U_B$	$+U_B$	$+U_B$
2	nc	SP 2	analog
3	0 V	0 V	0 V
4	SP 1	SP 1	SP 1

M12x1, 5 pole

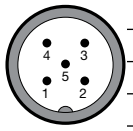

Pin	33X8-5
1	$+U_B$
2	analog
3	0 V
4	SP 1
5	SP 2

Circuit Diagram

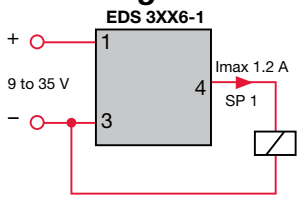

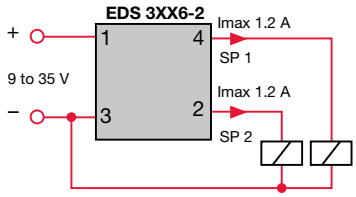

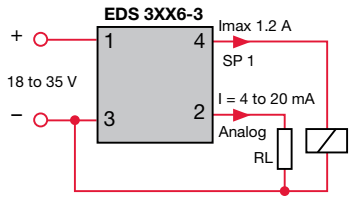

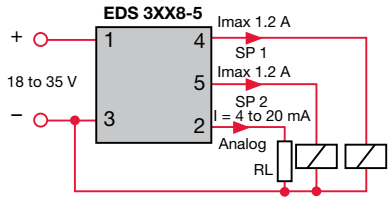

Dimensions

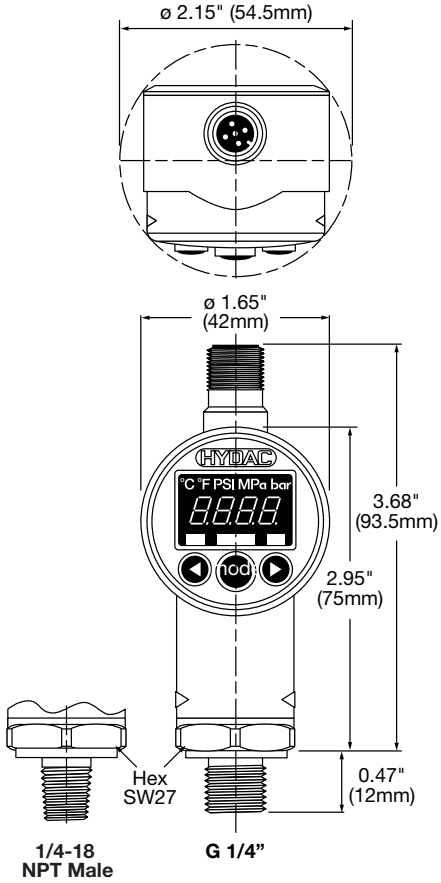

EDS 3400 Series

High Pressure Electronic Switch

Applications

Description

The EDS 3400 is a compact, electronic pressure switch with an integral digital display for measuring relative pressure in the high pressure range.

The unit has a stainless steel measurement cell with thin-film strain gauges. The unit can have one or two switching outputs and there is the option of an additional analog output signal *(4 to 20 mA or 0 to 10 V selectable)*.

A special design feature of the EDS 3400 is that the display can be moved in two planes. The unit can be installed in almost any mounting position and the display can be turned to the optimum position without the usual additional expense of a mechanical adapter. The 4-digit digital display can indicate the pressure in bar, psi or MPa. The user can select the particular measurement unit. When changing to a different unit of measurement, the EDS 3400 converts all the switching settings to the new measurement unit. In addition the EDS 3400 is also available in a DESINA® version.

The main applications of the EDS 3400 are primarily in hydraulics, pneumatics and in refrigeration & air conditioning technology.

Special Features

- 1 or 2 PNP transistor switching outputs, up to 1.2 A load per output
- Accuracy ≤ ±0.5% BFSL
- Optional analog output selectable *(4 to 20 mA / 0 to 10 V)*
- 4-digit digital display
- Optimum alignment - can be rotated in two planes *(axes)*
- Measured value can be displayed in bar, psi or MPa
- User-friendly due to key programming
- Switching points and switch-back hystereses can be adjusted independently
- Many useful additional functions
- Option of Desina® version with diagnostic function

Approvals

CE mark is a mandatory conformity mark on many products placed on the single market in the European Economic Area

Technical Details

Sensor Specifications	
Measuring ranges - psi	1000, 3000, 6000, 9000
Overload pressure - psi	2900, 7250, 11600, 11600
Burst pressure - psi	7250, 14500, 29000, 29000
Mechanical connection	G1/4A DIN 3852 male *(standard for bar ranges only)* SAE 6 9/16-18 UNF 2A *(standard for psi ranges only)*
Tightening torque	15 lb-ft (20 Nm)
Parts in contact with media	Stainless steel, FPM seal
Accuracy (B.F.S.L.) including linearity, hysteresis, and repeatability	≤ ±0.5% BFSL
Temperature compensation zero point	≤ ±0.0085% / °F typ. ≤ ±0.017% / °F max.
Temperature compensation over range	≤ ± 0.0085% / °F typ. ≤ ±0.017% / °F max.
Long-term drift	≤ ± 0.3% FS typ. / year
Life expectancy	10 million load cycles (0 to 100% FS)
Weight	Approximately 120 g
Output signal	4 to 20 mA, $R_{L\,max}$ = 500 Ω 0 to 10 VDC, $R_{L\,min}$ = 1 kΩ
Switching Specifications	
Type	PNP transistor output
Repeatability	≤ ±0.25% FS max.
Switching current	Max. 1.2 A per switching output
Switching cycles	≥ 100 million
Reaction time	< 10 ms
Environmental Condition	
Compensated temperature range	14° to 158°F (-10° to 70°C) 14° to 140°F (-10 to 60°C) with UL rating
Operating temperature range	-13° to 176°F (-25° to 80°C) -13° to 140°F (-25° to 60°C) with UL rating
Storage temperature range	-40° to 176°F (-40° to 80°C)
Media temperature range	-13° to 176°F (-25° to 80°C)
CE mark	EN 61000-6-1 / 2 / 3 / 4
c UL us mark *(Environmental conditions to 1.4.2 UL 61010-1; C22.2 No. 61010-1)*	Certificate no. E318391
Vibration resistance to DIN EN 60068-2-6 at 10 to 500 Hz	≤ 10g
Environmental protection	IP 67 *(molded M12x1 connector is used)*
Electrical Specifications	
Supply voltage -limited energy- *according to:*	9 to 35 VDC without analog output 18 to 35 VDC with analog output *9.3 UL 61010; Class 2; UL 1310/1585; LPS UL 60950*
Residual ripple suppy voltage	≤ 5%
Current consumption	max. 2.455 A total max. 35 mA with inactive switching outputs max. 55 mA with analog output and inactive switching outputs
Reverse polarity protection of the supply voltage, excess voltage, override and short circuit protection	Standard

Model Code

EDS 3 4 X X - X - XXXX - 400

Mechanical Connection*
- 4 = G1/4A DIN 3852 male *(bar ranges only)*
- 7 = SAE 6 9/16-18 UNF 2A *(psi ranges only)*

Electrical Connection*
- 6 = M12x1 plug, 4 pole *(connector not included)*
- 8 = M12x1 plug, 5 pole *(connector not included)*

Output
- 1 = 1 Switching Output *(only with electrical connection 6)*
- 2 = 2 Switching Outputs *(only with electrical connection 6)*
- 3 = 1 Switching Output with 1 analog output *(only with electrical connection 6)*
- 5 = 2 Switching Outputs with 1 analog output *(only with electrical connection 8)*

Pressure Range
For EDS 347X only *(SAE 6 9/16-18 UNF2A)*
1000, 3000, 6000, 9000 psi

Modification Number
400 = Standard in psi

**Other options available upon request*

Pin Connections

M12x1, 4 pole

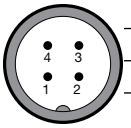

Pin	34X6-1	34X6-2	34X6-3
1	$+U_B$	$+U_B$	$+U_B$
2	nc	SP 2	analog
3	0 V	0 V	0 V
4	SP 1	SP 1	SP 1

M12x1, 5 pole

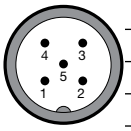

Pin	34X8-5
1	$+U_B$
2	analog
3	0 V
4	SP 1
5	SP 2

Circuit Diagram

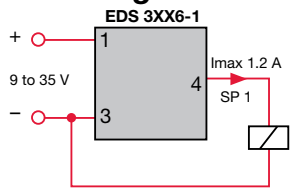

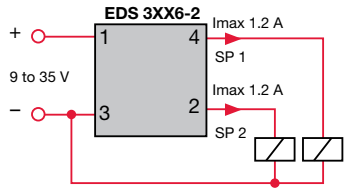

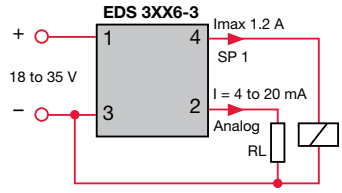

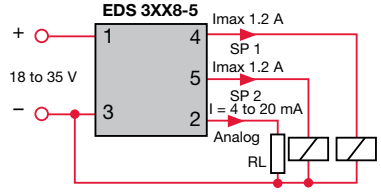

Dimensions

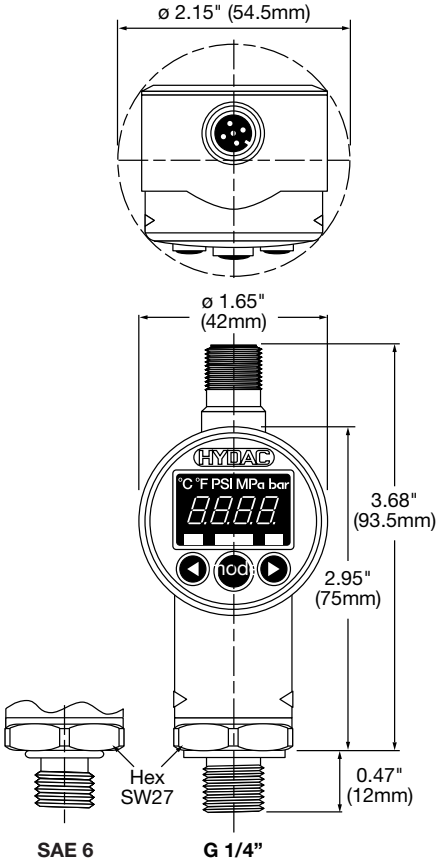

EDS 8000 Series

Electronic Pressure Switch

Applications

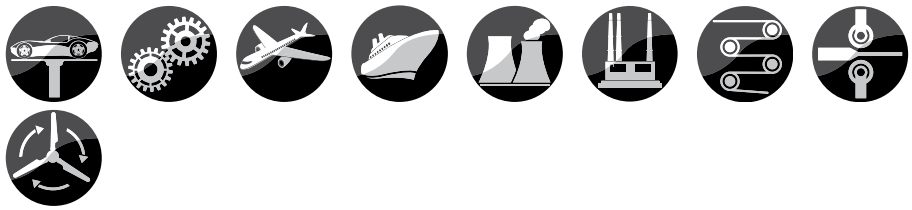

Description

EDS 8000 is a compact, easy to program electronic pressure switch. It is available with two PNP transistor switching outputs.

All settings of the EDS 8000 are programmable via two buttons and a four digit digital display. The switch position is indicated by a red or green backlight LED of the display.

The unit has many additional adjustment parameters, e.g. switching delay times, N/O / N/C function of the outputs, display in PSI, bar and MPa. EDS 8000 is available with pressure ranges from 0-500 up to 0-9000 psi.

The main applications of EDS 8000 are pressure indications in hydraulics and pneumatics; wherever constant switching activities and accuracy are highly in demand.

Additional functions

- Switching mode of the outputs is selectable *(set point function or window function)*
- Switch direction of the outputs selectable (N/C or N/O)
- Set and reset delay adjustable from 0.00 to 99.99 seconds
- Stabilized display during pressure pulsation
- Pressure can be displayed in bar, psi, MPa

Features

- Menu navigation according to VDMA
- 2 PNP transistor outputs
- Rugged stainless steel membrane
- Accuracy class ≤ ±0.5% BFSL
- 4-digit digital display
- Multi-color switch display
- Protection class IP 67
- User-friendly
- Many useful additional functions

Approvals

CE mark is a mandatory conformity mark on many products placed on the single market in the European Economic Area

Technical Details

Input Data	
Measuring ranges - psi	500, 1000, 3000, 6000, 9000 psi
Overload pressure - psi	1160, 2900, 7250, 11600, 14500 psi
Burst pressure - psi	2900, 7250, 14500, 29000, 29000 psi
Mechanical connection	G1/4A DIN 3852 male *(bar ranges only)* SAE 6 9/16-18 UNF 2A *(psi ranges only)*
Torque value	15 lb-ft (20 Nm)
Parts in contact with fluid	Stainless steel, FPM seal
Output Data	
Display accuracy to DIN 16086	≤ ±0.5% BFSL ≤ ± 1 % FS max.
Repeatability	≤ ± 0.5 % FS max.
Temperature error	≤ ± 0.017% FS / °F max. zero point ≤ ± 0.017% FS / °F max. range
Long-term stability	≤ ±0.25% FS max. / year
Switching Outputs	
Type	2 PNP transistor outputs
Switching current	max. 250 mA per switching output
Switching cycles	> 100 million
Reaction time	< 10 ms
Environmental Conditions	
Compensated temperature range	-13° to 185°F (-25 to 85°C)
Operating temperature range	-13° to 212°F (-25 to 100°C)
Storage temperature range	-40° to 185°F (-40 to 85°C)
Fluid temperature range	-13° to 257°F (-25 to 125 °C)
Nominal temperature range of display *(read-out)*	5 to 158°F (-15 to 70°C)
CE mark	EN 61000-6-1 / 2 / 3 / 4
c UL us mark *(Environmental conditions to 1.4.2 UL 61010-1; C22.2 No. 61010-1)*	Certificate no. E318391
Vibration resistance to DIN EN 60068-2-6 at 0 to 500 Hz	approx. 10 g
Shock resistance to DIN EN 60068-2-29 (11 ms)	approx. 50 g
Protection class to DIN 40050	IP 67 *(when an IP 67 connector is used)*
Other Data	
Supply voltage -limited energy- *according to:*	9 to 32 VDC without analog output *9.3 UL 61010; Class 2; UL 1310/1585; LPS UL 60950*
Current consumption	max. 0.535 A total max. 35 mA with inactive switching outputs
Display	4-digit, LED, 7-segment, height of digits 4.5 mm
Life expectancy	> 10 million cycles (0 to 100 %)
Weight	approx. 70 g
Reverse polarity protection of the supply voltage, excess voltage, override and short circuit protection	Standard

Model Code

EDS 8 4 X 6 - X - XXXX - 400

Mechanical Connection
4 = G1/4 A DIN 3852 *(outside) (bar ranges only)*
7 = SAE 6 9/16-18 UNF 2A *(psi ranges only)*

Electrical Connection
6 = Connector male M12x1 -4 pole *(without female connector)*

Output
2 = 2 switch outputs

Pressure Range
0500, 1000, 3000, 6000, 9000 psi *(for mechanical connection 7 = SAE 6)*

Modification Number
400 = Standard *(psi)*

Accessories:
Appropriate accessories, such as electrical connectors, mechanical connection adaptors, etc. can be found in the Accessories section.

Pin Connections

M12x1

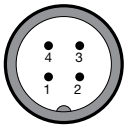

Pin	
1	+U
2	SP 2
3	0V
4	SP 1

Setting Options

All terms and symbols used for setting of EDS 8000 as well as menu structure correspond with the specifications in the VDMA regulations (VDMA 24574-1) for pressure switches. EDS 8000 is easy and comfortable to set by two keys.

Switch Output Setting Ranges

Measuring range (psi)	Lower limit of RP / FL (psi)	Upper limit of SP / FH (psi)	Min. diff. between RP & SP or FL & FH	Increment* (psi)
0 to 500	5	500	5	1
0 to 1000	10	1000	10	2
0 to 3000	30	3000	30	5
0 to 6000	60	6000	60	10
0 to 9000	90	9000	90	20

**All ranges given in the table can be adjusted by the increments shown.*

SP = Set point
RP = Re-set point
FL = Pressure window lower value
FH = Pressure window upper value

Dimensions

M12x1

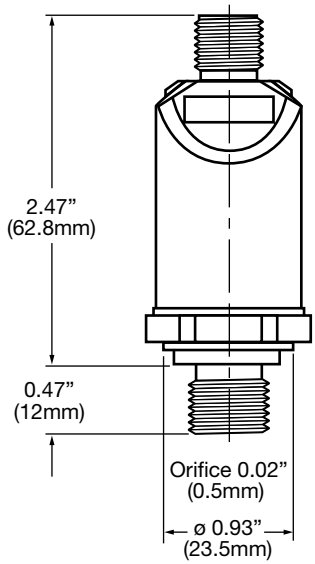

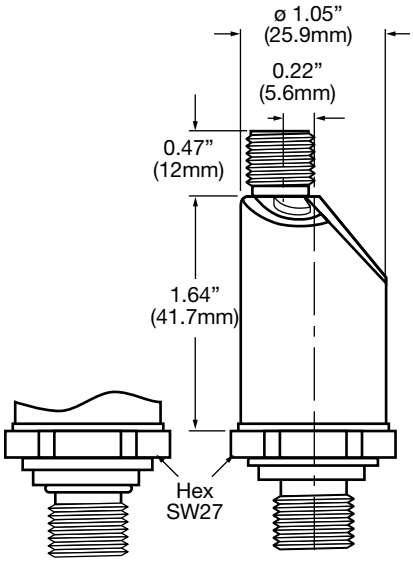

9/16-18UNF2A **G 1/4 A**

EDS 300 Series
Pressure Switch with Display

Applications

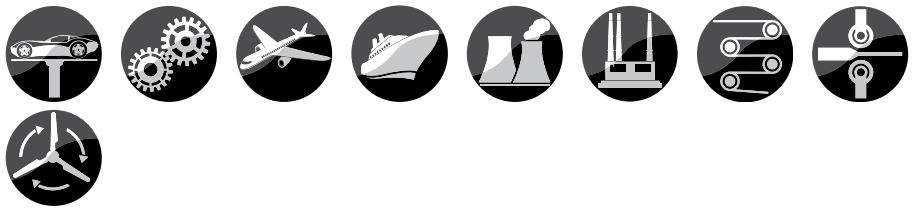

Description

The EDS 300 is a compact electronic pressure switch with digital display. Four different output models are available: with one switching point, with two switching points and both models can also have an additional analog output signal 4 to 20 mA.

The switching points and the corresponding hystereses can be adjusted via keys. For optimum adaptation to a particular application, the unit has many additional adjustment parameters, e.g. switching delay times, N/O / N/C function of the outputs.

The main applications of the EDS 300 are pressure and limit indication in hydraulics and pneumatics and anywhere where a high switching frequency or a constant switching accuracy places too high a demand on a mechanical pressure switch.

The unit is ideal for the construction of accumulator charging circuits or pump and compressor controls.

Special Features

- Integrated pressure sensor with thin-film strain gauge on stainless steel membrane
- Compact, robust construction
- Accuracy ≤ ±0.5% BFSL
- 3 or 4 digit digital display
- User-friendly push button programming
- Switching points and switchback hystereses can be adjusted independently
- Window function
- Many useful additional functions

Approvals

CE mark is a mandatory conformity mark on many products placed on the single market in the European Economic Area

Technical Details

Sensor Specifications	
Measuring ranges - psi	-14.5 to 75, 150, 1000, 3000, 6000, 9000
Overload pressure - psi	290, 290, 2900, 7250, 11600, 14500
Burst pressure - psi	1450, 1450, 7250, 14500, 29000, 29000
Mechanical connection	G1/4A DIN 3852 male *(bar ranges only)* SAE 4 7/16-20 UNF 2B, female *(psi ranges only)*
Tightening torque	G1/4: 15 lb-ft (20 Nm) SAE 4: 11 lb-ft (15 Nm)
Parts in contact with media	Stainless steel
Accuracy (B.F.S.L.) including linearity, hysteresis, and repeatability	≤ ±0.5% BFSL
Temperature compensation zero point	≤ ±0.0085% / °F typ. ≤ ±0.017% / °F max.
Temperature compensation over range	≤ ±0.0085% / °F typ. ≤ ±0.017% / °F max.
Long-term drift	≤ ±0.3% FS typ. / year
Life expectancy	10 million load cycles (0 to 100% FS)
Weight	Approximately 300 g
Output signal	4 to 20 mA, ohmic resistance ≤ 400 Ω
Switching Specifications	
Type	PNP transistor output
Repeatability	≤ ±0.5% FS max.
Switching current	Max. 1.2 A per switching output
Switching cycles	≥ 100 million
Reaction time	< 10 ms
Environmental Condition	
Compensated temperature range	14° to 158°F (-10° to 70°C)
Operating temperature range	-13° to 176°F (-25° to 80°C)
Storage temperature range	-40° to 176°F (-40° to 80°C)
Media temperature range	-13° to 176°F (-25° to 80°C)
CE mark	EN 61000-6-1 / 2 / 3 / 4
Vibration resistance to DIN EN 60068-2-6 at 10 to 500 Hz	≤ 10g
Environmental protection	IP 65
Electrical Specifications	
Supply voltage	20 to 32 VDC
Residual ripple suppy voltage	≤ 5%
Current consumption	100 mA *(plus switching current)*
Reverse polarity protection of the supply voltage, excess voltage, override and short circuit protection	Standard
Display	4-digit, 7-segment LED red

Model Code

EDS 3 X X - X - XXXX - 400

Mechanical Connection*
- 4 = G1/4A DIN 3852 male *(bar ranges only)*
- 5 = SAE 4 7/16-20 UNF 2B, female *(psi ranges only)*

Electrical Connection*
- 4 = 4 pole plug M18x1, Binder Series *(connector not included)*
- 5 = DIN 43650 / ISO plug, 3 pole + ground *(connector ZBE 01 included)*
- 6 = M12x1 plug, 4 pole *(connector not included)*
- 8 = M12x1 plug, 5 pole *(connector not included)*

Output
- 1 = 1 Switching Output *(only with electrical connection 6)*
- 2 = 2 Switching Outputs *(only with electrical connection 6)*
- 3 = 1 Switching Output with 1 analog output *(only with electrical connection 6)*
- 5 = 2 Switching Outputs with 1 analog output *(only with electrical connection 8)*

Pressure Range
For EDS 35X only *(SAE 4 7/16-20 UNF2B)*
0089 (-14.5 to 75), 0150, 1000, 3000, 6000, 9000 psi

Modification Number
- 400 = standard in psi
- 401 = vacuum in psi

**Other options available upon request*

Pin Connections

Binder 714 M18

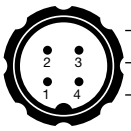

Pin	3X4-2	3X4-3
1	+UB	$+U_B$
2	0 V	0 V
3	SP 1	SP 1
4	SP 2	analog

DIN 43650

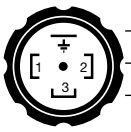

Pin	3X5-1
1	+UB
2	0 V
3	SP 1
4	PE

M12x1, 4 pole

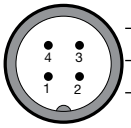

Pin	3X6-1	3X6-2	3X6-3
1	+UB	$+U_B$	$+U_B$
2	nc	SP 2	analog
3	0 V	0 V	0 V
4	SP 1	SP 1	SP 1

M12x1, 5 pole

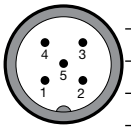

Pin	3X8-5
1	+UB
2	analog
3	0 V
4	SP 1
5	SP 2

Circuit Diagrams

Model EDS 356-1
1 switching output

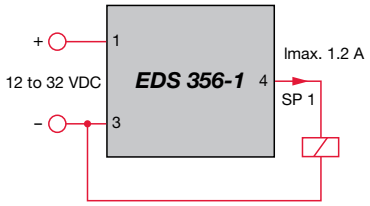

Model EDS 356-2
2 switching outputs

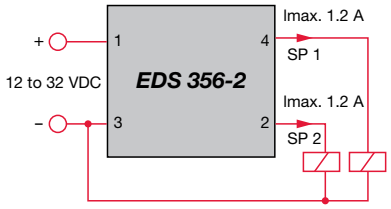

Model EDS 356-3
1 switching output, 1 analog output

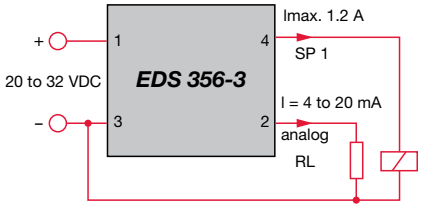

Dimensions

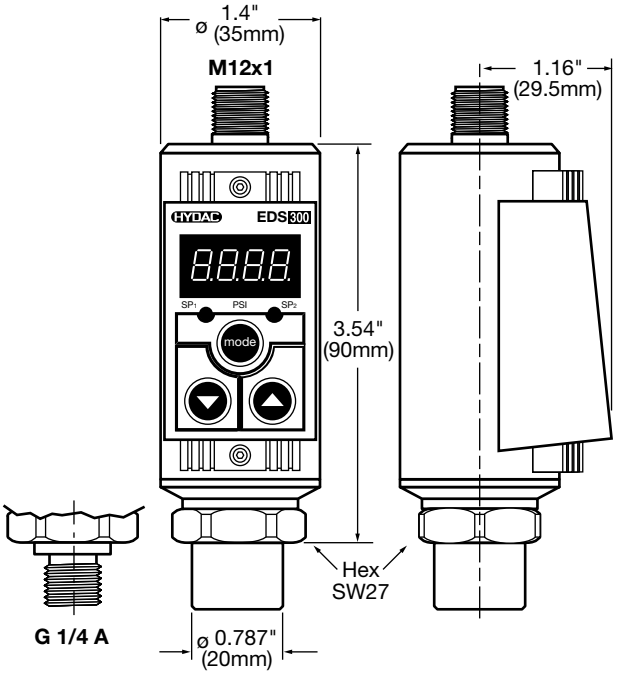

EDS 300 Series

Shipbuilding Pressure Switch with Display

Applications

Description

The EDS 300 is a compact, electronic pressure switch with digital display. The pressure measurement is based on a strain gauge sensor cell on stainless steel. All parts in contact with the medium are stainless steel, and are welded together. Since no seals are required in the sensor interior, the potential for leakage is eliminated.

Two relay switch outputs with N/O function and an additional analog output signal (4 to 20 mA) enable the pressure switch to be incorporated into the most modern control concepts.

The switching points and the corresponding hystereses can be adjusted easily via the keypad.

For optimum adaptation to a particular application, the unit has many additional adjustment parameters, e.g. switching direction of the relays and switching delay times.

Areas of application are pressure for maximum value monitoring on marine transmissions, diesel engines, pumps and general hydraulic and pneumatic systems.

Approvals

CE mark is a mandatory conformity mark on many products placed on the single market in the European Economic Area

American Bureau of Shipping

German Lloyd - GL

Bureau Veritas

Lloyds Register of Shipping - LRS

Det Norske Veritas - DNV

Technical Details

Sensor Specifications	
Measuring ranges - psi	-14.5 to 75, 150, 1000, 3000, 6000, 9000
Overload pressure - psi	290, 290, 2900, 7250, 11600, 14500
Burst pressure - psi	1450, 1450, 7250, 14500, 29000, 29000
Mechanical connection	G1/4A DIN 3852 male *(bar ranges only)* SAE 4 7/16-20 UNF 2B, female *(psi ranges only)*
Tightening torque	G1/4A: 15 ft-lb (20 Nm) SAE 4: 11 lb-ft (15 Nm)
Parts in contact with media	Stainless steel
Accuracy (B.F.S.L.) including linearity, hysteresis, and repeatability	≤ ±0.5% BFSL
Temperature compensation zero point	≤ ±0.0085% / °F typ. ≤ ±0.017% / °F max.
Temperature compensation over range	≤ ±0.0085% / °F typ. ≤ ±0.017% / °F max.
Long-term drift	≤ ±0.3% FS typ. / year
Life expectancy	10 million load cycles (0 to 100% FS)
Weight	Approximately 300 g
Output signal	4 to 20 mA, 2 wire, R_{Lmax} = (UB - 10V) / 20 mA [kΩ]
Switching Specifications	
Type	2 relay contacts (N/O)
Repeatability	≤ ±0.5% FS max.
Switching voltage	max 60 V (AC or DC)
Switching power	max. 30 W / 30 VA *(for inductive load use varistors)*
Switching current	max. 1.0 A
Switching cycles	20 million at minimum load 0.5 million at maximum load
Reaction time	< 10 ms
Environmental Condition	
Compensated temperature range	14° to 158°F (-10° to 70°C)
Operating temperature range	-13° to 176°F (-25° to 80°C)
Storage temperature range	-40° to 176°F (-40° to 80°C)
Media temperature range	-13° to 176°F (-25° to 80°C)
CE mark	EN 61000-6-1 / 2 / 3 / 4
Vibration resistance to DIN EN 60068-2-6 at 10 to 500 Hz	≤ 10g
Environmental protection	IP 65
Electrical Specifications	
Supply voltage	20 to 32 VDC
Residual ripple suppy voltage	≤ 5%
Current Consumption	100 mA *(plus switching current)*
Reverse polarity protection of the supply voltage, excess voltage, override and short circuit protection	Standard
Electrical connection	plug to DIN 43651 (6 pole + earth)
Display	4-digit, 7-segment LED red

Model Code

EDS 3 X X - X - XXXX - S4X PSI

Mechanical Connection*
4 = G1/4A DIN 3852 male *(bar ranges only)*
5 = SAE 4 7/16-20 UNF 2B, female *(psi ranges only)*

Electrical Connection*
7 = DIN 43651 plug, 6 pole + ground *(connector ZBE 10 not included)*

Output
4 = 2 Switching outputs and 1 analog output

Pressure Range
For EDS 35X only *(SAE 4 7/16-20 UNF2B)*
0089 (-14.5 to 75), 0150, 1000, 3000, 6000, 9000 psi

Modification Number
S40 = Standard in psi *(except for -14.5 to 75 psi)*
S41 = Vacuum version in -14.5 to 75 psi

(psi)
psi version *(leave blank for bar version)*

**Other options available upon request*

Pin Connections

DIN 43651

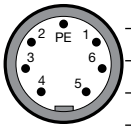

Pin	347-4
1	$+U_B$
2	center relay 1 and 2
3	relay contact 1 (SP 1)
4	0 V
5	analog
6	relay contact 2 (SP 2)
⊥	PE

Circuit Diagram

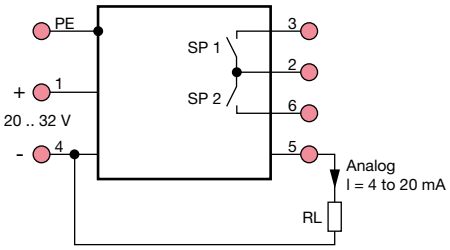

Plug Connection

ZBE 10

Available Adapter

SAE-4 (m) to 1/4 NPT (m) Stainless Steel
Part #02701426

Dimensions

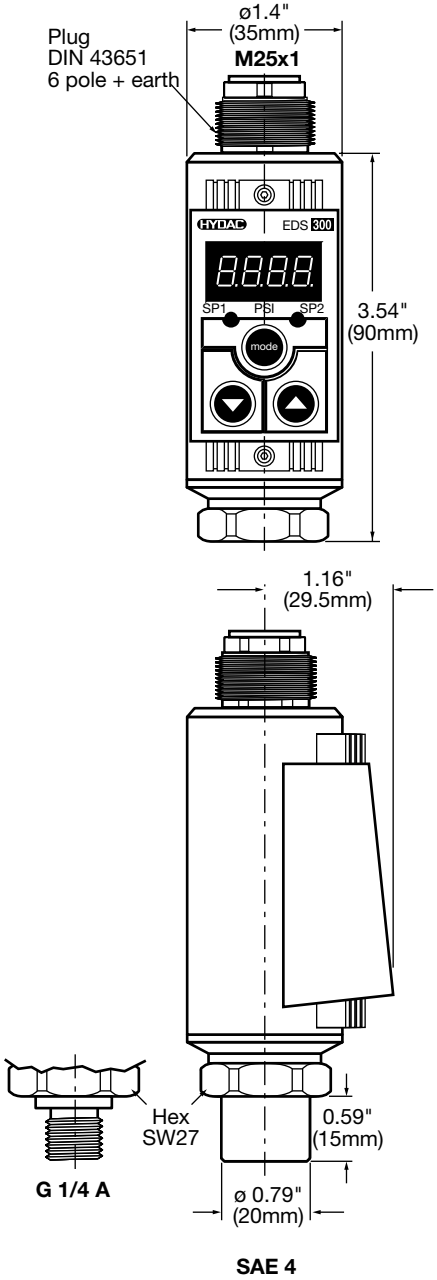

EDS 4300 Series
Low Pressure Programmable Switch

Applications

Description

The programmable electronic pressure switch in the EDS 4300 series has been specially developed to combine the advantages of a compact, robust and cost-effective unit with the benefits of a programmable pressure switch.

The EDS 4300 can be easily programmed using the HPG 3000 programming unit. When the programming unit is disconnected from the EDS 4300, the pressure switch retains all the settings. This prevents unauthorized adjustment of the settings.

The following parameters can be changed:

- Switching point
- Hysteresis
- Switching direction (N/O / N/C)
- Switching delay times

The EDS 4300 is suitable for high pressure applications *(over 500 psi)* and has a pressure measurement cell with thin-film strain gauge on a stainless steel membrane.

In contrast to pressure switches which are permanently pre-set according to customer requirements, the programmable EDS 4300 is highly versatile and replaces a wide range of models.

Special Features

- Option of 1 or 2 switching outputs
- Option of PNP or NPN switching outputs
- High switching output capacity
- Accuracy ≤ ±0.5% BFSL
- Individual programming
- Compact and robust design
- Also available in ATEX version for potentially explosive locations

Approvals

CE mark is a mandatory conformity mark on many products placed on the single market in the European Economic Area

Technical Details

Sensor Specifications		
Measuring ranges - psi	-14.5 to 135.5, 15, 50, 100, 150, 250, 500	
Overload pressure - psi	450, 45, 150, 290, 450, 725, 1500	
Burst pressure - psi	650, 70, 250, 400, 650, 1000, 2500	
Mechanical connection	G1/4A DIN 3852 male *(bar ranges only)* 1/4”-18 NPT male *(psi ranges only)*	
Tightening torque	G1/4: 15 lb-ft (20 Nm) 1/4” NPT: 30 lb-ft (40 Nm)	
Parts in contact with media	Stainless steel, Ceramic, FPM or EPDM seal	
Accuracy (B.F.S.L.) including linearity, hysteresis, and repeatability	≤ ±0.5% BFSL.	
Temperature compensation zero point	≤ ±0.0085% / °F typ.	≤ ±0.017% / °F max.
Temperature compensation over range	≤ ±0.0085% / °F typ.	≤ ±0.017% / °F max.
Long-term drift	≤ ±0.3% FS typ. / year	
Life expectancy	10 million load cycles (0 to 100% FS)	
Weight	Approximately 145 g	
Switching Specifications		
Type	PNP or NPN output	
Repeatability	≤ ±0.1% FS max.	
Switching current	1 Switching output 2 Switching outputs	1.2A 1.0A each
Set point / Reset point	Programmed using HPG 3000 Programming Unit	
Set point in psi	5 to 100% of full range	
Hysteresis in psi	1 to 96% of full range	
NO / NC	Programmed using HPG 3000 Programming Unit	
Switch on/off delay	8 to 2000 ms programmed using HPG 3000	
Switching cycles	≥ 100 million	
Environmental Condition		
Compensated temperature range	-13° to 185°F (-25° to 85°C)	
Operating temperature range	-13° to 185°F (-25° to 85°C)	
Storage temperature range	-40° to 212°F (-40° to 100°C)	
Media temperature range	-40° to 212°F (-40° to 100°C)	
CE mark	EN 61000-6-1 / 2 / 3 / 4	
Vibration resistance to DIN EN 60068-2-6 at 10 to 500 Hz	≤ 20g	
Environmental protection	IP 67 *(ZBE 06 molded cable)*	
Electrical Specifications		
Supply voltage	8 to 32 VDC	
Residual ripple suppy voltage	≤ 5%	
Current consumption	25 mA *(plus switching current)*	
Reverse polarity protection of the supply voltage, excess voltage, override and short circuit protection	Standard	

Model Code

EDS 4 3 X X - XXXX - X P X - 000 - X1 (PSI)

Mechanical Connection*
4 = G1/4A DIN 3852 male *(bar ranges only)*
8 = 1/4"-18 NPT *(psi ranges only)*

Electrical Connection*
8 = M12x1 plug, 5 pole *(connector not included)*

Pressure Range
For EDS 4388 *(1/4"-18 NPT only)*
0135, 0015, 0050, 0100, 0150, 0250, 0500 psi

Output
1 = 1 Switching Output
2 = 2 Switching Outputs

Output Technology
P = Programmable switching output

Output Type
P = PNP switching output
N = NPN switching output

Modification Number
000 = Standard

Seal Material
F1 = FPM Seal *(hydraulic oil)*
E1 = EPDM Seal *(coolant, ammonia, water)*

(psi)
psi version *(leave blank for bar version)*

**Other options available upon request*

Pin Connections

M12x1, 5 pole

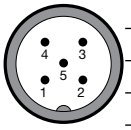

Pin	Process connection	HPG connection
1	$+U_B$	$+U_B$
2	Out 2	nc
3	0 V	0 V
4	Out 1	nc
5	nc	COM port

In process a 4 pole mating connector (e.g. ZBE 06) has to be used.

Dimensions

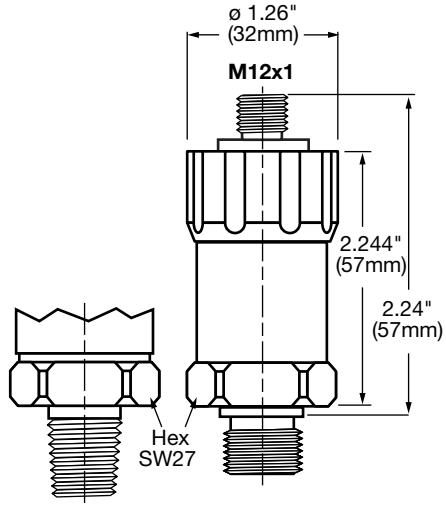

1/4-18 NPT Male G1/4A

HPG 3000 Programming Unit

Manual available online
Part #00909422

ZBE 30-02

Part #06040851

HPG 3000 Power Supply with Connector

Part #02091103

EDS 4400 Series
High Pressure Programmable Switch

Applications

Description

The programmable electronic pressure switch in the EDS 4400 series has been specially developed to combine the advantages of a compact, robust and cost-effective unit with the benefits of a programmable pressure switch.

The EDS 4400 can be easily programmed using the HPG 3000 programming unit. When the programming unit is disconnected from the EDS 4400, the pressure switch retains all the settings. This prevents unauthorised adjustment of the settings.

The following parameters can be changed:

- Switching point
- Hysteresis
- Switching direction (N/O / N/C)
- Switching delay times

The EDS 4400 is suitable for high pressure applications *(over 500 psi)* and has a pressure measurement cell with thin-film strain gauge on a stainless steel membrane.

In contrast to pressure switches which are permanently pre-set according to customer requirements, the programmable EDS 4400 is highly versatile and replaces a wide range of models.

Special Features

- Option of 1 or 2 switching outputs
- Option of PNP or NPN switching outputs
- High switching output capacity
- Accuracy ≤ ±0.5% BFSL
- Individual programming
- Compact and robust design
- Also available in ATEX version for potentially explosive locations

Approvals

CE mark is a mandatory conformity mark on many products placed on the single market in the European Economic Area

Technical Details

Sensor Specifications	
Measuring ranges - psi	1000, 3000, 6000, 9000
Overload pressure - psi	2900, 7250, 11600, 14500
Burst pressure - psi	7250, 14500, 29000, 29000
Mechanical connection	G1/4A DIN 3852 male *(bar ranges only)* SAE 6 9/16-18 UNF 2A *(psi ranges only)*
Tightening torque	15 lb-ft (20 Nm)
Parts in contact with media	Stainless steel, FPM seal
Accuracy (B.F.S.L.) including linearity, hysteresis, and repeatability	≤ ±0.5% BFSL
Temperature compensation zero point	≤ ± 00085% / °F typ. ≤ ±0.017% / °F max.
Temperature compensation over range	≤ ±0.0085% / °F typ. ≤ ±0.017% / °F max.
Long-term drift	≤ ±0.3% FS typ. / year
Life expectancy	10 million load cycles (0 to 100% FS)
Weight	Approximately 145 g
Switching Specifications	
Type	PNP or NPN output
Repeatability	≤ ±0.1% FS max.
Switching current	1 Switching output 1.2A 2 Switching outputs 1.0A
Set point / Reset point	Programmed using HPG 3000 Programming Unit
Set point in psi	5 to 100% of full range
Hysteresis in psi	1 to 96% of full range
NO / NC	Programmed using HPG 3000 Programming Unit
Switching cycles	≥ 100 million
Environmental Condition	
Compensated temperature range	-13° to 185°F (-25° to 85°C)
Operating temperature range	-13° to 185°F (-25° to 85°C)
Storage temperature range	-40° to 212°F (-40° to 100°C)
Media temperature range	-40° to 212°F (-40° to 100°C)
CE mark	EN 61000-6-1 / 2 / 3 / 4
Vibration resistance to DIN EN 60068-2-6 at 10 to 500 Hz	≤ 20g
Environmental protection	IP 67 *(ZBE 06 molded cable)*
Electrical Specifications	
Supply voltage	8 to 32 VDC
Residual ripple suppy voltage	≤ 5%
Current consumption	25 mA *(plus switching current)*
Reverse polarity protection of the supply voltage, excess voltage, override and short circuit protection	Standard

Model Code

EDS 4 4 X X - XXXX - X - P X - 000 (PSI)

Mechanical Connection*
4 = G1/4A DIN 3852 male *(bar ranges only)*
7 = SAE 6 9/16-18 UNF2A *(psi ranges only)*

Electrical Connection*
8 = M12x1 plug, 5 pole *(connector not included)*

Pressure Range
For EDS 4478 *(SAE 6 9/16-18 only)*
1000, 3000, 6000, 9000 psi

Output
1 = 1 Switching Output
2 = 2 Switching Outputs

Output Technology
P = Programmable switching output

Output Type
P = PNP switching output
N = NPN switching output

Modification Number
000 = Standard

(psi)
psi version *(leave blank for bar version)*

**Other options available upon request*

Pin Connections

M12x1, 5 pole

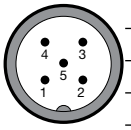

Pin	Process connection	HPG connection
1	$+U_B$	$+U_B$
2	Out 2	nc
3	0 V	0 V
4	Out 1	nc
5	nc	COM port

In process a 4 pole mating connector (e.g. ZBE 06) has to be used.

Dimensions

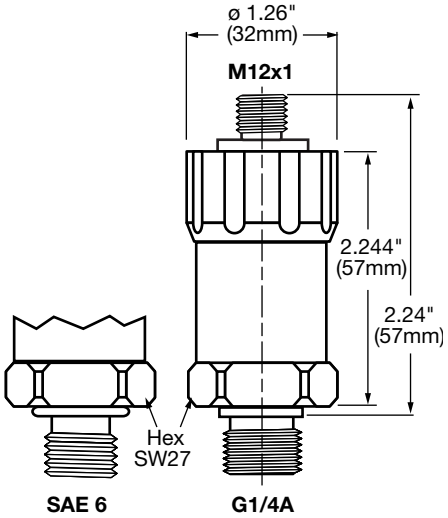

HPG 3000 Programming Unit

Manual available online
Part #00909422

ZBE 30-02

Part #06040851

HPG 3000 Power Supply with Connector

Part #02091103

EDS 1700 Series
Pressure Switch with Display

Applications

Description

The EDS 1700, with its integrated pressure measuring cell, a 4-digit display and the 4 switching outputs, offers the user all the advantages of a modern electronic pressure switch.

4 switching points and reset points can be adjusted very simply and independently of each other using the keypad.

For optimum incorporation into monitoring systems *(e.g. with PLC)*, an analog output (4 to 20 mA or 0 to 10 V) is also available.

The main applications of the EDS 1700 are in hydraulics and pneumatics. The instrument is ideal for use where frequent switching cycles *(several million)* require permanent switching point accuracy for simple and precise adjustment

Special Features

- Integrated pressure sensor with strain gauge on stainless steel membrane
- Accuracy 0.25% or 0.5% BFSL
- 4-digit digital display
- User-friendly key programming
- 4 limit relays, switching points and reset points can be adjusted independently
- Analog output signal selectable
- Many useful additional functions
- Optional mounting position *(pressure connection on the top/bottom, keypad and display can be turned through 180°)*
- Can be set to display values in any unit of measurement e.g.: kN, kg, psi, ...

Approvals

CE mark is a mandatory conformity mark on many products placed on the single market in the European Economic Area

Technical Details

Sensor Specifications	
Measuring ranges - psi	232, 580, 1450, 3625, 5800, 8700
Overload pressure - psi	464, 1160, 2900, 7250, 11600, 14500
Burst pressure - psi	2900, 2900, 7250, 14500, 29000, 29000
Mechanical connection	G1/4A DIN 3852, female
Tightening torque	15 lb-ft (20 Nm)
Parts in contact with media	Stainless steel
Accuracy (B.F.S.L.) including linearity, hysteresis, and repeatability	≤ ±0.25% BFSL (EDS 1700-P) ≤ ±0.5% BFSL (EDS 1700-N)
Temperature drift zero point & range EDS 1700-N EDS 1700-P	≤ ±0.0.0085% / FS typ. ≤ ±0.017% / FS max. ≤ ±0.006% / FS typ. ≤ ±0.012% / FS max.
Long-term drift	≤ ± 0.3% FS typ. / year
Life expectancy	10 million load cycles (0 to 100% FS)
Weight	Approximately 800 g
Output signal	4 to 20 mA, ohmic resistance ≤ 400 Ω 0 to 10 V, ohmic resistance ≥ 2 kΩ
Switching Specifications	
Type	4 relays with change-over contacts in 2 groups *(common supply of each group connected)*
Repeatability	≤ ±0.25% FS max. (EDS 1700-P) ≤ ±0.5% FS (EDS 1700-N)
Switching voltage	100mV to 250 V (AC or DC)
Switching current	0.009 to 2A *(per output)*
Switching power	max. 50 W / 400 VA *(for inductive load use varistors)*
Set point range	1.5 to 100% FS
Reset point range	1 to 99% FS
Switching cycles	> 20 million at minimum load > 1 million at maximum load
Reaction time	< 20 ms
Environmental Condition	
Compensated temperature range	-14° to 158°F (-10° to 70°C)
Operating temperature range	-13° to 140°F (-25° to 60°C)
Storage temperature range	-40° to 176°F (-40° to 80°C)
Media temperature range	-13° to 176°F (-25° to 80°C)
CE mark	EN 61000-6-1 / 2 / 3 / 4
Vibration resistance to DIN EN 60068-2-6 at 10 to 500 Hz	≤ 5g
Environmental protection	IP 65
Electrical Specifications	
Supply voltage	22 to 32 VDC
Residual ripple suppy voltage	≤ 10%
Current consumption	approximately 200 mA
Electrical connection	14-pole terminal block
Reverse polarity protection of the supply voltage, excess voltage, override and short circuit protection	Standard
Display	7 segment LED display, 4 digits, 13 mm high

Model Code

EDS 17 9 X - X - XXXX - 000

Mechanical Connection
9 = G 1/4 DIN 3852 female port

Display
2 = 4 digit psi

Accuracy
P = 0.25% B.F.S.L.
N = 0.5% B.F.S.L.

Pressure Range
For EDS 1792X only *(4 digit psi)*
016 (232), 040 (580), 100 (1450), 250 (3625), 400 (5800), 600 (8700) bar (psi)

Modification Number
000 = Standard

Pin Connections

Pin	
1	$+U_B$
2	0 V
3	Analog output signal +
4	Analog output signal -
5	Relay 1 N/C
6	Relay 1 N/C
7	Center relay 1 and 2
8	Relay 2 N/C
9	Relay 2 N/O
10	Relay 3 N/C
11	Relay 3 N/O
12	Center relay 3 and 4
13	Relay 4 N/C
14	Relay 4 N/O

Dimensions