www.comesa.com

Combi-Coolers
for Mobile Applications

Increased demands for energy efficiency coupled with more stringent noise emission requirements necessitate custom cooling systems tailored to specific mobile needs

HYDAC coolers use a combination of high performance cooling elements combined with high capacity hydraulic driven fan solutions.

Long life DC electrical fans provide trouble free operation in mobile hydraulic applications. The compact design of HYDAC cooling systems allows it to fit in most equipment, providing the highest cooling performance.

To comply with legal requirements for noise, fuel economy and emissions (TIER IV) HYDAC offers a series of advantageous solutions which optimize space and maximize cooling efficiency

- integrated pressure / thermal bypass valves
- hydraulic driven fan with proportional and reversible function
- electrical speed controlled fan drive systems

Multiple Combined Cooling Systems Available For:

- Hydraulic
- Radiator
- Charge Air
- Fuel
- Auxiliary Cooler
- Transmission

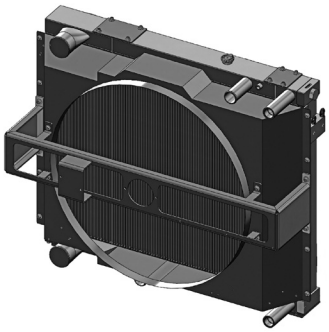

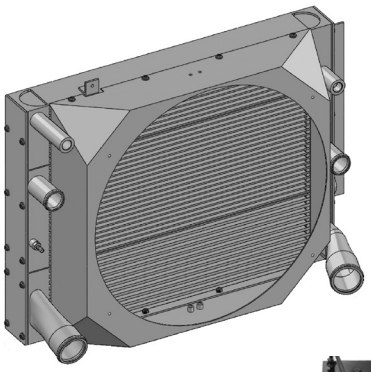

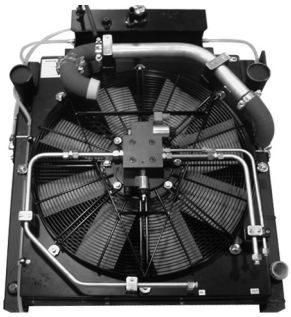

Please see following page for our technical data inquiry sheet and contact our cooling department for more details.

PN#02085359 / 12.12 / COL1112-1396

Combi-Coolers
Technical Data Inquiry Sheet

Internal Use Only	
Project Responsibility	
Date	

Customer Information

Name		Title	
Company		E-mail	
Address		State	Zip
Phone		Fax	

Specifications

Description	Combi-Cooler: CAC / RAD / TC
Project	
Engine Type	
Customer	
Ambient Requirement	

Ambient Requirement

Cooling Circuit 1 CAC Required Data

Heat Rejection		KW
Mass Flow		Kg/min
Temperature Inlet		°C
Temperature Outlet		°C
CAC Pressure Drop		mbar
Max. Working Pressure		bar

Cooling Circuit 2 RAD Required Data

Heat Rejection		KW
Volume Flow		L/min
Temperature Inlet		°F
RAD Pressure Drop		mbar
Max. Working Pressure		bar

Cooling Circuit 4 T/C OIL Required Data

Type Of Oil		
Heat Rejection		KW
Volume Flow		L/min
Temperature Inlet		°C
Max. Working Pressure		bar

www.comoso.com

OK / OKC / ELD / ELH / SC

Technical Data Inquiry Sheet

Internal Use Only	
Project Responsibility	
Date	

Contact Information

Distributor:		Company Name:	
Distributor Contact:		Customer Contact:	
Distributor Phone:		Customer Phone:	
Distributor Fax:		Customer Fax:	
Distributor E-mail:		Customer E-mail:	

The following basic information is needed for the proper sizing and ordering of a cooler unit.

Critical Sizing Data

Heat Load To Be Removed: (HP)

Oil Type: (ISO VG or SAE grade) _____

Oil Flow: (gpm) _____

Desired Oil Temperature: (°F) _____

Ambient Temperature: (°F)

Inlet Water Temperature: (°F) _____

Power Data

AC		DC	
115V1PH	☐	12V	☐
230V1PH	☐	24V	☐
230V3PH	☐		
460V3PH	☐		
575V3PH	☐		
Other	☐	Specify:	

Hydraulic Flow Rate _____ gpm (l/min)

PN#02085359 / 12.12 / COL1112-1396

OKC / OK / ELD / ELH Series

Crossovers

HYDAC	Thermal Transfer	AKG	Oil Air	American Industrial	Hayden
OKC-1H	AO5	–	–	–	108-028510
OKC-2H	AO10, AO15, AOVH5, AOC-19, AOC-22	–	OAI 04	AC5, AC10, AC15	108-028514
OKC-3H	AO20, AOVH10, AOC-24, BOL-8	AC8	OAI07-4, OAI07-2	AOCH5	–
OKC-4S	AO25, AOVH15, AOC-33, BOL-16		OAI11-4	AC 20, AOCH10	208-028518, 208-028522
OKC-5S	AO30, AOVH20, AOC-37	AC16	OAI11-2, OAI16-6, OAI16-4	AC25, AOCH15, AOCH20	213-028538
OKC-6H	AOVH25, AOC-50	AC30	OAI23-6, OAI23-4	AC30	113-028526, 113-028530, 213-028534
OKC-6S	AO35	–	–	–	–
OKC-7S	BOL-30. APC-54. BOL-400, AO40	–	–	AC35, AOCH25	–
OK-1H	–	–	–		108-028510
OK-2S	AO5, AO10, AOC-19, AOC-22	–	–	AC5, AC10	108-028514
OK-2H	–	AC8	OAI-04, OAI07-4	AC15, AOCH5	–
OK-3S	BOL-8	–	OAI07-2	–	–
OK-3H	AO20	–	OAI11-4	AC20	208-028518, 208-028522
OK-4L	AOVH15, AOC33	–	–	AOCH10	–
OK-4S	AOVH20, AOC-37	–	OAI11-2	AC25	–
OK-5L	AO25, BOL-16	–	–	–	–
OK-5S	–	–	OAI23-6, OAI16-4	–	–
OK-6L	AO30, AOC-50	AC16	OAI-16-4	AOCH15	113-028530
OK-6S	AO35, AOVH25	AC30	–	AC30, AOCH20	113-028526, 213-028534
OK-7L	AO40	–	–	–	213-028534
OK-7S	–	–	–	–	313-028542, 313-028546
OK-8L	AOVH30, AOC-54, BOL-30, BOL-400	–	–	AC35, AOCH25	–
OK-8S	AOC-57, BOL-725	AC40	OAI33-6, OAI33-4, OAI44-6	AC40	318-028926
OK-9L	AOVH35	–	–	–	318-028926
OK-10L	AOC-70, BOL-950	AC10	OAI44-4, QAI56-6	AOCH35	–
OK-11L	AOVH40, BOL-1200, BOL-1600	AC100	OAI56-4, OAI76-8, OAI76-6	AOCH40	–
ELD-1H	AOC-19	–	–	AOMF-1, LP15	–
ELD-1.5H	DF-11	DC-10	OATBD04	EOC-220	–
ELD-2H	AOC-22, AOC-24, DF-12, MA-12	DC-16	OATBD07	AOMF-2, AOMF-4, LP-30, LP-60, EOC-249	–
ELD-3H	AOC-33	DC-20	–	EOC-337	–
ELD-4H	AOC-37, DF-22, MA-32	–	OATBD11, OATBD16	EOC-375, EOC-505	–
ELD-4.5H	AOC-50	–	–	EOC-545	–
ELD-5H	AOC-54	–	OATBD23	–	–
ELD-6H	AOC-57	–	–	–	–
ELH-2	AOC-70, DF-11, DF12	HC-14	–	–	–
ELH-3	AOC-22, AOC-24	HC-26	OAH007	–	–
ELH-4	AOC-33, DF-22	HC-32	OAH011, OAH016	–	–
ELH-5	AOC-37	–	OAH023	–	–
ELH-6	AOC-50	–	–	–	–
ELH-7	–	HC-48	OAH033, OAH094	–	–
ELH-8	AOC-54	–	OAH056	–	–
ELH-9	AOC-57	HC-120	OAH058, OAH076	–	–
ELH-10	AOC-70	–	OAH028, OAH110	–	–
ELH-11	–	HC-180	OAH112	–	–

Every effort has been made to insure the accuracy of the cooler data and cross reference information. However, due to manufacturer design changes, HYDAC cannot accept responsibility for selection or misapplication of the product. Please contact HYDAC for additional information.