PVplus High Pressure Industrial Piston Pumps

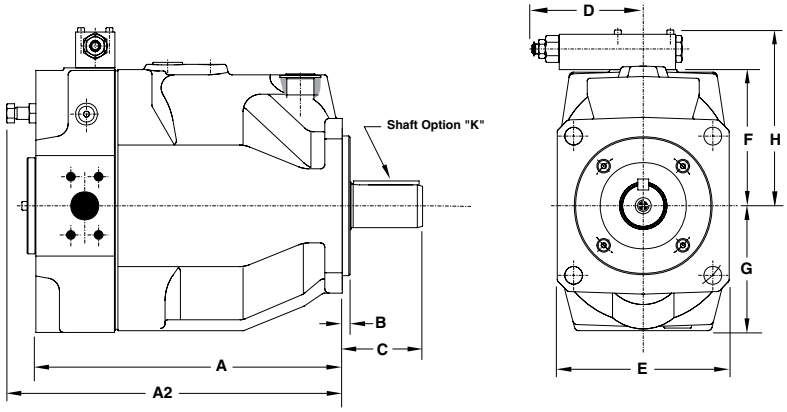

Dimensions, inch (mm)

Model	A	A2 Max.	B	C	D Max.	E	F	G	H
PV016/020/023	77.8 (195)	83.5 (212)	0.37 (9)	2.0 (52)	0.49 (12.44)	5.2 (132)	3.7 (94)	3.1 (80)	5.5 (140)
PV032/040/046	89 (227)	96 (245)	0.50 (9)	2.7 (68)	2.19 (55.62)	6.1 (156)	4.2 (107)	3.6 (92)	6.0 (153)
PV063/080/092	112.9 (287)	120.5 (306)	0.50 (9)	3.6 (92)	4.25 (107.95)	8.0 (204)	5.3 (135)	4.6 (118)	7.1 (181)
PV140/180	138 (350)	152 (385)	0.50 (9)	3.6 (92)	4.25 (107.95)	7.8 (200)	6.2 (158)	5.7 (145)	8.0 (204)
PV270	186 (472.5)	201 (510)	0.50 (9)	4.5 (115)	—	10.4 (265)	7.2 (184)	6.9 (176)	9.1 (230)
PV360	187.7 (477)	201 (510)	0.50 (9)	4.5 (115)	—	98.4 (250)	7.2 (184)	6.9 (176)	9.1 (230)

Filtration and auxiliary function pump suggestions

Pump

Model Code	Flow @1800 RPM GPM (LPM)	Pressure PSI (BAR)
T67B-B02-3R00-A100	3 (11.4)	4000 (275.8)
T67B-B04-3R00-A100	6 (22.7)	4000 (275.8)
T67B-B07-3R00-A100	10 (37.9)	4000 (275.8)

Thru-Drive Kits

Pump Series	Kit #	Mount
PV016/020/023	MK-PVBG1BSN45 plus MK-PVBG1K1342	SAE B
PV032/040/046	MK-PVBG2BSN40 plus MK-PVBG2K1340	SAE B
PV063/080/092	MK-PVBG3BSN41 plus MK-PVBG3K1341	SAE B
PV140/180	MK-PVBG4BSN40 plus MK-PVBG4K1340	SAE B
PV270	MK-PVBG5BSN40 plus MK-PVBG5K1340	SAE B
PV270	MK-PVBG5BSN40 plus MK-PVBG5K1340	SAE B

* Verify correct design series

Piston Pumps

PVplus 016-046cc Model Ordering Code

PV									
Pump Variable Piston	Displace-ment	Rotation	Pump Variations	Shaft & Mounting	Threads Code	Thru-Drive Option	Coupling Code	Seals	Control Options

Code	Displacement in³/rev (cc/rev)
016	.98 (16)
020	1.2 (20)
023	1.4 (23)
028	1.7 (28)
032	1.9 (32)
040	2.4 (40)
046	2.8 (46)

Code	Rotation*
R	CW
L	CCW

*As viewed from shaft end.

Code	Pump Variations
1	Standard
9*	Customized Displacement and/or Pressure Setting

*Specify in cc/rev and/or bar.

Code	Shaft & Mounting			
	PV016/020/023		PV032/040/046	
	Shaft	Pilot	Shaft	Pilot
D	1" Keyed (SAE BB)	4 Bolt SAE B	1¼" Keyed (SAE C)	4 Bolt SAE C
E	15T Spline (SAE BB)	4 Bolt SAE B	14T Spline (SAE C)	4 Bolt SAE C
K	25mm Keyed	4 Bolt 100mm	32mm Keyed	4 Bolt 125mm
L	W25 x 1.5 x 15 x 8f Spline DIN 5480	4-Bolt 100mm	W32 x 1.5 x 20 x 8f Spline DIN 5480	4 Bolt 125mm

Code	Threads Code	
	Port*	Threads**
1	BSPP	Metric
3	UNF	UNC
7	ISO 6149	UNC
8	ISO 6149	Metric

*Drain, gage, and flushing ports.
** Mounting and connecting threads

Code	Thru-Drive Option (1st Digit)
T	Single Pump Prepared for Thru-Drive
	With Adapter for Second Pump
Y[1]	SAE AA, ∅2.00in (∅50.8mm)
A	SAE A, ∅3.25in (∅82.55mm)
B	SAE B, ∅4.00in (∅101.6mm)
C[2]	SAE C, ∅5.00in (∅127mm)
G	Metric, ∅2.48in (∅63mm)
H	Metric, ∅3.15in (∅80mm)
J	Metric, ∅3.94in (∅100mm)
K[2]	Metric, ∅4.92in (∅125mm)

Code	Second Pump (2nd Digit)
1	Single Pump, No Coupling
H	w/Coupling, 25 x 1.5 x 15, DIN 5480
J	w/Coupling, 32 x 1.5 x 20, DIN 5480
Y	w/SAE Coupling, 9T-16/32 DP
A	w/SAE Coupling, 11T-16/32 DP
B	w/SAE Coupling, 13T-16/32 DP
C*	w/SAE Coupling, 15T-16/32 DP
D	w/SAE Coupling, 14T-12/24 DP
E	w/SAE Coupling, 17T-12/24 DP

1 Only for PV016 thru PV023
2 Only for PV032 and larger
* Only for PV032 and larger

Code	Coupling Code
1	Single pump, no coupling
H	with coupling 25 x 1.5 x 15, DIN 5480
J	with coupling 32 x 1.5 x 20, DIN 5480
Y	with coupling SAE A 9T-16/32 DP
A	with coupling SAE - 11T-16/32 DP
B	with coupling SAE B 13T-16/32 DP
C	with coupling SAE B-B 15T-16/32 DP
D	with coupling SAE C 14T-12/24 DP

Code	Seals
N	Nitrile
V	Fluorocarbon
W	Nitrile w/PTFE Shaft Seal
P	FPM w/PTFE Shaft Seal

Code			Control Options	
			Standard Pressure Compensator	
0	0	1	No Compensator	
1	0	0	With Cover Plate, No Control Function	
M	M		Standard pressure control, integrated pilot valve	
M	R		Remote pressure control, integrated pilot valve	
M	F		Load Sensing (flow) control, integrated pilot valve	
M	T		Two spool LS control	
•	•	•	**Remote/Load Sense Compensator**	
		C	Standard version[1]	
		1	NG6 interface top side for pilot valves	
		W	With unloading function, 24VDC solenoid[1]	
		K	Prop.-pilot valve type PVACRE..35 mounted	
		Z	Without integrated pilot valve, NG6 interface, for mounting of accessory code PVAC	
		P	MT1 with mounted pilot valve PVAC1P[2]	
•	•	•	**Horsepower Compensator Control**	
			Nominal Horsepower at 1500 RPM	
B			3 HP (19.5 Nm Torque)	PV016/020/023
C			4 HP (26 Nm Torque)	PV016/020/023
D			5.5 HP (36 Nm Torque)	PV016/020/023
E			7.5 HP (49 Nm Torque)	PV016/020/023
G			11 HP (71 Nm Torque)	PV016/020/023
H			15 HP (97 Nm Torque)	PV016/020/023
K			18.5 HP (120 Nm Torque)	PV016/020/023
M			22 HP (142 Nm Torque)	PV032/040/046
S			30 HP (195 Nm Torque)	PV032/040/046
			Function	
	L		Horsepower Compensator	
	C		Horsepower Compensator & Load Sensing	
			Variation	
		A	NG6 Interface Top Side	
		B	No Pressure Compensation	
		C	Adjustable Pressure Compensation	
		D	Proportion Pilot Valve PVACPP* Mounted	
		Z	Accessories Mounted	
•	•	•	**Electro Hydraulic Control Options**	
F	P	V	Proportional displacement control, no pressure compensation	
U	P		Proportional displacement control, with pressurecompensation	

1 Not for MT
2 Only for MT

NOTES:
Compensator differential Δp is to be adjusted:
Remote pressure comp., horsepower comp. 15 ± 1 bar
Load-sensing comp. (not horsepower comp.) 10 ± 1 bar
(Codes MF* and LS part of MT*)
Consult catalog on CD for electrohydraulic control options.

www.comoso.com 800.696.6165

Piston Pumps

PVplus 063-360cc Model Ordering Code

PV									
Pump Variable Piston	Displace-ment	Rotation	Variations	Shaft & Mounting	Threads Code	Thru-Drive Option	Coupling Code	Seals	Control Options

Code	Displacement in³/rev (cc/rev)
063	3.8 (63)
080	4.8 (80)
092	5.6 (92)
140	8.5 (140)
180	10.9 (180)
270	16.5 (270)
360	22.0 (360)

Code	Rotation*
R	CW
L	CCW

*As viewed from shaft end.

Code	Pump Variations
1	Standard
9*	Customized Displacement and/or Pressure Setting

*Specify in cc/rev and/or bar.

Code	Shaft & Mounting					
	PV063/ 080/092		PV140/ 180		PV270	
	Shaft	Pilot	Shaft	Pilot	Shaft	Pilot
D	1¾" Keyed (SAE D)	4 Bolt SAE D	2" Keyed SAE F	4 Bolt SAE D	2" SAE Keyed	4 Bolt SAE E
E	13T Spline (SAE D)	4 Bolt SAE D	15T Spline SAE F	4 Bolt SAE D	15T Spline SAE F	4 Bolt SAE E
F			1¾" Keyed SAE D	4 Bolt SAE D		
G			13T Spline SAE D	4 Bolt SAE D		
K	40mm Keyed	4 Bolt 160 mm	50mm Keyed	4 Bolt 160 mm	65mm Keyed	4 Bolt 200 mm
L	W40 x 1.5 x 25 x8f Spline DIN 5480	4 Bolt 160 mm	W50 x 2 x 24 x 9g Spline DIN 5480	4 Bolt 160 mm	W60 x 2 x 28 x 9g Spline DIN 5480	4 Bolt 200 mm

Code	Threads Code	
	Port*	Threads**
1	BSPP	Metric
3	UNF	UNC
4***	BSPP-M14	Metric
7	ISO 6149	UNC
8	ISO 6149	Metric

* Drain, gage, and flushing ports.
** Mounting and connecting threads
*** Only for PV063-PV180; pressure port 1¼" with 4xM14 instead of 4xM12

Code	Thru-Drive Option (1st Digit)
T	Single Pump Prepared for Thru-Drive
	With Adapter for Second Pump
A	SAE A, ∅3.25in (∅82.55mm)
B	SAE B, ∅4.00in (∅101.6mm)
C	SAE C, ∅5.00in (∅127mm)
D[1]	SAE D, ∅6.00in (∅152.4) mm
E[2]	SAE E, ∅6.50in (∅165.1mm)
G[3]	Metric, ∅2.48in (∅63mm)
H	Metric, ∅3.15in (∅80mm)
J	Metric, ∅3.94in (∅100mm)
K	Metric, ∅4.92in (∅125mm)
L[1]	Metric, ∅6.30in (∅160mm)
M[2]	Metric, ∅7.87in (∅200mm)

1 Only for PV063 and larger
2 Only for PV270
3 Only up to PV092

Code	Second Pump* (2nd Digit)
1	No Second Pump and Coupling
2	PV140 or PV180 Mounted
3	PV Pump Mounted
4	Gear Pump Series PGP Mounted

* Specify 2nd pump with full model code.

COMPENSATOR NOTES:
Compensator differential Δp is to be adjusted:
Remote pressure comp., power comp. 15 ±1 bar.
(Codes FR*. FT*, *L*, *C*, FPR, FPZ, FPG)
Load-sensing comp. (not power comp.) 10 ± 1 bar (Codes FF*)
Consult catalog on CD for electrohydraulic control options.

Code	Control Options
• • •	**Standard Pressure Compensator**
0 0 1	No Compensator
1 0 0	With Coverplate, No Control Function
M M	Standard pressure control, integrated pilot valve
M R	Remote pressure control, integrated pilot valve
M F	Load Sensing (flow) control, integrated pilot valve
M T	Two spool LS control
• • •	**Remote/Load Sense Compensator**
C	Standard version[1]
1	NG6 interface top side for pilot valves
W	With unloading function, 24VDC solenoid[1]
K	Prop.-pilot valve type PVACRE..35 mounted
Z	Without integrated pilot valve, NG6 interface, for mounting of accessory code PVAC
P	MT1 with mounted pilot valve PVAC1P[2]
• • •	**Horsepower Compensator Control**
	Input Horsepower at 1500 RPM
G	11 HP (71 Nm Torque)
H	15 HP (97 Nm Torque)
K	18.5 HP (120 Nm Torque)
M	22 HP (142 Nm Torque)
S	30 HP (195 Nm Torque)
T	37 HP (240 Nm Torque)
U	45 HP (290 Nm Torque)
W	55 HP (355 Nm Torque)
Y	75 HP (485 Nm Torque)
Z	90 HP (585 Nm Torque)
2	110 HP (715 Nm Torque)
3	132 HP (850 Nm Torque)
4	160 HP (850 Nm Torque)
5	180 HP (850 Nm Torque)
6	200 HP (850 Nm Torque)
	Function
L	Horsepower Compensator
C	Horsepower Compensator & Load Sensing
	Variation
A	NG6 Interface Top Side
B	No Pressure Compensation
C	Adjustable Pressure Compensation
D	Proportional Pilot Valve PVACPP* Mounted
Z	Accessories Mounted[3]
• • •	**Electro Hydraulic Control Options**
F P V	Proportional displacement control, no pressure compensation
U P	Proportional displacement control, with pressurecompensation

PV063/080/092 | PV140 | PV180 | PV270 | PV360

1 Not for MT
2 Only for MT
3 Accessories not included. Please specify on order with full model code.

Code	Coupling Code
1	Single pump, no coupling
H	with coupling 25 x 1.5 x 15, DIN 5480
J	with coupling 32 x 1.5 x 20, DIN 5480
K	with coupling 40 x 1.5 x 25, DIN 5480
L	with coupling 50 x 2 x 24, DIN 5480
Y	with coupling SAE A 9T-16/32 DP
A	with coupling SAE - 11T-16/32 DP
B	with coupling SAE B 13T-16/32 DP
C	with coupling SAE B-B 15T-16/32 DP
D	with coupling SAE C 14T-12/24 DP
E	with coupling SAE C - C
F	with coupling SAE D, E
G	with coupling SAE F

Code	Seals
N	Nitrile
V	Fluorocarbon
W	Nitrile w/PTFE Shaft Seal
P	FPM w/PTFE Shaft Seal

www.comoso.com 800.696.6165

Premier Series High Pressure/Performance Piston Pumps

The open circuit Premier Series pumps are variable displacement piston pumps with emphasis on superior design with few maintenance requirements. Superior inlet characteristics allow the pumps to run faster than competitive models without the added expense of boosting the inlet. Modified pistons that reduce the amount of trapped fluid volume result in improved efficiency.

The Premier Series pumps have been designed to operate on a variety of fluid types and in a wide range of industries where variable flow, high pressure and/or high speeds are required; such as: presses, construction machinery, injection molding, wood, aircraft, drilling, mining, steel and cranes.

Pump Performance Data

Model Series	Displacement in³/rev (cc/rev)	Max. Continuous Pressure PSI (BAR)	Max. Intermittent Pressure PSI (BAR)	Max Rated Drive Speed RPM	Pump Flow 1800 RPM & 100 PSI GPM (LPM)	Input Horsepower 1800 RPM & 5000 PSI HP (KW)
P05/P080	4.90 (80.3)	6000 (420)	7250 (500)	2550	38 (143.8)	113 (84.3)
P07/P110	6.70 (109.8)	6000 (420)	7250 (500)	2450	52 (196.8)	171 (127.5)
P09/P140	8.60 (140.9)	6000 (420)	7250 (500)	2300	66.5 (251.7)	217 (161.8)
P12/P200	12.20 (200.0)	6000 (420)	7250 (500)	2100	95 (359.6)	308 (229.7)
P16/P260	16.00 (262.2)	6000 (420)	7250 (500)	1850	124 (469.4)	404 (301.3)

Markets	Applications
Industrial	Presses, Shears, Aircraft Test Stands, Test Equipment, Simulators
Oil & Gas	Cementer & Pumper Centrifugal Drives
Mining	Tram, Steering, Conveyors

www.comoso.com 800.696.6165

Premier Series High Pressure/Performance Piston Pumps

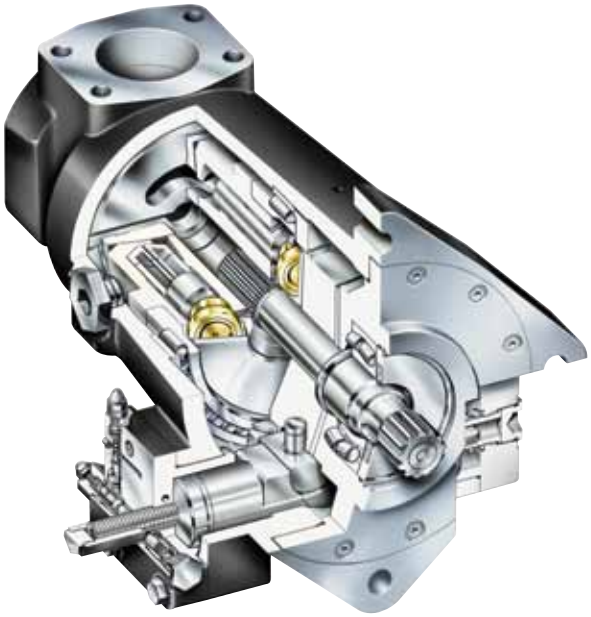

Benefits/Features

- Highest rated pressure of any comparable pump available in the market place today.
- Full power thru-drive capability allows two (2) pumps of the same displacement to be run in tandem at full rated pressure and flow, simultaneously.
- Fast, compensator response minimizes pressure overshoot.
- Two stage, pilot operated compensator provides sharp pressure cutoff at compensator setting, typically regulating pressure within 50 PSI (3.5 BAR). Compensator may easily be remotely controlled or used in load-sensing circuits.
- Precision barrel bearing absorbs radial forces, allowing longer operation at higher pressure and higher speeds.
- Piston design minimizes trapped oil volume to maximize efficiency.
- Angled barrel ports reduce the piston circle diameter, which allows oil to enter at reduced velocity. This allows the pump to run faster, with atmospheric inlet pressure.
- Spherical port plate and barrel face provides support to barrel to offset forces from angled ports.
- Large suction port reduces inlet flow velocity to allow the pumps to run at higher speeds with atmospheric inlet.
- Standard SAE split flange with inch or metric bolts, depending on pump version (SAE or metric)
- Conforms to SAE or ISO mounting standards.
- Damped low inertia rocker cam allows very quick compensation, resulting in more stable and quieter pump.
- Heavy duty shaft bearing to absorb side and thrust loads.
- High pressure shaft seal allows higher case pressure without external leakage. Note: it is always advisable to maintain the lowest possible case pressure.
- Drive shaft options include keyed or splined in SAE, ISO and DIN.
- A wide variety of optional controls are available and are designed with simplicity and a maximum of common elements.

Premier Series High Pressure/Performance Piston Pumps

Performance Characteristics

Premier Series Input Drive Power - 1800 RPM

40˚C Inlet Oil Temperature – ISO VG 32 Fluid – Max. Displacement

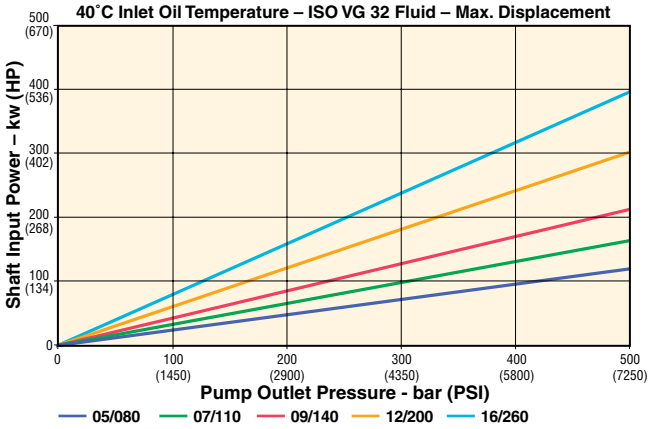

Premier Series Pump Outlet Flow - 1800 RPM

40˚C Inlet Oil Temperature – ISO VG 32 Fluid – Max. Displacement

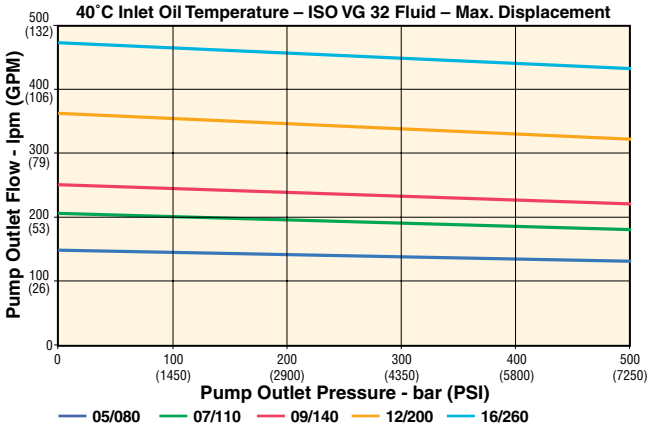

Premier Series Overall Efficiency - 1800 RPM

40˚C Inlet Oil Temperature – ISO VG 32 Fluid – Max. Displacement

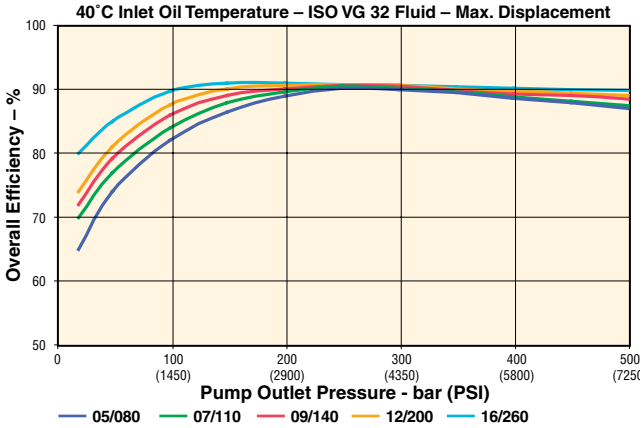

www.comoso.com 800.696.6165