EGFL Series CurrentWatch Current Sensors

Contents

Description	*Page*
EGFL Series CurrentWatch Current Sensors	
Features	**V8-T7-43**
Standards and Certifications	**V8-T7-38**
Product Selection	**V8-T7-43**
Technical Data and Specifications	**V8-T7-43**
Wiring Diagrams	**V8-T7-44**
Dimensions	**V8-T7-44**

EGFL Series CurrentWatch Current Sensors

Product Description

The CurrentWatch EGFL Series from Eaton's electrical sector is a family of ground fault (earth leakage) sensors. Ground fault sensors help protect people, products and processes from damage by ground fault conditions by monitoring all current-carrying conductors in grounded single- and three-phase delta or wye systems. For more information, see "Zero Sequence" Operating Principle on this page. The EGFL Series is available with either solid-state or mechanical relay outputs.

The EGFL Series with mechanical relays are available in solid-core housings with a choice of NO or NC SPST latching relays and a SPDT Form C relay with auto-reset. All mechanical models can be ordered with a fixed setpoint or with a "tri-set" option, which provides three factory-set, field adjustable setpoints.

Application Description

Typical Applications

- **Personnel Protection (Typically 5 mA)**—Detects sensitive ground fault conditions, which could cause injury to people, and functions as a sensor and alarm trigger when part of an overall ground fault protection system
- **Equipment Protection (Typically 10 or 30 mA)**—For applications where personnel protection is not the primary concern, higher setpoint capability helps eliminate nuisance tripping while still providing adequate ground fault detection to protect machine electronics
- **Regulatory**—Meets requirements as stipulated by governmental and industrial regulatory groups for ground fault sensing

Example Application—Insulation Breakdown Monitoring

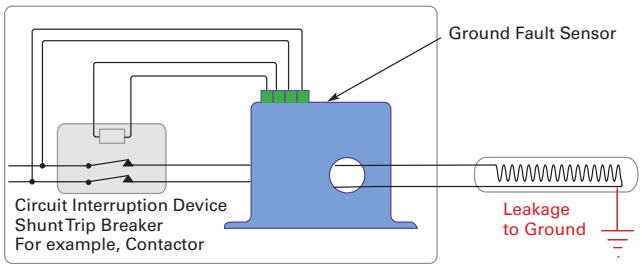

"Zero Sequence" Operating Principle

In three-phase delta and wye systems, under normal conditions, current in the "hot" leg of a two-wire load is equal in magnitude but opposite in sign to the current in a neutral leg. As a result, the electromagnetic fields surrounding these two conductors cancel, producing a "zero sum current." As soon as current leaks to ground (fault condition), the two currents become imbalanced and a net magnetic field results. The CurrentWatch EGFL Series sensors monitor this field and trip alarm contacts when the leakage rises above the setpoint.

For the most current information on this product, visit our Web site: www.eaton.com

For Customer Service in the U.S. call 1-877-ETN CARE (386-2273), in Canada call 1-800-268-3578.
For Application Assistance in the U.S. and Canada call 1-800-426-9184.

Features

- **Broad Range of Options to Meet Application Needs**—Mechanical relays, normally energized or normally de-energized contacts
- **Setpoint Options Maximize Ease-of-Use and Application Flexibility**—Field selectable 5, 10 or 30 mA setpoints on the EGFL "tri-set" models make user adjustments fast, sure and convenient
- **Compatible with Standard Equipment**—Application on single- and three-phase systems, ideal for use with shunt trip breakers, and magnetically isolated from monitored circuit and control power
- **Agency Approved**—UL and CE Certified, accepted worldwide

Standards and Certifications

- UL Approved
- UL 1053, Class 1 Recognized
- CE
- cULus

Listed

DANGER

THIS SENSOR IS NOT A SAFETY DEVICE AND IS NOT INTENDED TO BE USED AS A SAFETY DEVICE. This sensor is designed only to detect and read certain data in an electronic manner and perform no use apart from that, specifically no safety-related use. This sensor product does not include self-checking redundant circuitry, and the failure of this sensor product could cause either an energized or de-energized output condition, which could result in death, serious bodily injury, or property damage.

Product Selection

EGFL Series CurrentWatch Current Sensors

Mechanical Relay Sensors

Solid-Core Housing

Power Supply	Setpoint	Output Type	Contacts	Catalog Number
Solid-Core Housings				
120 Vac	Tri-set adjustable, 5, 10 or 30 mA	Mechanical relay, NO SPST relay, Form A	Latching relay	**EGFL1NOLAT3**
		Mechanical relay, NC SPST relay, Form B	Latching relay	**EGFL1NCLAT3**
		Mechanical relay, SPDT Form C, auto-reset	Normally energized	**EGFL1SPDTNET3**
			Normally de-energized	**EGFL1SPDTDET3**
24 Vac/dc	Tri-set adjustable, 5, 10 or 30 mA	Mechanical relay, NO SPST relay, Form A	Latching relay	**EGFL2NOLAT3**
		Mechanical relay, NC SPST relay, Form B	Latching relay	**EGFL2NCLAT3**
		Mechanical relay, SPDT Form C, auto-reset	Normally energized	**EGFL2SPDTNET3**
			Normally de-energized	**EGFL2SPDTDET3**

Technical Data and Specifications

EGFL Series CurrentWatch Current Sensors

Description	Specifications
Power supply	120 Vac (55–110% of nominal voltage) 24 Vac/dc (± 20%)
Output signal	Mechanical relay
Output rating	Auto reset models, SPDT relay: 1A at 125 Vac; 2A at 30 Vdc Latching models, SPST relay: 1A at 125 Vac; 2A at 30 Vdc
OFF-state leakage	None
Response time	200 ms at 5% above trip point 60 ms at 50% above trip point 15 ms at 500% above trip point
Frequency range	50–400 Hz (monitored circuit)
Loading	2VA max.
Isolation voltage	5000 Vac (tested)
Sensing aperture	1.83 in (46.5 mm) diameter
LED indicator	Green LED for power ON status Red LED for contact status
Housing	UL94 V0 flammability rated
Environmental	Operating temperature: –4° to +122°F (–20° to +50°C) Humidity: 0–95% RH, non-condensing

Output Tables

Protection from faults and control power loss.

Normally Energized Models

		Control Power Applied	
	No Power	**No Fault**	**Fault**
Normally open models	Open	Closed	Open
Normally closed models	Closed	Open	Closed

Normally De-Energized Models

		Control Power Applied	
	No Power	**No Fault**	**Fault**
Normally open models	Open	Open	Closed
Normally closed models	Closed	Closed	Open

Latching Models

Latching models power up initially in the rest (normal) mode. If there is a fault condition or the test button is pushed, the output contacts will change state and latch. The output will remain latched regardless of whether the fault is cleared or control power is removed. To reset the output, apply a momentary contact across "reset" terminals.

Wiring Diagrams

General Wiring Diagram for Ground Fault Sensors

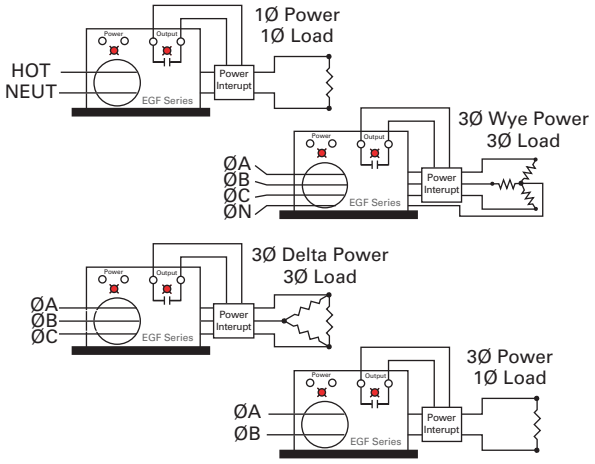

Latching Models

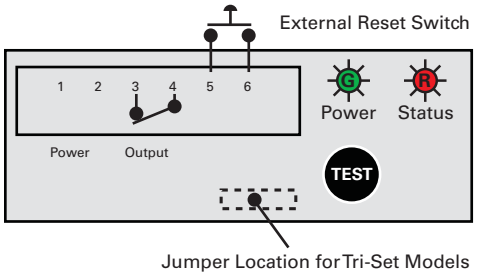

Auto Reset Models

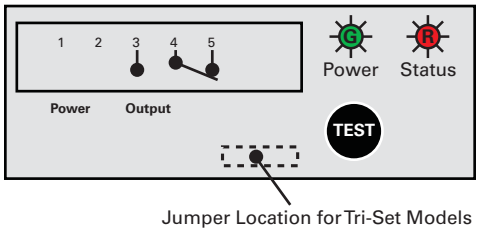

Dimensions

Approximate Dimensions in Inches (mm)

Mechanical Relay Models