ENGINEERING YOUR SUCCESS.

PARKER ECL

E Series Closed Loop Stepper Systems

Effective: October 2016

Contents 2

Introduction

Before Operation

Important Safety Information

It is important that motion control equipment is installed and operated in such a way that all applicable safety requirements are met. It is your responsibility as an installer to ensure that you identify the relevant safety standards and comply with them; failure to do so may result in damage to equipment and personal injury. In particular, you should study the contents of this user guide carefully before installing or operating the equipment.

The installation, set up, test and maintenance procedures given in this user guide should only be carried out by competent personnel trained in the installation of electronic equipment. Such personnel should be aware of the potential electrical and mechanical hazards associated with mains-powered motion control equipment—please see the safety warnings below. The individual or group having overall responsibility for this equipment must ensure that operators are adequately trained.

Under no circumstances will the suppliers of the equipment be liable for any incidental, consequential or special damages of any kind whatsoever, including but not limited to lost profits arising from or in any way connected with the use of the equipment or this guide.

Warning: High-performance motion control equipment is capable of producing rapid movement and very high forces. Unexpected motion may occur especially during the development of controller programs. KEEP WELL CLEAR of any machinery driven by stepper or servo motors. Never touch any part of the equipment while it is in operation.

This product is sold as a motion control component to be installed in a complete system using good engineering practice. Care must be taken to ensure that the product is installed and used in a safe manner according to local safety laws and regulations. In particular, the product must be positioned such that no part is accessible while power may be applied.

This and other information from Parker Hannifin Corporation, its subsidiaries, and authorized distributors provides product or system options for further investigation by users having technical expertise. Before you select or use any product or system, it is important that you analyze all aspects of your application and review the information concerning the product in the current product catalog. The user, through its own analysis and testing, is solely responsible for making the final selection of the system and components and assuring that all performance, safety, and warning requirements of the application are met.

If the equipment is used in any manner that does not conform to the instructions given in this user guide, then the protection provided by the equipment may be impaired.

The information in this user guide, including any apparatus, methods, techniques, and concepts described herein, are the proprietary property of Parker Hannifin or its licensors, and may not be copied disclosed, or used for any purpose not expressly authorized by the owner thereof.

Since Parker Hannifin constantly strives to improve all of its products, we reserve the right to modify equipment and user guides without prior notice. No part of this user guide may be reproduced in any form without the prior consent of Parker Hannifin.

Chapter 1

Product Specification

1.1 Part Numbering

1.2 Product Dimension

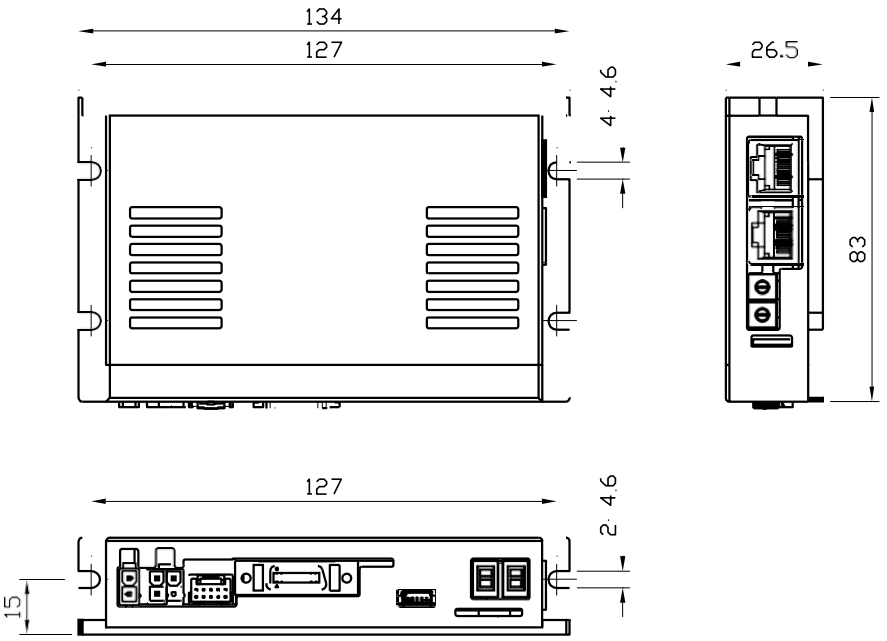

Figure 1.3: Dimensions

1.3 EtherCAT Specifications

Type of Communiation	EtherCAT
Physical Layer	Ethernet - 100BASE-TX
Connector	RJ45 (shielded) ECAT IN : EtherCAT Input ECAT OUT : EtherCAT Output
ECAT Device ID	Set Configured Station Alias by ECAT ID Switch : 1 ～ 99 Set Physical Address at Master : 1 ～ 65535
Topology	Line Tree, Star (When use Switch hub)
Support Protocol	CoE (CANopen application protocol over EtherCAT) FoE (File Access over EtherCAT)
Control Profile	CiA 402 drive profile (IEC61800-7)
Supported Operation Mode	Cyclic Synchronous Position Mode Profile Position Mode Homing Mode
Processing Data	Fixed PDO Mapping (1600h, 1A00h) Configurable PDO Mapping (1601h, 1A01h) Support Module Function

Table 1.1: Communication Specification

1.4 Drive Specification

Input Voltage		24VDC ±10%
Control Method		32bit ARM based Closed-loop Control
Current Consumption		500 mA (Except Motor Current)
Operating Condition	Ambient Temperature	In Use : 0 ～55℃ In Storage : -27 ～ 70℃
	Humidity	In Use : 35 ～ 85%RH In Storage : 10 ～ 90%RH
	Vib. Resist.	0.5G
Function	Rotation Speed	0 ～3,000 rpm
	Resolution	200 ～20,000 pulse (Resolution setting by Object)
	Protection Function	Over current, Over Speed, Step out, Position Tracking Error, Over load, Over Temperature, Over regenerated voltage, Motor connect error, En- coder connect error, Motor voltage error, In-Position error, System error, ROM error, Input voltage error, Position overflow error
	LED Display	Power status, In-Position status, Servo On status, Alarm status
I/O Signal	Input Signal	3 dedicated input (Limit+, Limit-, Origin) 7 user input
	Output Signal	1 dedicated output (Brake) 6 user output

Table 1.2: Drive Specification

Chapter 2 Installation

2.1 Precautions of Installation

1. This product designed for indoor usage and the ambient temperature of the room should be 0 ~ 55℃.
2. If temperature of the case is 50℃, radiate the outside to cool down.
3. Do not install this product under direct rays or near magnetic or radioactive objects.
4. If more than 2 drives are installed in a line, keep the interval of at least 20mm or more vertically and 50mm or more horizontally.

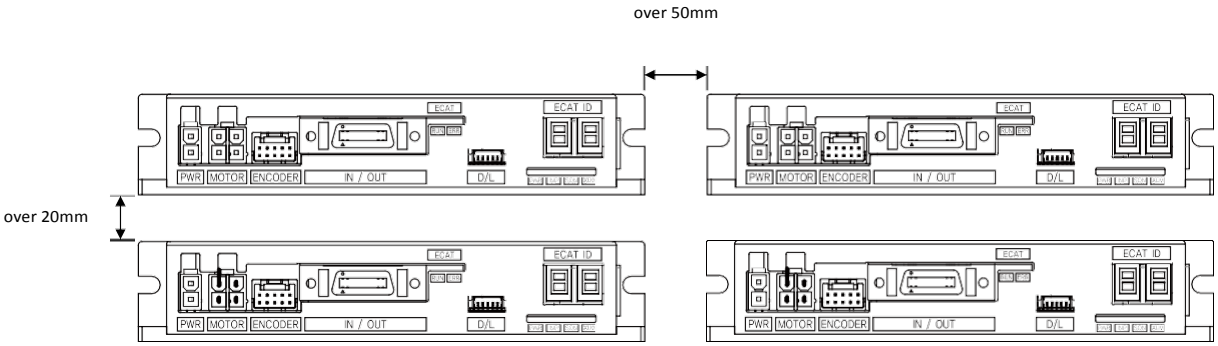

2.2 System Configuration

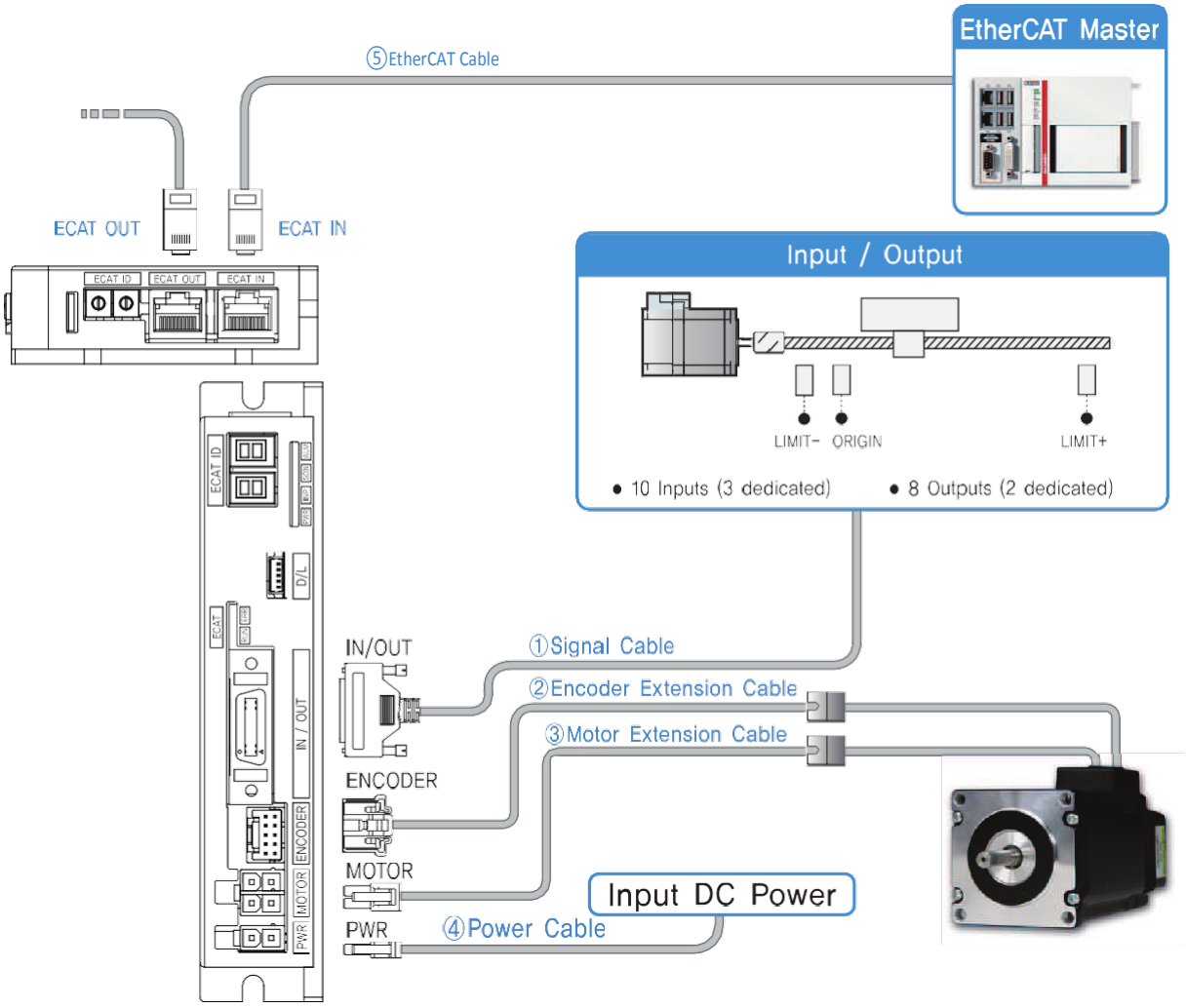

Figure 2.1: System Configuration Diagram

2.3 External Wiring Diagram

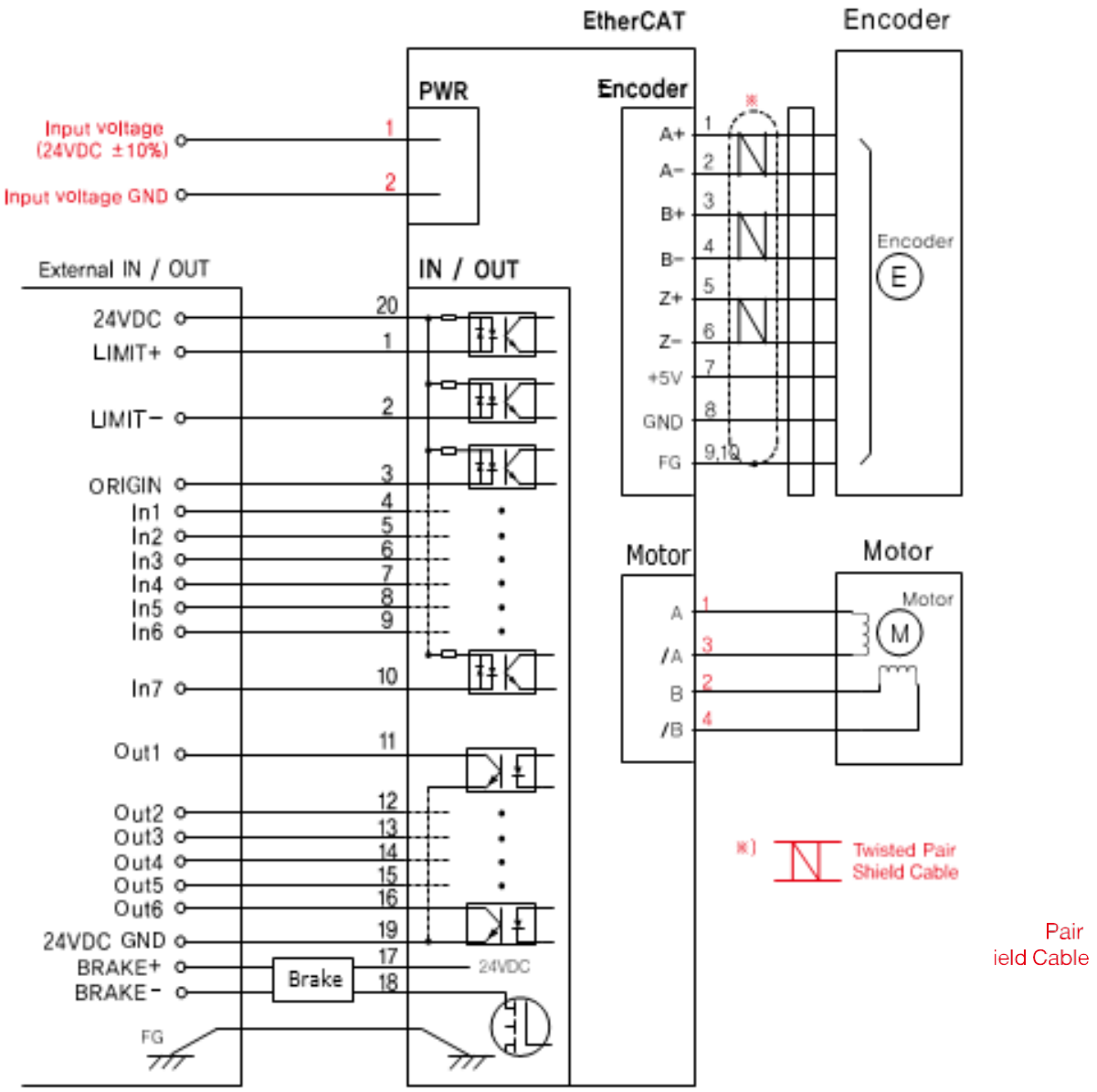

2.4 Appearance and Part Name

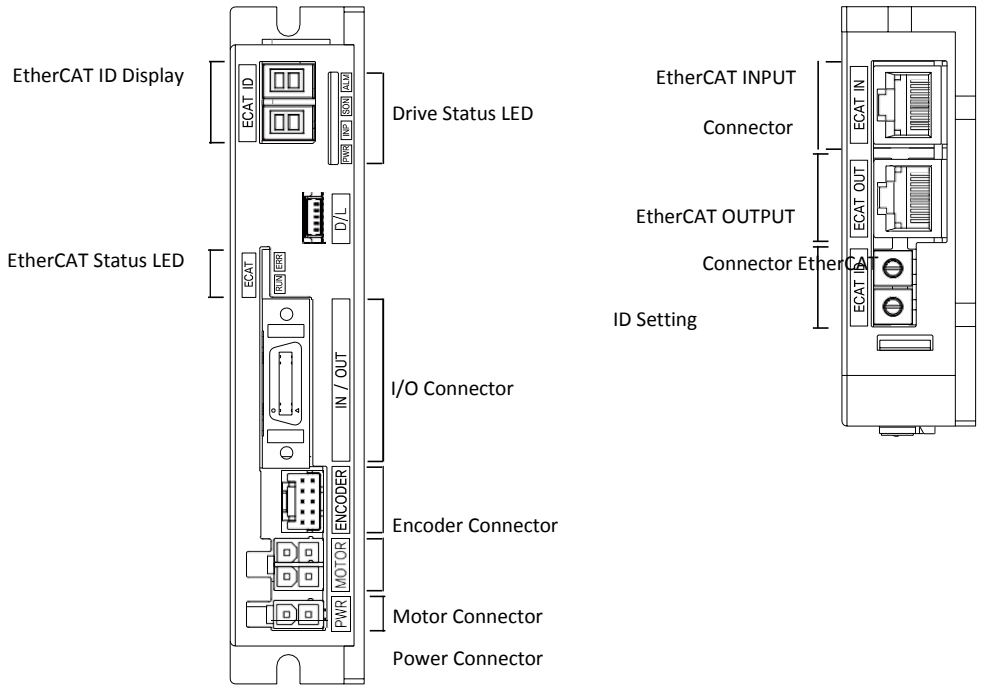

Figure 2.4: External Appearance

2.4.1 EtherCAT ID

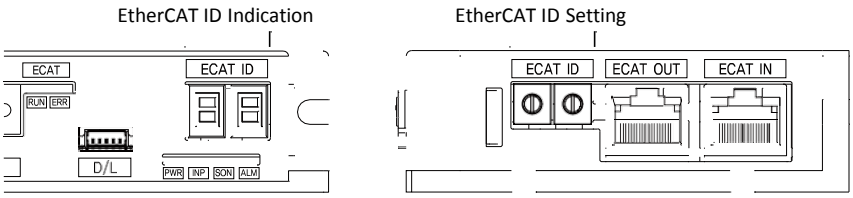

Figure 2.5: EtherCAT ID

ID Setting

Change EtherCAT ID (Configured Alias ID) value by Rotary switch setting. Right switch indicates tens and left switch indicates units.
Setting range is 0 ～99.

> **Information**
>
> ID value (Configured Alias ID) set by Rotary switch applies when power of controller turns on.

ID Indication

7-Segment indicates Physical Address or EtherCAT ID (EtherCAT configured Alias) value. Conditions for value indication as below.

- When Rotary Switch set all ‘0’, 7-Segment indicates EtherCAT Physical Address Value. Before Physical

Address assigned due to no connection between controller and master, It indicates 0. Once Master assigns each controllers physical address, it indicates relevant value.

- If Rotary switch set as not 0 but other value, 7-Segment indicates relevant set value (EtherCAT configured Alias).

- If 7-Segment of ID blinks, It indicates ID value as not applied yet. It can be applied once power turn on again.

Error value indication

If error generates from controller (Fault Status), 7-Segment indicates Error value instead of EtherCAT ID Value. Error value is 'E-000' types then 2 digits will be indicated at 7-Segment.

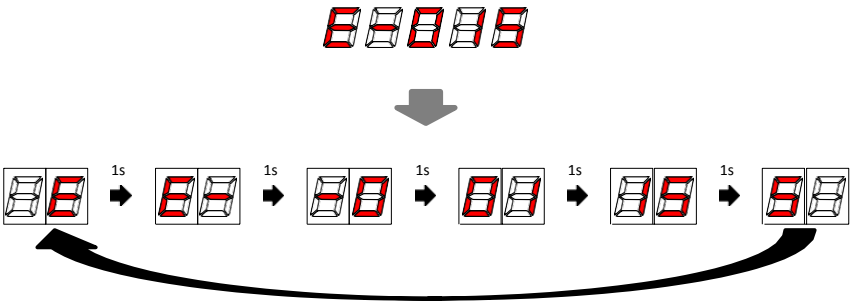

Figure 2.6: Error value indication (ex: E-015)

Please refer to 4.2 Error Code regarding indication value

2.4.2 EtherCAT Status Indication LED

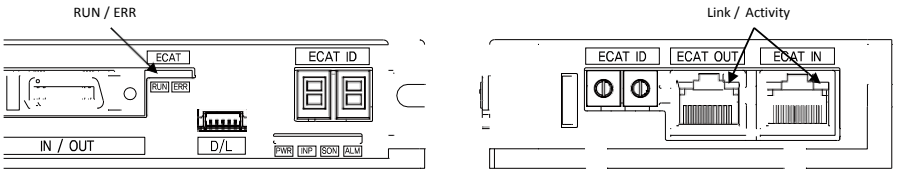

Figure 2.7: EtherCAT Status LED

This LED informs EtherCAT communication status. RUN LED, ERROR LED positions at the front side of product and, Link/Activity LED individually positions at the top of right corner of EtherCAT ports..

Name	Color	Status	Description
RUN	Green	OFF	INIT Status or Power OFF
		Blinking	PRE-OPERATIONAL Status
		Single Flash	SAFE-OPERATIONAL Status
		ON	OPERATIONAL Status
		Flickering	BOOTSTRAP Status
ERROR	Red	OFF	Non-error status or Power OFF
		Blinking	Extra Error
		Single Flash	Sync Error
		Double Flash	Watch-dog Error
Link/Activity	Green	OFF	Link not established in physical layer
		ON	Link established in physical layer
		Flickering	In operation after establishing link

Table 2.1: EtherCAT Status LED

Type of Status Indication

EtherCAT LED Status Indication shown as picture as below to check visually.

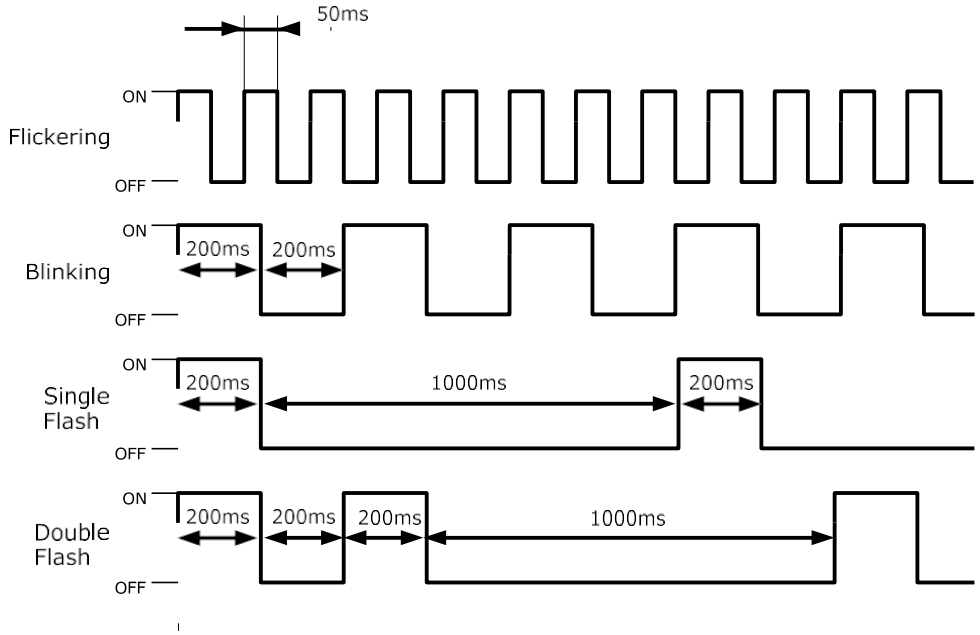

Figure 2.8: EtherCAT LED

2.4.3 EtherCAT Communication Connection

Connect communication cable from Master into communication connection ECAT IN. If there is next controller, connect communication cable from ECAT OUT to next controller of ECAT IN.

EtherCAT Communication Cable

Recommend to use communication cable Min. CAT5e level above.

- Above CAT5e
- Shield type : SF/FTP, S/FTP, SF/UTP
- Length : Max. 50m (Distance between Nodes)

2.4.4 I/O Connector

No.	Function	I/O
1	LIMIT+	Input
2	LIMIT-	Input
3	ORIGIN	Input
4	User Input 1	Input
5	User Input 2	Input
6	User Input 3	Input
7	User Input 4	Input
8	User Input 5	Input
9	User Input 6	Input
10	User Input 7	Input
11	User Output 1	Output
12	User Output 2	Output
13	User Output 3	Output
14	User Output 4	Output
15	User Output 5	Output
16	User Output 6	Output
17	BRAKE +	Output
18	BRAKE -	Output
19	24VDC GND	Input
20	24VDC	Input

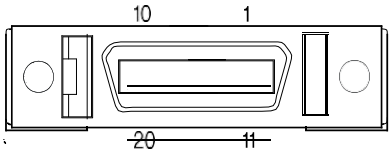

Table 2.2: I/O Connector

Input / Output signal connector (Type of connector: 3M 10226-52A2PL)
Input and output signals of the drive are all photo-coupler protected, the signal status of internal photo- couplers [ON:conduction], [OFF:Non-conduction], not displaying the voltage levels of the signal.

Limit and Origin input signal

Connect Limit sensor and origin sensor to IN/OUT Connector of LIMIT+, LIMIT-, ORIGIN Pin. LIMIT+ and LIMIT- sensor works to limit each axis of rotation range to CW and CCW direction, using for protection of mechanical collision or others. ORIGIN Sensor uses to assign origin of mechanisms.

Brake Signal Output Signal

Brake function prevents motor rotation under Servo OFF Status by BRAKE+ / BRAKE- pin of I/O Connector (2.2). 'BRAKE+' is for +24V esternally supplied to operat Brake circuit and 'BRAKE-' is output signal for actual motor control. Control signal automatically generates according to Servo ON/OFF status and Alarm generation. This output function can be only using under 200[mA]/DC24V of Brake current consumption.

Input Signal

This product provides 7 points of Inputs.
Please individually prepare Power for Input circuit as DC 24V 10%(Current consumption is around 5mA/Circuit)

Output Signal

This product provides 6 points of Outputs..
Please individually prepare Power Supply for Output circuit. Possible to share with power supply for input circuit and in this case, please add capacity of power supply for output into capacity of power supply for input. Supply voltage and capacity of power for control output connection as below.

- Less than 30V of supply voltage
- Less than 15mA of current flow

2.4.5 Encoder Connection Connector

No.	Function
1	A+
2	A-
3	B+
4	B-
5	Z+
6	Z-
7	5VDC
8	5VDC GND
9	Frame GND
10	Frame GND

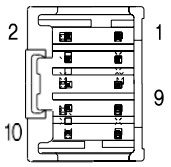

Table 2.3: Encoder Connection Connector

Encoder Connector (Type of Connector: Molex 55959-1030)

2.4.6 Motor Connection Connector

No.	Function
1	A Phase
2	B Phase
3	/A Phase
4	/B Phase

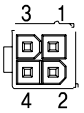

Table 2.4: Motor Connection Connector Motor

Connector (Type of Connector: Molex 5569-04A2)

2.4.7 Power Connection Connector

No.	Function
1	Input Voltage: 24VDC ± 10%
2	Input Voltage: GND

Table 2.5: Power Connection Connector

Power Supply Connector (Type of Connector: Molex 5569-02A2)

Chapter 3

EtherCAT Communication

.

3.1 CAN application protocol over EtherCAT

ECL EtherCATdrive utilizes EtherCAT communication embedded type of controller to support CAN application protocol over EtherCAT (CoE). EtherCAT Slave structure is as below.

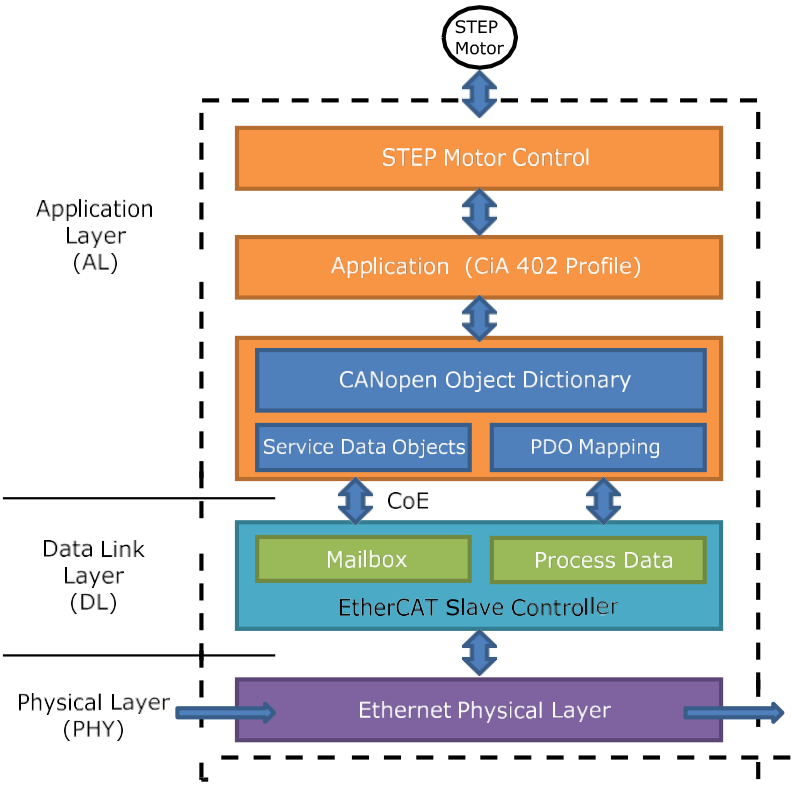

Figure 3.1: EtherCAT Structure

3.1.1 Object Dictionary

Object Dictionary is dictionary of Objects what product has.

3.1.2 Mailbox Communication

Master and Slave commands and receives Service Data Object (SDO) at Mailbox communication (SDO Communication). This communication method is the way of message transfer and master delivers com- mand and slave responses.
SDO Communication used for setting or confirmation of objects at Object Dictionary. This communica- tion can be used under Pre-Operation, Safe-Operation, Operation status of controller.

3.1.3 Process Data Communication

Process Data Communication (PDO Communication) commands and receives Process Data Objects (PDO) with Master periodically. Data that will be delivered and received is already defined at the initial stage of communication by PDO Mapping.
PDO communication is categorized as transmission PDO (following Tx PDO) delivers controller status information and Receipt PDO (following Rx PDO) delivers command from master.
This communication can be used under Operational status of controller and Tx PDO is only available for Safe-Operational.

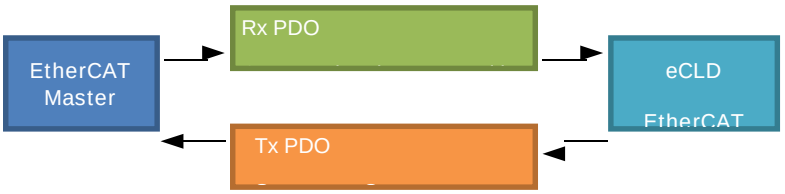

Figure 3.2: EtherCAT PDO Communication

3.2 PDO Mapping & Module

PDO Mapping is to set Application Object will be delivered and received by PDO communication.

3.2.1 PDO Mapping

Tx PDO Mapping information to be delivered to Master is to set at 1600h ~ 1601h Object and Rx PDO Mapping information to be received command from master is to set at 1A00h ~ 1A01h Object.
Object ID value, Low level Index value, length of data (bit unit) of data that will be delivered and received are recorded at Mapping Table.

RxPDO Mapping

PDO Map Object		Object Contents		
Index	Sub	Object	Sub	Size
0x1601	1	0x6040	0x00	0x10
0x1601	2	0x607A	0x00	0x20
0x1601	3	0x6081	0x00	0x20
0x1601	4	0x6060	0x00	0x08
0x1601	5	0x0000	0x00	0x00

RxPDO 1

Control Word	Target Position	Profile Velocity	Mode Of Operation

Application Object List

Object	Sub	Name
0x6040	0x00	Control Word
0x6060	0x00	Mode Of Operation
0x607A	0x00	Target Position
0x6081	0x00	Profile Velocity
0x0000	0x00	

Figure 3.3: PDO Mapping

3.2.2 PDO Assign

PDO Assign is to set PDO Mapping Object will be assigned at SyncManager.

SyncManager

PDO Assign Object

Index	Sub	Object
0x1C12	1	0x1600
0x1C13	1	0x1A00

PDO Mapping Object

Object	Name
0x1600	Rx PDO Map0
0x1601	Rx PDO Map1
…	
0x1A00	Rx PDO Map0
0x1A01	Rx PDO Map1

1C12h is object to assign Rx PDO and can assign one object among Rx PDO Object 1600h or 1601h. 1C13h is object to assign Tx PDO and can assign one object among Tx PDO Object 1A00h or 1A01h.

3.2.3 Module

With selection of Module, possible to set pre-assigned PDO Mapping and assign correspondent PDO Mapping at SyncManager.
Module provided from controller is as below.

Module Set	Name	Rx PDO Assign	Tx PDO Assign
119800h	csp - axis : Axis only supports csp	1600h	1A00h
219800h	Axis (Normal) : dynamic select operation mode	1601h	1A01h

'csp - axis' is Module for Cyclic synchronous Position Mode. Mode of operation is basically set as 8 and Synchronization selects DC Mode as a basic.
'Axis (Normal)' can freely select Mode. PDO Mapping can be modified according to requirements.

3.3 EtherCAT State Machine

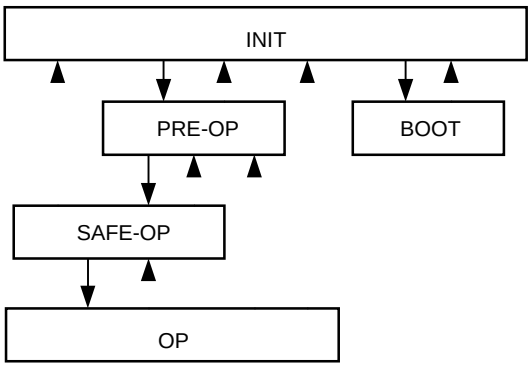

Figure 3.5: EtherCAT State Machine EtherCAT

controller of status motion is controlled by EtherCAT Master.

Status	SDO	Rx PDO	Tx PDO	Description
INIT	Non Available	Non Available	Non Available	EtherCAT communication is to reset. Status of communication is not available at this stage.
PRE-OP	Available	Non Available	Non Available	After initialization of communication, enters into this stage. Network setting is initialized. Only mailbox communication is available at this stage.
SAFE-OP	Available	Non Available	Available	Stage of Tx PDO communication is available.
OP	Available	Available	Available	All of communication is available.
BOOT	Available	Non Available	Non Available	Only mailbox communication is available. Possible to renew F/W of product with using FoE Protocol at this stage.

Table 3.1: EtherCAT Operational State

3.4 Synchronization

Synchronisation modes provided from controller are as below.

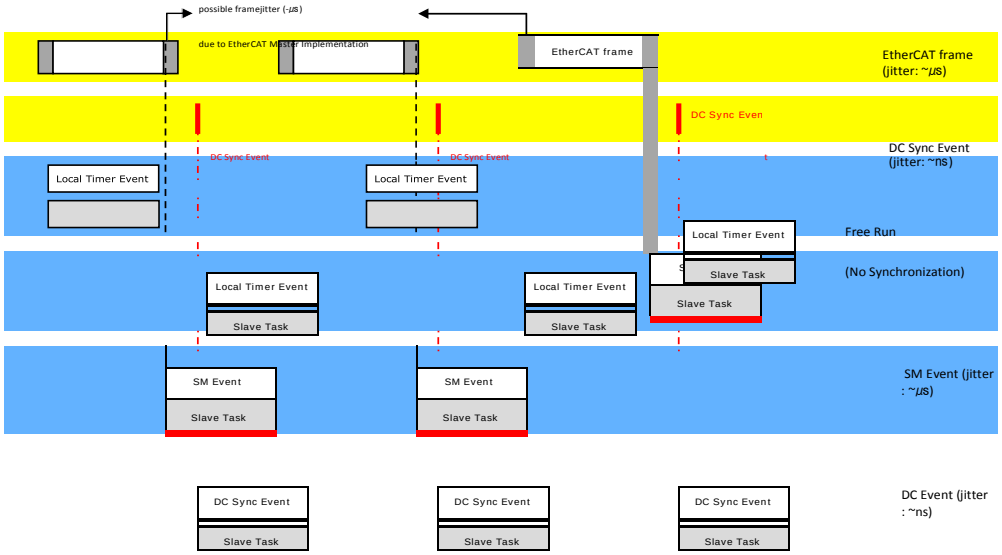

Figure 3.6: Type of EtherCAT Synchronization and Differences

3.4.1 Free Run

Controller runs under non-synchronisation with Master. Under Free Run mode, Master and Controller has an individual independent Cycle.

3.4.2 SM Event

Controller runs under synchronization with SM Event of EtherCAT communication. SM Event is gener- ated once controller receives EtherCAT Frame.
Once synchronization by SM Event, each one of controller has few us range of jitter.

3.4.3 DC Sync Event

Synchronized controller runs under Sync Interrupt is generated according to Distributed Clock (following DC).
DC is synchronized time shared between Master and Slave. With synchronized clock, interrupt is gener- ated under accurate synchronization and controller executes commands under accurate timing.
In this case, each one of controller has few us range of jitter.

3.5 EtherCAT Slave Information

EtherCAT Slave Information file (XML File) is needed to connect controller with EtherCAT Master. This file is described slave device information as XML format based on EtherCAT specifications. With recording of XML file into EtherCAT Master Equipment through EtherCAT setting equipment, easily implement PDO and SDO setting of Slavedevice.

Information

XML file can be downloaded from product website of archives.

Chapter 4

CiA 402 Drive Profile

.

4.1 Drive Status Control

Status of product moves as follows. Status movement is executed by status of controller and Control word (6040h) and current status can be checked by Status word (6041h).

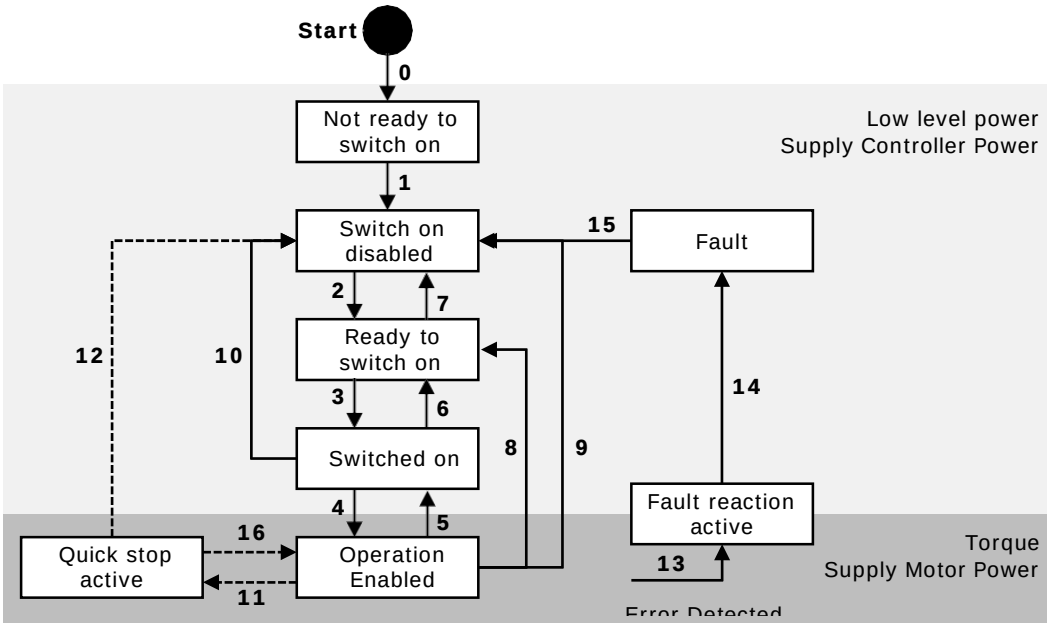

Figure 4.1: Power Drive System State Machine

Status movement and meaning of each status is as follows.

Transition	Event	Action
0	Automatic transition after power-on or reset application	Drive self-test and/or self initialisation shall be performed.
1	Automatic transition	Communication shall be activated
2	Shutdown command from control device	
3	Switch On command from control device	
4	Enable Operation command from control device	The drive function shall be enabled.
5	Disable Operation command from control device	The drive function shall be disabled, Motor power shall be switched off.
6	Shutdown command from control device	
7	Quick Stop or Disable Voltage command from control device	
8	Shutdown command from control device	The drive function shall be disabled, Motor power shall be switched off.
9	Disable Voltage command from control device	The drive function shall be disabled, Motor power shall be switched off.
10	Quick Stop or Disable Voltage command from control device	
11	Quick Stop command from control device	The quick stop function shall be started.
12	Automatic transition (depends on the Quick stop option code)	The drive function shall be disabled, Motor power shall be switched off.
13	Fault signal	the configured fault reaction function shall be executed.
14	Automatic transition	The drive function shall be disabled, Motor power shall be switched off.
15	Fault Reset command from control device	A reset of the fault condition is carried out.
16	Enable Operation command from control device (depends on the Quick stop option code)	The drive function shall be enabled.

Table 4.1: State transition

Each status of functions supported by controller as follows.

Status	Brake Function	Motor Power	Control Command
Not ready to switch on	Yes	No	No
Switch on disabled	Yes	No	No
Ready to switch on	Yes	No	No
Switched on	Yes	No	No
Operation enabled	Yes	Yes	Yes
Quick stop active	Yes	Yes	Yes
Fault reaction active	Yes	Yes	Yes
Fault	Yes	No	No

Table 4.2: Function per Status

Able to control the status of controller by 0 ~ 3, 7 bits of Control word and bits per target status are as follows.

Command	Bit of Control word					Transition
	Bit 7	Bit 3	Bit 2	Bit 1	Bit 0	
Shutdown	0	x	1	1	0	2, 6, 8
Switch on	0	0	1	1	1	3
Switch on + Enable operation	0	1	1	1	1	3 + 4
Disable voltage	0	x	x	0	x	7, 9, 10, 12
Quick stop	0	x	0	1	x	7, 10, 11
Disable Operation	0	0	1	1	1	5
Enable Operation	0	1	1	1	1	4, 16
Fault reset	$0 \rightarrow 1$	x	x	x	x	15

Table 4.3: Set Control word for status movement

If Quick stop option code (605Ah) of value is 5, 6, 7, 8 under Quick stop active status, waiting at correspondent status. Able to move to Operation Enabled status by 'Enable Operation' command of Control word.
Status word of values per each status are as follows.

Status word	Status
xxxx xxxx x0xx 0000b	Not ready to switch on
xxxx xxxx x1xx 0000b	Switch on disabled
xxxx xxxx x01x 0001b	Ready to switch on
xxxx xxxx x011 0011b	Switched on
xxxx xxxx x011 0111b	Operation enabled
xxxx xxxx x00x 0111b	Quick stop active
xxxx xxxx x0xx 1111b	Fault reaction active
xxxx xxxx x0xx 1000b	Fault

Table 4.4: Current status following by Status word

4.2 Error Code

Once Error generates at Controller (Sense Fault signal), changed to 'Fault reaction active' status. Under Fault / Fault reaction active status, types of error can be checked by Error code (603Fh).
Indicated Error codes are as follows

Error code Hex / Dec	External Indication[1]	Status	Description
0x7500 / 29952	E-500	EtherCAT Communication Error	Error generated at EtherCAT Communication.
0xFF01 / 65281	E-001	Over Current Error	The current through power devices in inverter exceeds the limit value.
0xFF02 / 65282	E-002	Over Speed Error	Motor speed exceed 3000[rpm].
0xFF03 / 65283	E-003	Position Tracking Error	Position error value is higher than set value (Following error window (6065h)).
0xFF04 / 65284	E-004	Over Load Error	The motor is continuously operated more than 5 second under a load exceeding the Max. torque of motor.
0xFF05 / 65285	E-005	Over Temperature Error	Inside temperature of drive exceeds 55℃.
0xFF06 / 65286	E-006	Over Regenerated Voltage Error	Motor Back-EMF is higher than limit value.
0xFF07 / 65287	E-007	Motor Connection Error	Abnormal connection between drive and motor.
0xFF08 / 65288	E-008	Encoder Connection Error	Abnormal connection between drive and encoder.
0xFF09 / 65289	E-009	Motor Voltage Error	Input voltage for motor is lower than limit value.
0xFF0A / 65290	E-010	In-position Error	After operation is finished, position error (over 1) generated more than 3 seconds.
0xFF0E / 65294	E-014	Input Voltage Error	Input voltage is exceeds setting value.
0xFF0F / 65295	E-015	Position Overflow Error	Position error value is higher than given value after completion of position movement command.
0xFF31 / 65329	E-049	Drive Alarm	Generated Extra alarms generated from drive.
0xFF32 / 65330	E-050	Internal communication error of drive	Communication error from internal components of drive generated.
0xFF33 / 65331	E-051	Torque enable Failure	Torque Enable command of drive failed.
0xFF3C / 65340	E-060	Torque enable Sense	Torque Enable response sensing of drive failed.
0xFF64 / 65380	E-100	ROM Initialization Error	EEPROM is blank status.
0xFF65 / 65381	E-101	ROM Initialization Error	Check sum of EEPROM is not matched.
0xFF6E / 65390	E-110	ROM Reading Error	Error generated during EEPROM reading.
0xFF79 / 65401	E-121	ROM Writing Error	Error generated during EEPROM writing.
0xFF7A / 65402	E-122	ROM Writing Error	Error generated during EEPROM writing.
0xFF7B / 65403	E-123	ROM Writing Error	Error generated during EEPROM writing.
0xFF7C / 65404	E-124	ROM Writing Error	Error generated during EEPROM writing.

Table 4.5: Error code Lists

[1]Two 7-Segment at the front side of product indicates Error code information.

4.3 Mode of Operation

Currently activated Mode of operation display (6061h) decides the action of controller. Meaning for some bits of Control word (6040h) and Status word (6041h) Objects can be decided by Mode of operation display (6061h). Able to set selected operation mode by Mode of operation (6060h). Currently activated operation mode can be checked by Mode of operation display (6061h).
Operation modes supported by current controller are as follows.

Mode of operation	Description
1	Profile Position Mode
6	Homing Mode
8	Cyclic Synchronous Position Mode

Table 4.6: Supported Operation Modes

4.4 Cyclic Synchronous Position Mode

4.4.1 Definition

Cyclic Synchronous Position mode(CSP Mode) assigns target position to controller by Master's operation profile creation function throughcyclic communication. Controller internally executes position / velocity control with receipt of target position in each cycle.
To use CSP Mode, Mode of operation (6060h) Cyclic Synchronous Position Mode needs to be set. Mode of operation display (6061h) is shown as Cyclic Synchronous Position Mode, Target position transmitted from master : Object 607Ah: Target position is executed.

4.4.2 Related Objects

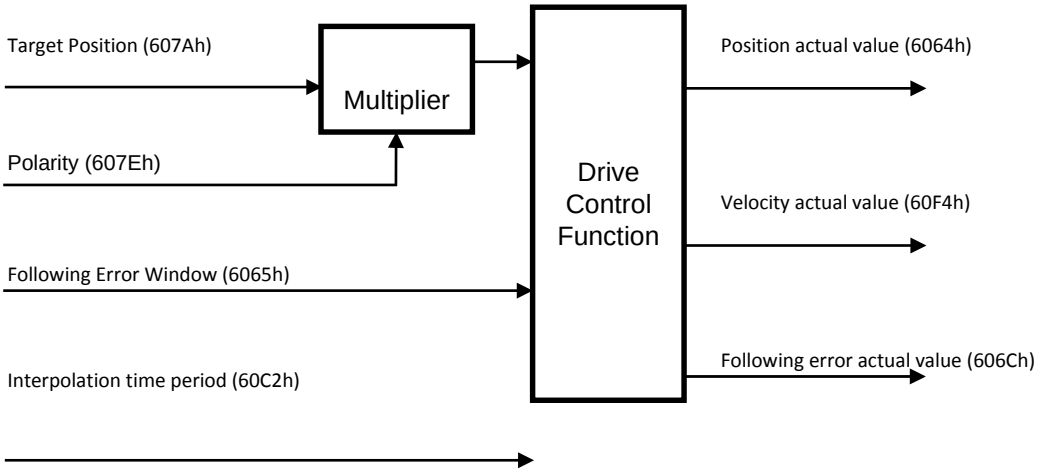

Figure 4.2: CSP Mode Objects

4.4.3 Control word and Status word

Control word under CSP Mode are as follows.

Bit	Name	Description
0	Switch On	
1	Enable Voltage	
2	Quick Stop	
3	Enable Operation	
4 ~ 15	Reserved	

Table 4.7: Control Word of CSP Mode Please

refer to 4.3 for the rest of bits.
Status word (6041h) under position control mode are as follows.

Bit	Name	Description
0	Ready to switch on	
1	Switched on	
2	Operation enabled	
3	Fault	
4	Voltage enabled	
5	Quick stop	
6	Switch on disabled	
7	Warning	
8	Reserved	
8	Remote	
10	reserved	
11	Internal Limit Active	
12	**Target position ignored**	Whether target position moved
13	**Following Error**	Following Error
14 ～15	Reserved	

Table 4.8: Status word of CSP Mode Please

refer to drive status control for the rest of bits.

Bit	Value	Description
10	0	Control Word of Halt(Bit 8) = 0: Not reached at the target position. Control Word of Halt(Bit 8) = 1: Stopping status of controller.
	1	Control Word of Halt(Bit 8) = 0: Reached at the target position. Control Word of Halt(Bit 8) = 1: Controller was stopped.

Table 4.9: Status word of Bit 10

Bit	Value	Description
12	0	Target position value ignored.
	1	Target position value executed.

Table 4.10: Status word of Bit 12

Bit	Value	Description
13	1	Following Error generated.

Table 4.11: Status word of Bit 13

4.5 Profile Position Mode

4.5.1 Definition

Position control mode is to move to target position of Target position (607Ah) object with receipt of Control word (6040h) input.
It is general Point to point operation. To use position control mode, need to set Profile Position Mode at Mode of operation (6060h).
Mode of operation display (6061h) is shown as Profile Position Mode, ready to use position control command.

4.5.2 Related Objects

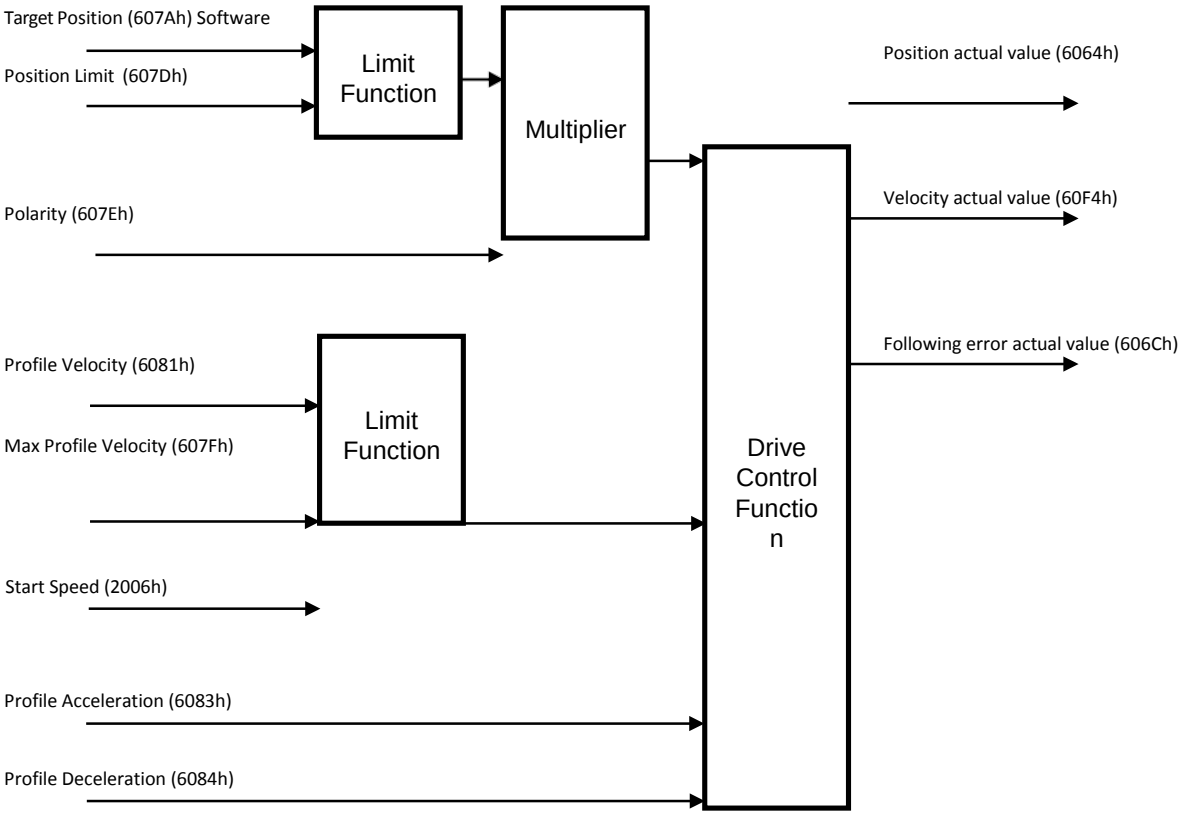

Figure 4.3: Profile Position Mode

4.5.3 Control word and Status word

Control word under position control mode are as follows.

Bit	Name	Description
0	Switch On	
1	Enable Voltage	
2	Quick Stop	
3	Enable Operation	
4	**New Set-Point**	Position movement command
5	**Change Set Immediately**	position change set
6	Relative **Fault**	
7	**Reset** Halt	Stop command
8		

9 ～15	Reserved	

Table 4.12: Profile Position Mode of Control Word

Please refer to 4.3 for the rest of bits.

Bit 5	Bit 4	Description
0	0 → 1	Execute position movement command after completion of previous command.
1	0 → 1	Execute position movement command with ignorance of previous position.

Table 4.13: Control Word of Bit 4, 5

Bit	Value	Description
6	0	Target position (607Ah) is absolute position.
	1	Target position (607Ah) is relative position.

Table 4.14: Control Word of Bit 6

Bit	Value	Description
8	1	Position movement command cancelled and stops according to set action at Halt option code (605Dh).

Table 4.15: Control Word of Bit 8 Status

word (6041h) under position control mode are as follows.

Bit	Name	Description
0	Ready to switch on	
1	Switched on	
2	Operation enabled	
3	Fault	
4	Voltage enabled	
5	Quick stop	
6	Switch on disabled	
7	Warning	
8	Reserved	
8	Remote	
10	**Target Reached**	Reached at target position
11	Internal Limit Active	
12	**Set-point Acknowledge**	'New Set-Point' Response
13	**Following Error**	Following Error
14 ~ 15	Reserved	

Table 4.16: Profile Position Mode of Status word Please

refer to drive status control for the rest of bits.

Bit	Value	Description
10	0	Control Word of Halt(Bit 8) = 0: Not reached at the target position. Control Word of Halt(Bit 8) = 1: Stop status of controller.
	1	Control Word of Halt(Bit 8) = 0: Reached at the target position. Control Word of Halt(Bit 8) = 1: Controller stops.

Table 4.17: Status word of Bit 10

Bit	Value	Description
12	0	Control Word of New Set-Point(Bit 4) has reset and previous position movement command processed. Able to input new position.
	1	Control word of New Set-Point(Bit 4) is already set or previous position movement command is under processing.

Table 4.18: Status word of Bit 12

Bit	Value	Description
13	1	Following Error generated.

Table 4.19: Status word of Bit 13

4.5.4 Position movement method

General Movement

Movement command to new target position can be requested by changing Control word (6040h) of New Set-Point (Bit 4) from RESET to SET. Once controller receives this request, Set-Point Acknowledge of Status word (Bit 12) is going to be SET and position movement command executed. Target position refers to Target position (607Ah) and Position value can be absolute coordinates or relative coordinates by Control word of Relative (Bit 6).

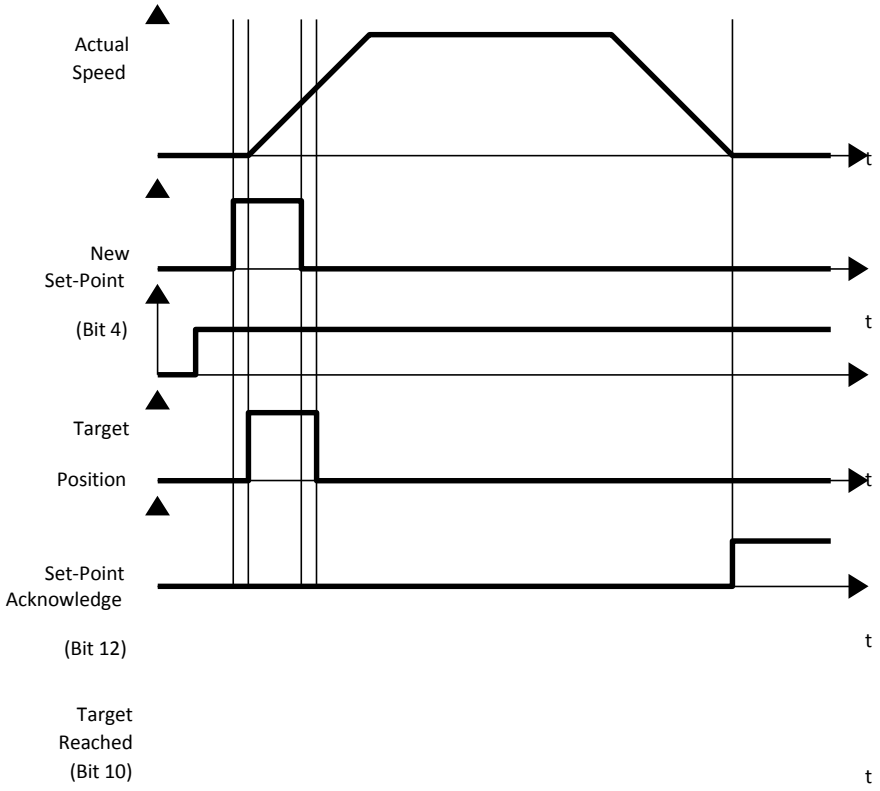

Figure 4.4: New Set-Point

Once reaches at target position, Status word of Target Reached (Bit 10) goes to SET. If it does not reach at target position due to error or status as below, Target Reached (Bit 10) can not be changed as SET.

- Fault status due to Error generation.
- Out of Operation Enabled Status.
- Stops during movement due to Limit Switch of operation direction goes to ON.
- Current position during movement goes out of Software Position Limit (607Dh).

Input next target position

Once commands to move to new target position during previous position movement still operates, executes new target position movement command after completion of previous position movement. So if already inputs next target position at buffer, position movement command can be executed immediately without time delay.

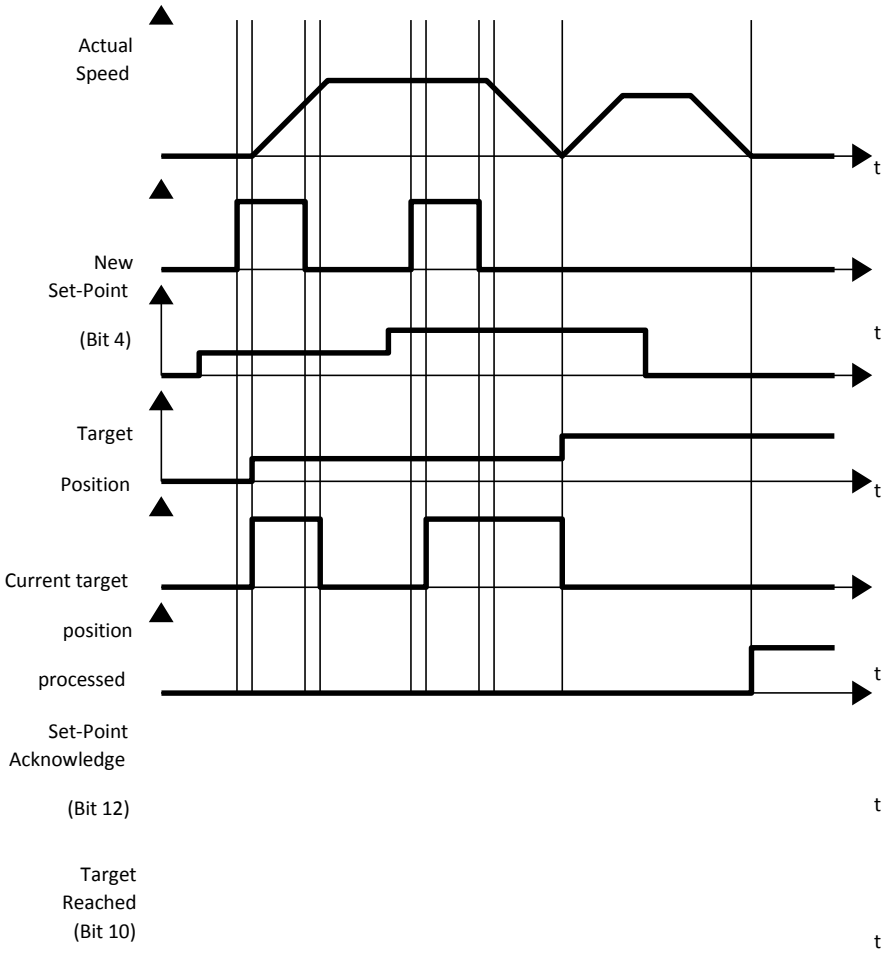

Figure 4.5: Next Set-Point

At this time, Status word of Set-Point Acknowledge (Bit 12) is going to be RESET of Control word of Ne Set-Point (Bit 4) and it goes to RESET after completion of previous position movement command. Target Reached (Bit 10) goes to SET once all of position movements completed.

Target position override

In case of using Control word of Change Set Immediately (Bit 5) under SET status during position movement command, able to cancel currently operating position movement command and immediately move to new target position.

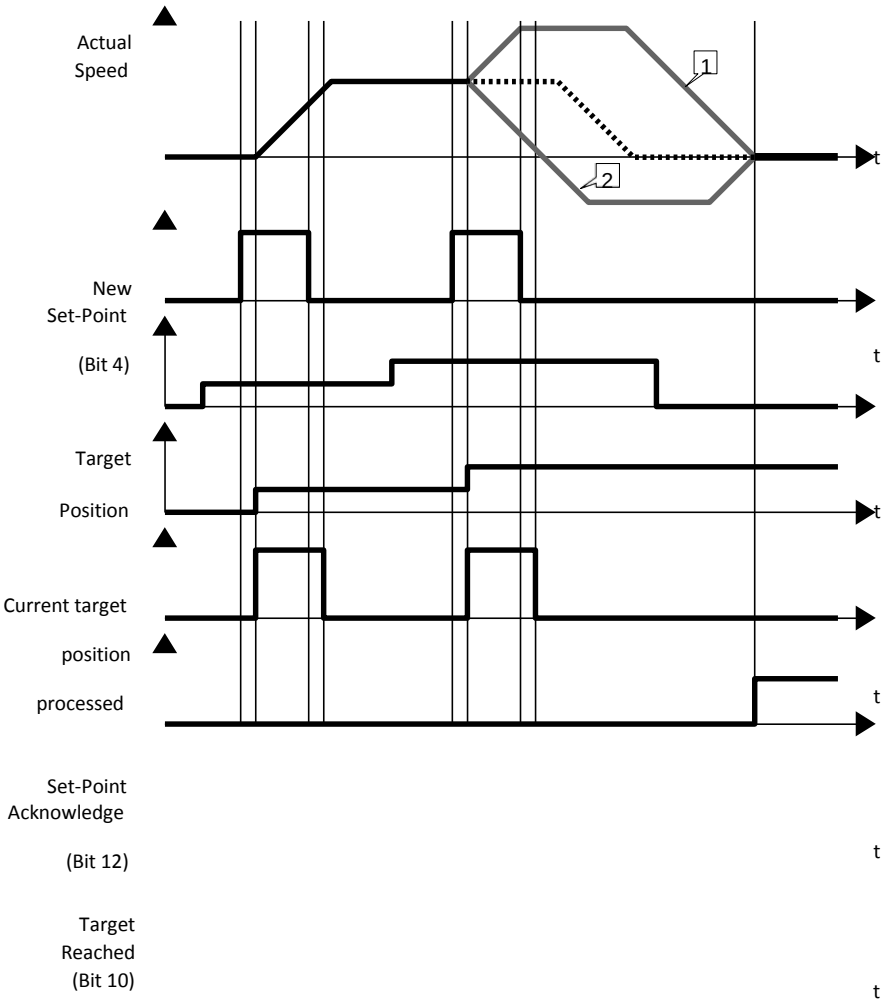

Figure 4.6: Change Set Immediately

1. If new target position is sufficiently ahead of previous target position, it will move to new target position passing by previous target position.
2. If new target position is behind of previous target position, it will be decelerated according to correspondent position and if need, it can stop and move to opposite direction.

If there is no previous position movement command or already completed, command under Change Set Immediately (Bit 5) under SET status is same as general position movement command.

4.6 Homing Mode

4.6.1 Definition

Origin search mode is the way of heading to origin with command of Control word (6040h). To use origin search mode, need to set Homing Mode at Mode of operation (6060h). Able to use origin search command once Mode of operation display (6061h) indicates Homing Mode.

4.6.2 Relative Objects

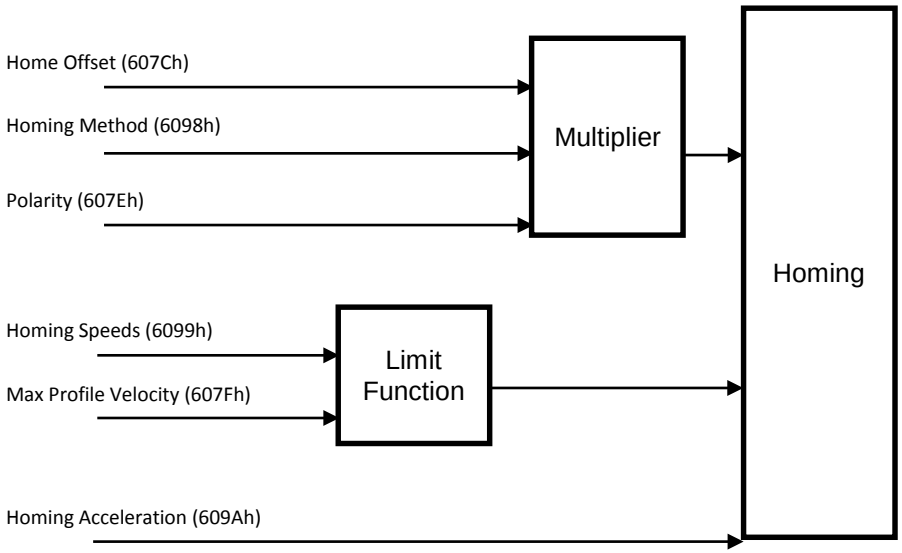

Figure 4.7: Homing Mode Objects

There are 4 kinds (Origin Switch, Positive Limit Switch, Negative Limit Switch, Index pulse of Encoder) switches to find out origin. And it can be differentiated by Homing Method (6098h). If it is not Homing method by Limit Switch, once Limit Switch goes ON during origin searching, it will move to opposite direction against movement direction. During motion towards opposite direction, if opposite side of Limit Switch goes ON, origin search goes failure. If Sensor origin and mechanical origin is different, able to set with using Home Offset (607Ch). Once position of mechanical origin is set to Home Offset, Status word
- bit 12: Home Attained is going to be ON and position objects will be initialized.

4.6.3 Control word and Status word

Control words at Homing Mode (Mode of operation display (6061h) = 6) are as follows.

Bit	Name	Description
0	Switch On	
1	Enable Voltage	
2	Quick Stop	
3	Enable Operation	
4	**Homing Operation Start**	Origin Search Command
	Reserved Fault	
5 ~ 6	Reset **Halt**	
7		Stop Command
8	Reserved	
9 ~ 15		

Table 4.20: Homing Mode of Control Word

Please refer to drive status control for the rest of bits.

Bit	Value	Description
4	0 → 1	Initiate origin search command.
8		Origin search command cancelled and stops according to set action at Halt option code (605Dh).

Table 4.21: Control Word of Bit 4, 8

Status word at Homing Mode are as follows.

Bit	Value	Description
0	Ready to switch on	
1	Switched on	
2	Operation enabled	
3	Fault	
4	Voltage enabled	
5	Quick stop	
6	Switch on disabled	
7	Warning	
8	Reserved	
8	Remote	
10	**Target Reached**	Origin search status
11	Internal Limit Active	
12	**Homing attained**	Origin search completed
13	**Homing Error**	Origin search failed
14 ~ 15	Reserved	

Table 4.22: Homing Mode of Status word

Please refer to drive status control for the rest of bits.

Bit 13	Bit 12	Bit 10	Description
0	0	0	Origin search operation is on-going.
0	0	1	Origin search operation cancelled or not started yet.
0	1	0	Origin has searched but controller is still under operation.
0	1	1	Origin search has successfully completed.
1	0	x	Origin search has failed. Controller stops.
1	1	x	Reserved

Table 4.23: Status word of bit 13, 12, 10

4.6.4 Origin Search Method

Origin search methods supported by this product are as follows.

Homing method	Name
1	Homing on Negative Limit Switch and Index Pulse
2	Homing on Positive Limit Switch and Index Pulse
7	Homing on Origin Switch (Positive Direction, Negative Edge) and Index Pulse
11	Homing on Origin Switch (Negative Direction, Positive Edge) and Index Pulse
17	Homing on Negative Limit Switch
18	Homing on Positive Limit Switch
24	Homing on Origin Switch (Positive Direction, Negative Edge)
28	Homing on Origin Switch (Negative Direction, Positive Edge)
33	Homing Index Pulse (Negative Direction)
34	Homing Index Pulse (Positive Direction)
35	Set the current position origin
36	reserved
37	Set the current position origin and reset current position
-3	Homing on Negative Limit touch
-4	Homing on Positive Limit touch and Index Pulse
-5	Homing on Negative Limit touch
-6	Homing on Positive Limit touch and Index Pulse

Table 4.24: Homing Method List

Supported origin searching method lists can be also checked from Supported homing methods (60E3h).

Method 1: Homing on Negative Limit Switch and Index Pulse

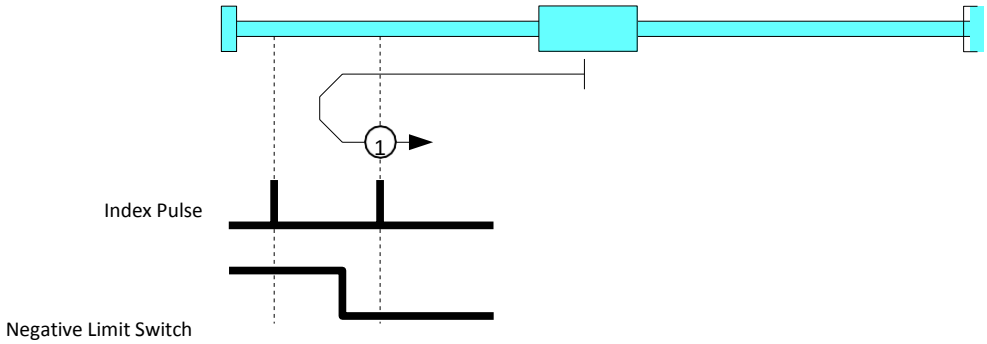

Figure 4.8: Homing Method 1

This origin methods is to start toward Negative Direction and movement velocity is the value of Speed during search for switch (6099h, index 01h). If Negative Limit Switch goes ON, it goes to opposite direction and moves by velocity of Speed during search for zero (6099h, index 02h). Index Pulse goes ON then stops and set correspondent position as sensor origin position.

Method 2: Homing on Positive Limit Switch and Index Pulse

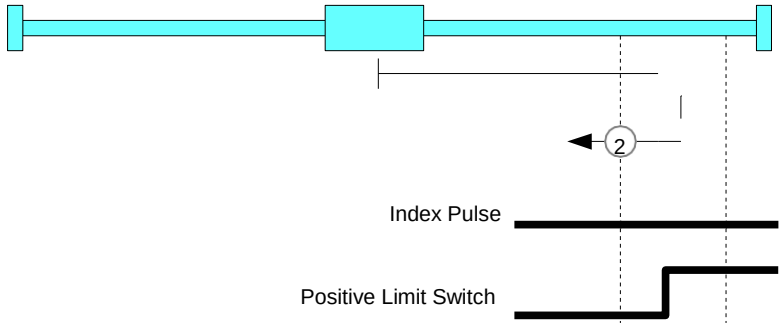

Figure 4.9: Homing Method 2

This origin methods is to start toward Positive Direction and movement velocity is the value of Speed during search for switch (6099h, index 01h). Positive Limit Switch goes ON, it goes to opposite direction and moves to opposite direction by velocity of Speed during search for zero (6099h, index 02h). Index Pulse goes ON then stops and set correspondent position as sensor origin position.

Method 7: Homing on Origin Switch (Positive Direction, Negative Edge) and Index Pulse

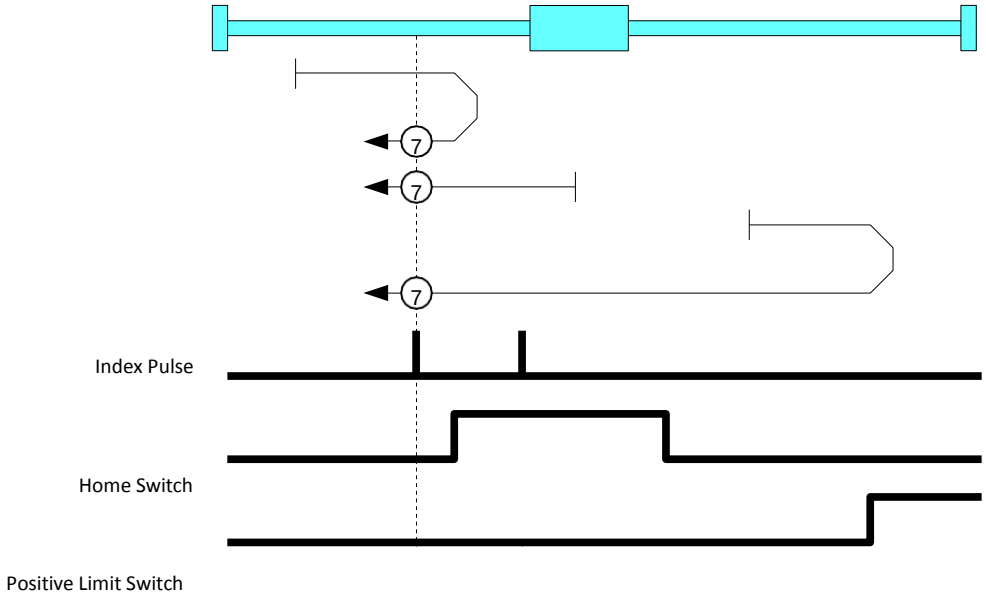

Figure 4.10: Homing Method 7

This origin methods is to start toward Positive Direction and movement velocity is the value of Speed during search for switch (6099h, index 01h). Positive Limit Switch goes ON, it goes to opposite direction and moves to opposite direction. Switch goes ON and moves by velocity of Speed during search for zero (6099h, index 02h). Index Pulse goes ON then stops and set correspondent position as sensor origin position.

Method 11: Homing on Origin Switch (Negative Direction, Positive Edge) and Index Pulse

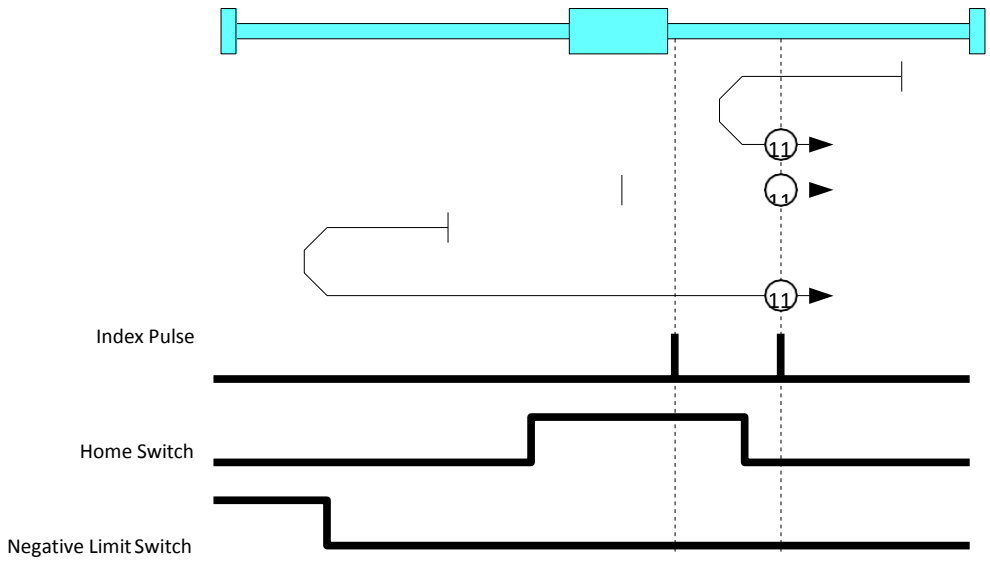

Figure 4.11: Homing Method 11

Initial movement direction of this origin search method is Negative Direction and movement velocity is the value of Speed during search for switch(6099h, index 01h). Negative Limit Switch goes ON, it goes to opposite direction. If Origin Switch goes ON, it goes to opposite direction and moves by velocity of Speed during search for zero (6099h, index 02h). Index Pulse goes ON then stops and set correspondent position as sensor origin position.

Method 17: Homing on Negative Limit Switch

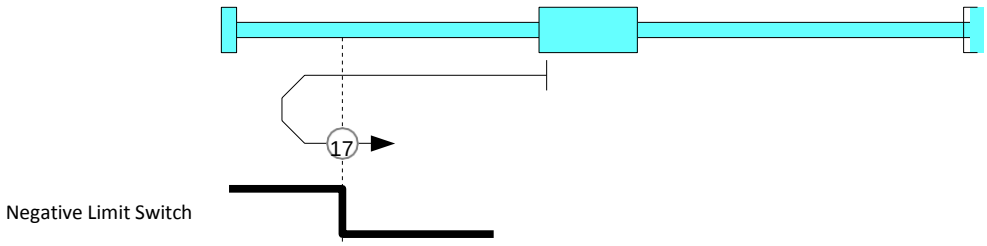

Figure 4.12: Homing Method 17

This origin search method goes for Negative Direction and movement velocity is the value of Speed during search for switch (6099h, index 01h). Negative Limit Switch goes ON, it goes to opposite direction by velocity of Speed during search for zero (6099h, index 02h). Limit Switch goes OFF then stops and set correspondent position as sensor origin position.

Method 18: Homing on Positive Limit Switch

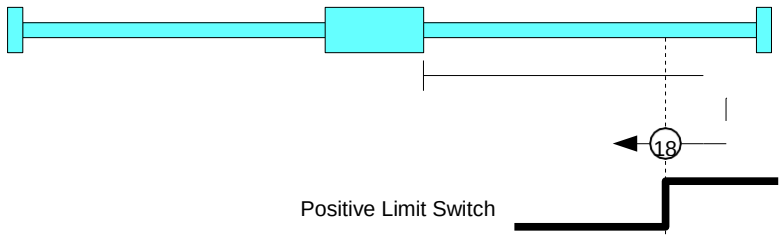

Figure 4.13: Homing Method 18

This origin method goes for Positive Direction and movement velocity of the value of Speed during search for switch (6099h, index 01h). Positive Limit Switch goes ON, it goes to opposite direction by velocity of Speed during search for zero (6099h, index 02h) Limit Switch goes OFF then stops and set correspondent position as sensor origin position.

Method 24: Homing on Origin Switch (Positive Direction, Negative Edge)

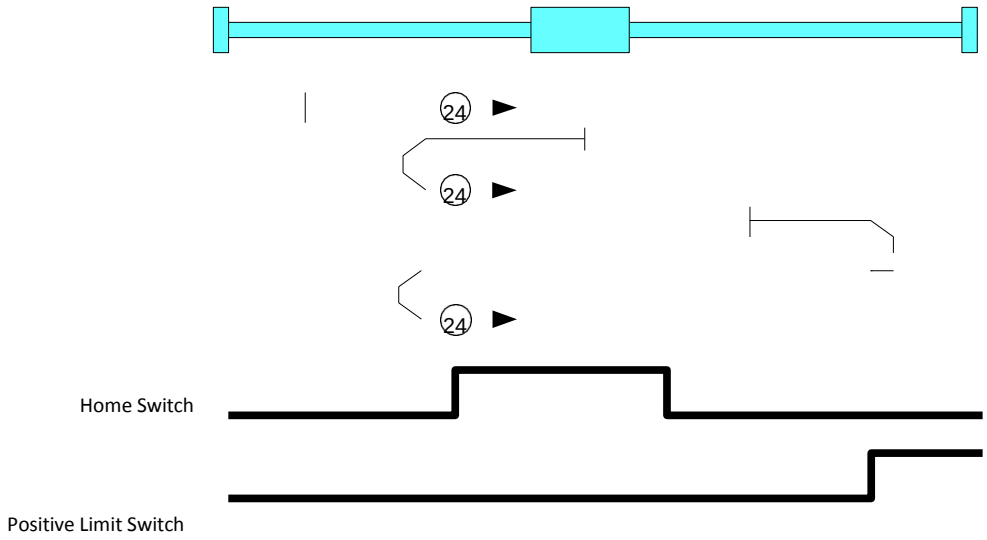

Figure 4.14: Homing Method 24

Initial movement direction of this origin search method is Positive Direction and movement velocity is the value of Speed during search for switch (6099h, index 01h). Positive Limit Switch goes ON, it goes to opposite direction by velocity of Speed during search for zero (6099h, index 02h) and get out of Origin Switch. If it gets out of Origin Switch, start to search origin by velocity of Speed during search for zero (6099h, index 02h) and stops when ON then set correspondent position as sensor origin position.

Method 28: Homing on Origin Switch (Negative Direction, Positive Edge)

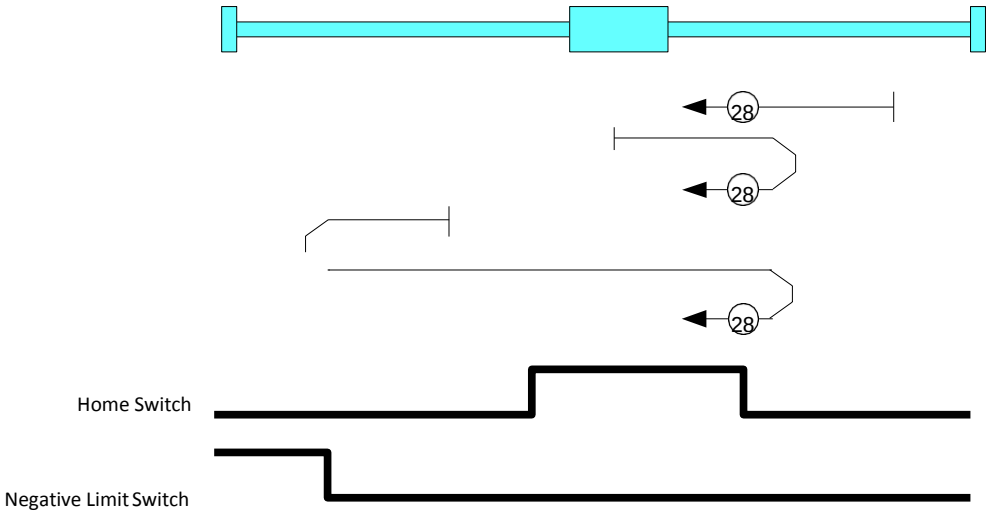

Figure 4.15: Homing Method 28

Initial movement direction of this origin search method is Negative Direction and movement velocity is the value of Speed during search for switch (6099h, index 01h). Negative Limit Switch goes ON, it goes to opposite direction. If Origin Switch goes ON, it goes out of Origin Switch toward opposite direction by velocity of Speed during search for zero (6099h, index 02h). If it gets out of Origin Switch, it searches Origin Switch again by velocity of Speed during search for zero (6099h, index 02h) , then stops when it goes ON then set correspondent position as sensor origin position.

Method 33, 34: Homing Index Pulse

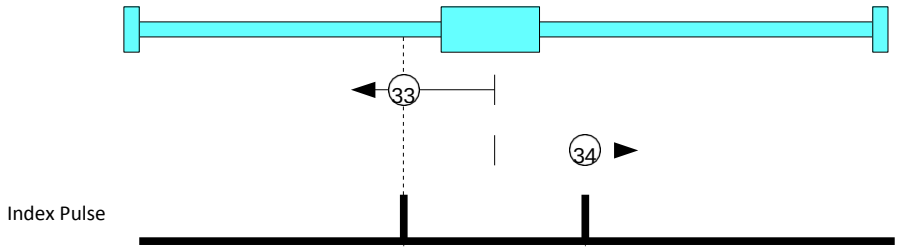

Figure 4.16: Homing Method 33

Origin search method 33 is to move from current position to Negative direction, 34 is moving to Positive Direction and movement velocity is Speed during search for zero (6099h, index 02h). Index Pulse goes ON then stops then set correspondent position as sensor origin position.

Method 35: Set the current position origin

This origin search method is to set current position as sensor origin position. If set value of Home offset (607Ch) is not 0, it moves to correspondent position.

Method 37: Set the current position origin and reset current position

This origin search method is to set current position as sensor origin position. If set value of Home offset (607Ch) is not 0, initialize current position as Home offset value.

Method -3: Homing on Negative Limit touch

This origin search method is to start toward Negative Direction and movement velocity is the value of Speed during search for zero (6099h, index 02h). If it sense certain Load then stops and set correspondent position as sensor origin position.

Method -4: Homing on Negative Limit touch and Index Pulse

This origin search method is to start toward Positive Direction and movement velocity is the value of Speed during search for zero (6099h, index 02h). If it sense certain Load then stops and moves to opposite direction and movement velocity is Speed during search for zero (6099h, index 02h). Index Pulse goes ON then stops and set correspondent position as sensor origin position.

Method -5: Homing on Positive Limit touch

This origin search method is to start toward Positive Direction and movement velocity is the value of Speed during search for zero (6099h, index 02h). If it sense certain Load then stops and set correspondent position as sensor origin position.

Method -6: Homing on Positive Limit touch and Index Pulse

This origin search method is to start toward Positive Direction and movement velocity is the value of Speed during search for zero (6099h, index 02h). If it sense certain Load then stops and moves to opposite direction and movement velocity is Speed during search for zero (6099h, index 02h). Index Pulse goes ON then stops and set correspondent position as sensor origin position.

4.7 Touch Probe

4.7.1 Definition

Touch probe function is to record current position with sensing inputs from external signal.

4.7.2 Related Objects

Object	Access	Description
Touch probe function	RW	Control Touch Probe 1/2.
Touch probe status	RO	Indicate status of Touch Probe 1/2.
Touch probe 1 positive value	RO	Indicate detected position of Rising edge of Touch Probe 1.
Touch probe 2 positive value	RO	Indicate detected position of Falling edge of Touch Probe 1.
Touch probe 1 negative value	RO	Indicate detected position of Rising edge of Touch Probe 2.
Touch probe 2 negative value	RO	Indicate detected position of Falling edge of Touch Probe 2.
Touch probe 1 positive edge counter	RO	Indicate detected frequency of Rising edge of Touch Probe 1.
Touch probe 2 positive edge counter	RO	Indicate detected frequency of Falling edge of Touch Probe 1.
Touch probe 1 negative edge counter	RO	Indicate detected frequency of Rising edge of Touch Probe 2.
Touch probe 2 negative edge counter	RO	Indicate detected frequency of Falling edge of Touch Probe 2.
Touch probe source	RO	Select input signal of Touch Probe 1/2.

Table 4.25: Touch Probe related Objects

4.7.3 Touch Probe Status and Control

Touch Probe Operation : Acknowledge initial signal

If Touch probe function of bit number 1, 9 has set as O, Touch probe only uses initially acknowledged signal after Enable.
Please refer to Timing chart as follow.

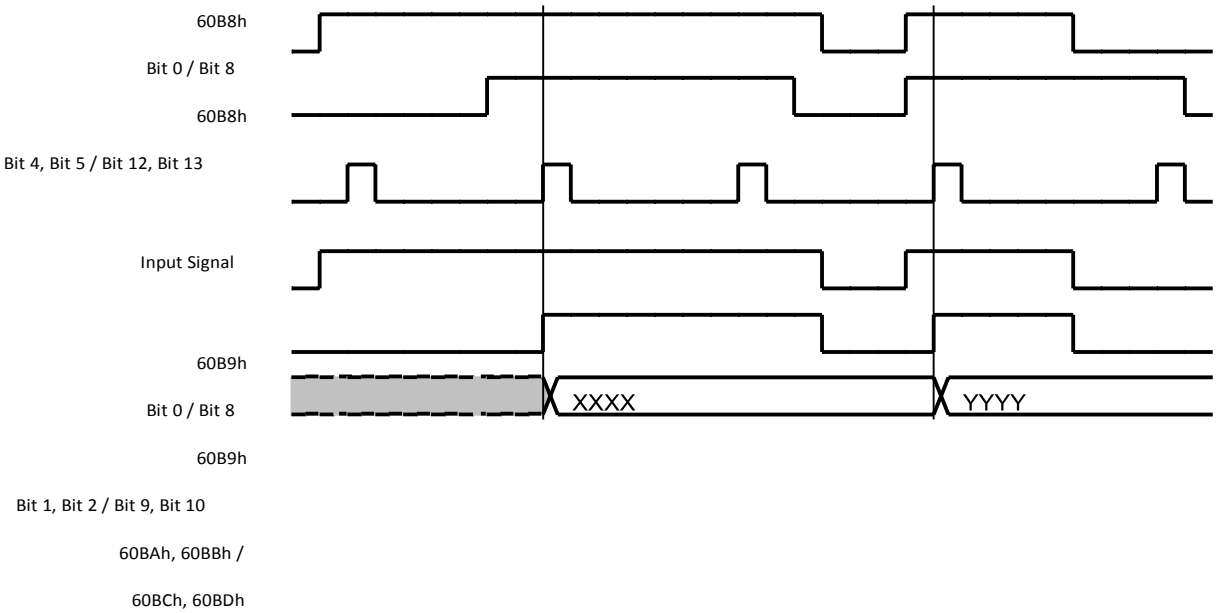

Figure 4.17: Touch Probe Operation (Bit 1 / Bit 9 = 0)

Able to check whether input signal acknowledged through Touch probe status of bit number 1 ~ 2, 9 ~ 10 (Detected).
Acknowledged position value, please check Touch probe 1 positive value, Touch probe 2 positive value, Touch probe 1 negative value, Touch probe 2 negative value.

Touch Probe Operation : Continuous signal acknowledgement

If Touch probe function of bit number 1, 9 has set as 1, Touch probe uses all acknowledged signals after Enable. Please refer to Timing chart as follows.

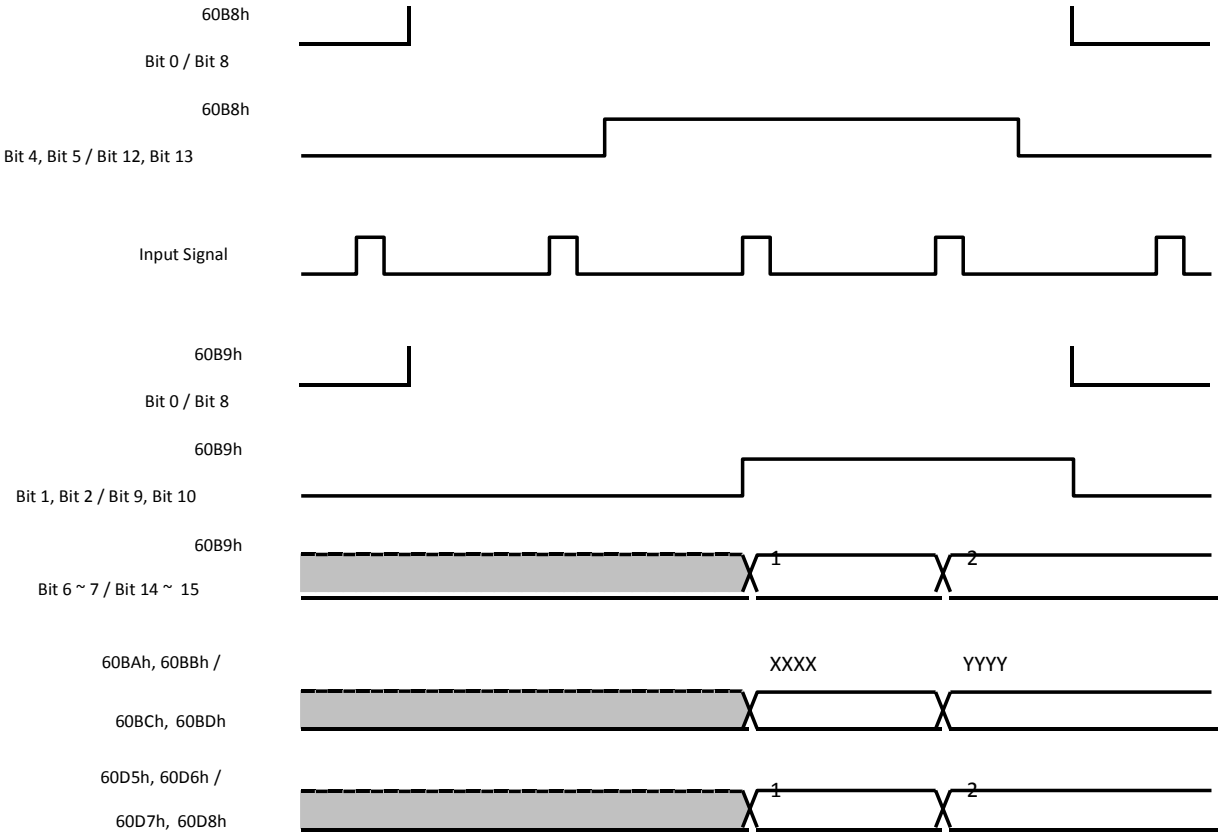

Figure 4.18: Touch Probe Operation (Bit 1 / Bit 9 = 1)

Touch probe status of bit number 6, 7, 14, 15 (Counter) value increases every single of input signal acknowledgement. (Range of this value is 0 3.)
For the frequency of input signal acknowledgement, please check Touch probe 1 positive edge counter, Touch probe 2 positive edge counter, Touch probe 1 negative edge counter, Touch probe 2 negative edge counter.

4.8 Digital Input and Output

4.8.1 Definition

ECL EtherCAT drive provides 3 default input (ORIGIN, LIMIT+, LIMIT-) and 7 user inputs and also 1 default output (BRAKE) and 6 user outputs.

4.8.2 Related Objects

Object	Access	Description
Digital inputs (60FDh)	RO	Indicates input signals.
Digital outputs (60FEh)	R/W	Set output signals.
Sensors logics (2001h)	R/W	Set Active Level of ORIGIN, LIMIT+, LIMIT- input signals.
Reverse limit direction (2002h)	R/W	Exchange LIMIT+ and LIMIT- input signals.
Digital input levels (2011h)	R/W	Active Level of user inputs.
Digital output levels (2012h)	R/W	Active Level of user outputs.
Brake delay (2010h)	R/W	Set Delay at BRAKE output.

Table 4.26: I/O related Objects

4.8.3 User I/O

Able to set Active Level of user I/O through Digital input levels, Digital output levels.
Following picture describes the relationship between Digital inputs and Digital input levels and Digital outputs and Digital output levels.

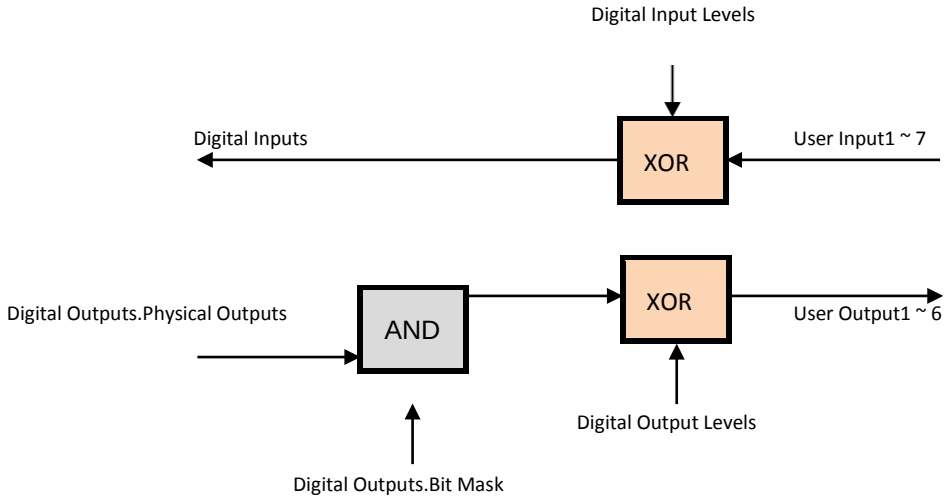

Figure 4.19: Digital I/O Level

4.8.4 ORIGIN and LIMIT Input

Active Level of ORIGIN and LIMIT input signal can be changed through Sensors logics (2001h) of Bit 0, 1. Please refer to Sensors logics.
LIMIT+ and LIMIT- input signals can be exchanged through Reverse limit direction (2002h).
Interrelation between Polarity (607Eh), Reverse limit direction (2002h) and LIMIT+, LIMIT- is as fol- lows.

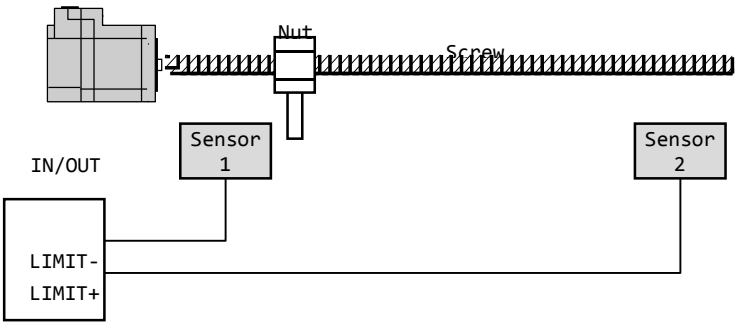

Polarity	Reverse Limit Direction	Motion Direction	Sensor 1 Detect	Sensor 2 Detect
00h	0	CW / →	Negative Limit	Positive Limit
	1	CW / →	Positive Limit	Negative Limit
80h	0	CCW / ←	Positive Limit	Negative Limit
	1	CCW / ←	Negative Limit	Positive Limit

Table 4.27: Relationship between Polarity and Limit Sensor

4.8.5 BRAKE Output

BRAKE output signal activates according to Operation Enabled of Status word (6041h). Timing of BRAKE ON can be set by Brake delay (2010h).

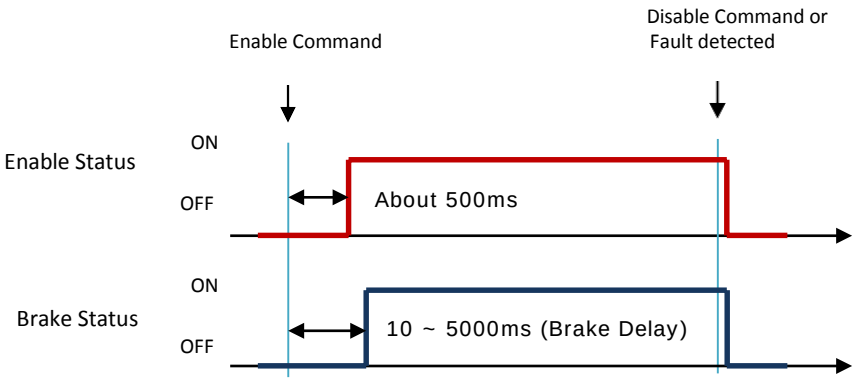

Figure 4.20: Brake Signal

BRAKE output can be manually released through Digital outputs (60FEh) Bit 0:Set Brake. For more detail information, please refer to 6.5.42 Object 60FEh: Digital outputs.

Chapter 5

Operataion

.

5.1 Operation Sequence

Sequence of controller operation is as follow. Exampled operation sequence of Profile Position Mode listed at the table as below..

Step	Name		Action
1	Setting	Installation	Install motor/controller according to conditions of installa- tion.
2		Wiring	Check power cable, motor/encoder cable, I/O cable, Ether- CAT communication cables are properly connected.
3		Input power	Turn power on. Check controller status.
4		PDO Mapping	Set Module/PDO Mapping.
5		Set communication status	Change EtherCAT State Machine as 'OP'
6	Operation	Control Drive Status	Set Control Word then change Drive State Machine to Op- eration Enabled.
7		Set Mode	Set Object 6060h: Mode of operation.
8		Set Operation	Input value into Object needed for execution of Motion.
9		Movement Command	Execute command by setting of Control word.
10		Check Status	Check the status of Motion execution.
11	Set Drive		Reset object if need.

5.2 Setting

5.2.1 Installation

Install motor/controller according to conditions of installation. Check operation in advance under unload status and recommend to connect Load. Please refer to 2.1 Precautions of Installation

5.2.2 Wiring

Check power cable, motor/encoder cable, I/O cable, EtherCAT communication cables are properly con- nected. Please refer to 2.2 System Configuration

5.2.3 Input Power

Turn power (24V DC) onto controller and check followings.

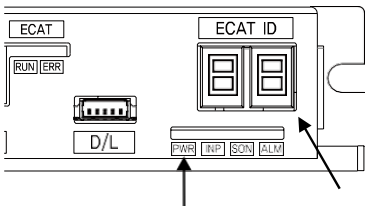

- Check Power LED (Red Color) of Drive status LED lights.
- Check 7-Segment indicates 0 or other value.

5.2.4 PDO Mapping

Set Module and PDO Mapping by setting function of Master.

Information

Trial operation explains operation by Profile Position Mode.
Select the Module: 'Axis (Normal) : dynamic select operation mode'.
Name of Module can be differentiated by each Master.

5.2.5 Set Communication Status

Change EtherCAT State Machine as 'OP' status by controlling Master.

- Check State Machine of Master can be changing to 'OP' status.
- Check State Machine of Controller can be changing to 'OP' status.

5.3 Operation

5.3.1 Drive Status Control

Change Drive State Machine as 'Operation Enabled' by setting of Control word (6040h).

- Check Status word (6041h) whether it can be changing to 'Operation Enabled'.
- In case of changing to 'Fault' status, check type of error by Error code (603Fh). Execute appropriate action according to type of error.

5.3.2 Set Mode

Set Mode of operation (6060h) according to operation mode will be used.

Information

Trial operation explains operation by Profile Position Mode.
Set Mode of operation (6060h) at 1.

- Check Mode of operation display (6061h) whether it has properly changed.

5.3.3 Set Operation

Set Objects according to Motion will be executed.

Information

Trial operation explains operation by Profile Position Mode.
Input 10000 at Target position (607Ah).
Input 1000 at Profile velocity (6081h).

5.3.4 Movement Command

Once setting of Motion related Object has completed, execute movement command by setting of Control word.

Information

Trial operation explains operation by Profile Position Mode.
Input 005Fh at Control word. This command is to rotate motor by setting value(distance) at Target position.

5.3.5 Check Statues

Check motor operates according to command or whether fault generated.

- Check motor achieves set operation visually.
- Check noise or abnormal vibration from motor during operation.
- After completion of motor operation, check Status word whether 'Target Reached' shown as 1.
- Check Status word whether 'Fault' shown as 1. If so, check Error code and execute appropriate action.

5.4 Drive Setting Adjustment

5.4.1 Change Rotation Direction

If rotation direction of motor goes opposite direction, set Polarity (607Eh) value then able to change rotation direction of motor.

Reverse limit direction

After changing Polarity, if LIMIT+, LIMIT- input signal acknowledgement reversed, able to change input value of 2 signals by setting the value of Reverse limit direction (2002h).
Regarding relationship between Reverse limit direction and Limit Sensors, please refer to 4.8.5 BRAKE Output.

5.4.2 Change I/O Signal Level

Limit+, Limit-, Origin Input Signal

If Active Level of Limit+, Limit-, Origin input signal has set different from actual connection, indication value of Actual signal input and Digital inputs can be different.
Reset Active Level of signals by setting the value of Sensors logics (2001h). Able to set Active Level of Origin signal by Sensors logics.

User I/O

Active Level of User I/O, User Input 1 ~ 7 and User Output 1 ~ 6 can be changing by Digital input levels (2011h) and Digital output levels (2012h).

Chapter 6

EtherCAT Object Dictionary

.

6.1 Indication Type of Objects

Following table explains indication type of information for each object.

Index	Sub index	Name	Type	Access	SAVE	PDO Mapping	Value Range	Default Value
60C2h	0	Number of entries	U8	RO	No	No		2
	1	Interpolation time period value	U8	RW	Yes	No	0 ～65535	2
	2	Interpolation time index	I8	RW	Yes	No	-4 ～1	-3

Object indicates default information as like Device name (1008h), it is indicated as following type.

Index	Sub index	Name	Type	Access	Constant Value
1008h	0	Device name	STR(18)	RO	ECLD

6.1.1 Index and Sub index

All object divides into 4 digits of hexadecimal index and configured as following field.

INDEX	Field	Description
0000h ～0FFFh	Data type area	Data type definitions
1000h ～1FFFh	Communication profile area	
2000h ～5FFFh	Manufacture specific area	
6000h ～9FFFh	Standardised Device Profile Area	CiA 402
A000h ～FFFFh	Reserved	Reserved

Table 6.1: Object INDEX

If various parameter cabined at the one object, able to access throughSub Index. Please refer to each object of Sub Index 0 : 'Number of entries' for Max. accessible sub index.

6.1.2 Name

Describes correspondent object.

6.1.3 Data Type

Parameter type of object is as follows.

Data Type	Length	Range
U8	1 byte	0 ～255
U16	2 byte	0 ～65535
U32	4 byte	0 ～4294967295
I8	1 byte	-128 ～127
I16	2 byte	-32768 ～32767
I32	4 byte	-2147483648 ～2147483647
BOOL	1 bit	0 ～1
STR(n)		Character string which length is n

Table 6.2: Data Type

6.1.4 Access

Property of each object is as following and describes authority to access each object.

Access	Description
RO	Read Only / Parameter only can be read.
RW	Read/Write / Parameter can be read or written.

Table 6.3: Access type of object

6.1.5 SAVE

Value of object can be saved at EEPROM through Store parameters (1010h).

6.1.6 PDO Mapping

Indicates object whether correspondent object can be mapping at PDO communication of EtherCAT.

PDO Type	Description
No	Object can not be mapping at PDO.
Tx PDO	Object can be mapping at Tx PDO.
Rx PDO	Object can be mapping at Rx PDO.

Table 6.4: PDO Mapping Description

6.1.7 Constant Value

Default value what correspondent object indicates. correspondent value can be differentially indicated by model or version of product.

6.1.8 Value Range

Value Range indicates input range of correspondent object. correspondent range can be indicated as any range or range of data type can be indicated.

6.1.9 Default Value

Indicates basic value of correspondent object. Can be initialized as a correspondent value when returns back to initial value through Restore default parameters (1011h).

6.2 Communication Object

6.2.1 Object 1000h: Device type

Index	Sub index	Name	Type	Access	Constant Value
1000h	0	Device type	U32	RO	0004 0192h

Object includes information of Device Type.

Bit	Name	Value	Description
0 ~15	Device Profile Number	0192h	CiA 402 Profile
16 ~23	Type	04h	Stepper Driver
24 ~31	Mode	00h	

Table 6.5: Device Type

6.2.2 Object 1001h: Error register

Index	Sub index	Name	Type	Access	SAVE	PDO Mapping	Value Range	Default Value
1001h	0	Error register	U8	RO	No	No		00h

This object indicates type of error generated from the controller.

Bit	Meaning
0	Generic error
1	Current error
2	Voltage error
3	Temperature error
4	Communication error
5	Device profile specific
6	Reserved
7	Manufacture specific

Table 6.6: Type of Error

correspondent bit can be set if correspondent error generated. 'General Error' always goes to be set once bit error generated.

6.2.3 Object 1008h: Device name

Index	Sub index	Name	Type	Access	Constant Value
1008h	0	Device name	STR(18)	RO	ECLD

This object indicates name of device.

Information

The value of Device name can be differentially indicated by product model.

6.2.4 Object 1009h: Hardware version

Index	Sub index	Name	Type	Access	Constant Value
1009h	0	Hardware version	STR(8)	RO	01.00.00

This object indicates version of product hardware. Indicated value can be different by version of product.

6.2.5 Object 100Ah: Software version

Index	Sub index	Name	Type	Access	Constant Value
100Ah	0	Software version	STR(8)	RO	01.00.00

This object indicates version of software. Indicated value can be different by version of product.

6.2.6 Object 1010h: Store parameters

Index	Sub index	Name	Type	Access	SAVE	PDO Mapping	Value Range	Default Value
1010h	0	Number of entries	U8	RO	No	No		1
	1	Store parameters	U32	RW	No	No		

Able to save all storable object into EEPROM throughthis object.
Need to input '65766173h' into sub-index 01h to store objects into EEPROM.

	MSB			LSB
ASCII	'e'	'v'	'a'	's'
Hex	65h	76h	61h	73h

Table 6.7: Definition of Save Parameters Value

If fails to store, SDO Communication returns 'Abort SDO Transfer (abort code: 0606 0000h)'. If inputs incorrect value, device does not store EEPROM and returns 'Abort SDO Transfer (abort code:0800 002xh)'.
When reads Sub-index 01h, following value will be returned.

Bit	Value	Description
0	1	Support save Parameter.
1 ~31	0	Reserved

Table 6.8: Save Parameters State

Check 'SAVE' part for each object.

6.2.7 Object 1011h: Restore default parameters

Index	Sub index	Name	Type	Access	SAVE	PDO Mapping	Value Range	Default Value
1011h	0	Number of entries	U8	RO	No	No		1
	1	Restore default parameters	U32	RW	No	No		

Restore objects value back to Default value to store into EEPROM.
Need to input '64616F6ch' into sub-index 01h to restore objects back to original setting value.

	MSB			LSB
ASCII	'd'	'a'	'o'	'l'
Hex	64h	61h	6Fh	6Ch

Table 6.9: Definition of Restore Parameters Value

If failed to initialize, SDO communication returns 'Abort SDO Transfer (abort code: 0606 0000h)'. If inputs incorrect value, device will not be initialized and return 'Abort SDO Transfer (abort code: 0800002xh)'.
In case of reading Sub-index 01h, following values will be returned.

Bit	Value	Description
0	1	Support Restore Default Parameter.
1 ～31	0	Reserved

Table 6.10: Restore Parameters State

6.2.8 Object 1018h: Identity

Index	Sub index	Name	Type	Access	Constant Value
1018h	0	Number of entries	U8	RO	4
	1	Vendor ID	U32	RO	0FA0 0000h
	2	Product code	U32	RO	0000 1001h
	3	Revision number	U32	RO	0000 0000h
	4	Serial number	U32	RO	0000 0000h

This object indicates information of device.

Information

Value for each item of Identity can be differentially indicated by product model and version.

6.2.9 Object 10F1h: Error settings

Index	Sub index	Name	Type	Access	SAVE	PDO Mapping	Value Range	Default Value
10F1h	0	Number of entries	U8	RO	No	No		2
	1	Local error reaction	U32	RO	No	No		0000 0000h
	2	Sync error counter limit	U32	RW	No	No		0000 0004h

6.3 PDO Mapping Object

6.3.1 Object 1600h: RxPDO-Map 0

Index	Sub index	Name	Type	Access	SAVE	PDO Mapping	Value Range	Default Value
1600h	0	Number of entries	U8	RW	No	No	0 ～10	2
	1	1st PDO object	U32	RW	Yes	No		6040 0010h
	2	2nd PDO object	U32	RW	Yes	No		607A 0020h
	3	3rd PDO object	U32	RW	Yes	No		0000 0000h
	4	4th PDO object	U32	RW	Yes	No		0000 0000h
	5	5th PDO object	U32	RW	Yes	No		0000 0000h
	6	6th PDO object	U32	RW	Yes	No		0000 0000h
	7	7th PDO object	U32	RW	Yes	No		0000 0000h
	8	8th PDO object	U32	RW	Yes	No		0000 0000h
	9	9th PDO object	U32	RW	Yes	No		0000 0000h
	10	10th PDO object	U32	RW	Yes	No		0000 0000h

This object points RxPD0 0 information among RxPD0 setting.
Following objects are basically mapping: Control word (6040h), Target position (607Ah) RxPDO-Map 0 is configurable. Please refer to 3.2 PDO Mapping & Module

6.3.2 Object 1601h: RxPDO-Map 1

Index	Sub index	Name	Type	Access	SAVE	PDO Mapping	Value Range	Default Value
1601h	0	Number of entries	U8	RW	No	No	0 ～10	10
	1	1st PDO object	U32	RW	Yes	No		6040 0010h
	2	2nd PDO object	U32	RW	Yes	No		607A 0020h
	3	3rd PDO object	U32	RW	Yes	No		6081 0020h
	4	4th PDO object	U32	RW	Yes	No		6060 0008h
	5	5th PDO object	U32	RW	Yes	No		0000 0000h
	6	6th PDO object	U32	RW	Yes	No		0000 0000h
	7	7th PDO object	U32	RW	Yes	No		0000 0000h
	8	8th PDO object	U32	RW	Yes	No		0000 0000h
	9	9th PDO object	U32	RW	Yes	No		0000 0000h
	10	10th PDO object	U32	RW	Yes	No		0000 0000h

This object points RxPD0 1 information among RxPD0 setting. RxPDO-Map 1 is configurable. Please refer to 3.2 PDO Mapping & Module.

6.3.3 Object 1A00h: TxPDO-Map 0

Index	Sub index	Name	Type	Access	SAVE	PDO Mapping	Value Range	Default Value
1A00h	0	Number of entries	U8	RW	No	No	0 ～10	2
	1	1st PDO object	U32	RW	Yes	No		6041 0010h
	2	2nd PDO object	U32	RW	Yes	No		6064 0020h
	3	3rd PDO object	U32	RW	Yes	No		0000 0000h
	4	4th PDO object	U32	RW	Yes	No		0000 0000h
	5	5th PDO object	U32	RW	Yes	No		0000 0000h
	6	6th PDO object	U32	RW	Yes	No		0000 0000h
	7	7th PDO object	U32	RW	Yes	No		0000 0000h
	8	8th PDO object	U32	RW	Yes	No		0000 0000h
	9	9th PDO object	U32	RW	Yes	No		0000 0000h
	10	10th PDO object	U32	RW	Yes	No		0000 0000h

This object points TxPD0 0 information among TxPD0 setting.

Following objects are already mapping: Status word (6041h), Position Actual Value (6064h) TxPDO-Map 0 is configurable. Please refer to 3.2 PDO Mapping & Module.

6.3.4 Object 1A01h: TxPDO-Map 1

Index	Sub index	Name	Type	Access	SAVE	PDO Mapping	Value Range	Default Value
1A01h	0	Number of entries	U8	RW	No	No	0 ～10	10
	1	1st PDO object	U32	RW	Yes	No		6041 0010h
	2	2nd PDO object	U32	RW	Yes	No		6064 0020h
	3	3rd PDO object	U32	RW	Yes	No		606C 0020h
	4	4th PDO object	U32	RW	Yes	No		6061 0008h
	5	5th PDO object	U32	RW	Yes	No		0000 0000h
	6	6th PDO object	U32	RW	Yes	No		0000 0000h
	7	7th PDO object	U32	RW	Yes	No		0000 0000h
	8	8th PDO object	U32	RW	Yes	No		0000 0000h
	9	9th PDO object	U32	RW	Yes	No		0000 0000h
	10	10th PDO object	U32	RW	Yes	No		0000 0000h

This object points TxPD0 1 information among TxPD0.
TxPDO-Map 1 is configurable. Please refer to 3.2 PDO Mapping & Module.

6.3.5 Object 1C12h: RxPDO assign

Index	Sub index	Name	Type	Access	SAVE	PDO Mapping	Value Range	Default Value
1C12h	0	Number of entries	U8	RO	No	No		1
	1	RxPDO assign	U16	RW	No	No		1600h

6.3.6 Object 1C13h: TxPDO assign

Index	Sub index	Name	Type	Access	SAVE	PDO Mapping	Value Range	Default Value
1C13h	0	Number of entries	U8	RO	No	No		1
	1	TxPDO assign	U16	RW	No	No		1A00h

6.4 Sync Manager Object

6.4.1 Object 1C00h: Sync manager type

Index	Sub index	Name	Type	Access	SAVE	PDO Mapping	Value Range	Default Value
1C00h	0	Number of entries	U8	RO	No	No		4
	1	SM0	U8	RO	No	No		01h
	2	SM1	U8	RO	No	No		02h
	3	SM2	U8	RO	No	No		03h
	4	SM3	U8	RO	No	No		04h

Sync Manager Type	Description
0	Mailbox Out
1	Mailbox In
2	PDO Output
3	PDO Input

Table 6.11: Sync Manager Type Value

6.4.2 Object 1C32h: SM output parameter

Index	Sub index	Name	Type	Access	SAVE	PDO Mapping	Value Range	Default Value
1C32h	0	Number of entries	U8	RO	No	No		32
	1	Synchronization type	U16	RW	No	No		0100h
	2	Cycle time	U32	RO	No	No		0000 0000h
	4	Synchronization type supported	U16	RO	No	No		0780h
	5	Minimum cycle time	U32	RO	No	No		0000 0000h
	6	Calc and copy time	U32	RO	No	No		0000 0000h
	8	Get cycle time	U16	RW	No	No		0000h
	9	Delay time	U32	RO	No	No		0000 0000h
	10	Sync0 cycle time	U32	RW	No	No		0000 0000h
	11	SM-Event missed	U16	RO	No	No		0000h
	12	Cycle time too small	U16	RO	No	No		0000h
	32	Sync error	BOOL	RO	No	No		0000h

6.4.3 Object 1C33h: SM input parameter

Index	Sub index	Name	Type	Access	SAVE	PDO Mapping	Value Range	Default Value
1C33h	0	Number of entries	U8	RO	No	No		32
	1	Synchronization type	U16	RW	No	No		2200h
	2	Cycle time	U32	RO	No	No		0000 0000h
	4	Synchronization type supported	U16	RO	No	No		0780h
	5	Minimum cycle time	U32	RO	No	No		0000 0000h
	6	Calc and copy time	U32	RO	No	No		0000 0000h
	8	Get cycle time	U16	RW	No	No		0000h
	9	Delay time	U32	RO	No	No		0000 0000h
	10	Sync0 cycle time	U32	RW	No	No		0000 0000h
	11	SM-Event missed	U16	RO	No	No		0000h
	12	Cycle time too small	U16	RO	No	No		0000h
	32	Sync error	BOOL	RO	No	No		0000h

6.5 Drive Profile Object

6.5.1 Object 603Fh: Error code

Index	Sub index	Name	Type	Access	SAVE	PDO Mapping	Value Range	Default Value
603Fh	0	Error code	U16	RW	No	Tx PDO		0

This object indicates latest error value generated from controller.
Please refer to 4.2 Error Code for the value of indicated value at Error code.

6.5.2 Object 6040h: Control word

Index	Sub index	Name	Type	Access	SAVE	PDO Mapping	Value Range	Default Value
6040h	0	Control word	U16	RW	No	Rx PDO		0

This object controls device status
Each bit of this object has a meaning as follows.

Bit	Name	Description
0	Switch On	Bits to control device status. Please refer to 4.1 Drive Status Control.
1	Enable Voltage	
2	Quick Stop	
4 ~ 6	Enable Operation	
7	Operation mode specific	
	Fault Reset	Initialize Fault status.
8	Halt	Cancel command and stop.
9	Operation mode specific	
10 ~ 15	reserved	

Table 6.12: Definition of Control word

Bit 4 ~ 6 and 10 ~ 15 can differentially be activated according to the value of Mode of operation display (6061h). For details, please refer to each profile description.

6.5.3 Object 6041h: Status word

Index	Sub index	Name	Type	Access	SAVE	PDO Mapping	Value Range	Default Value
6041h	0	Status word	U16	RO	No	Tx PDO		

This object indicates the status of controller. Each bit of this object has a meaning as follows.

Bit	Name	Description
0	Ready to switch on	Bits to indicate current status of controller. Please refer to 4.1 Drive Status Control.
1	Switched on	
2	Operation enabled	
3	Fault	
4	Voltage enabled	
5	Quick stop	
6	Switch on disabled	
7	Warning	Warning situation happens.
8	reserved	
9	Remote	Control word has settled
10	Target reached	Reached at target position.
11	Internal limit active	Software Limit has sensed from correspondent movement direction.
12 ~13	Operation mode specific	
14 ~15	reserved	

Table 6.13: Definition of Status word

Bit 12 ~ 13 can differentially be activated according to the value of Mode of operation display (6061h). For details, please refer to each profile description.
Current status can be checked throughnumber 0 ~6 bits according to controller.

Status word	Description
xxxx xxxx x0xx 0000b	Not ready to switch on
xxxx xxxx x1xx 0000b	Switch on disabled
xxxx xxxx x01x 0001b	Ready to switch on
xxxx xxxx x011 0011b	Switched on
xxxx xxxx x011 0111b	Operation enabled
xxxx xxxx x00x 0111b	Quick stop active
xxxx xxxx x0xx 1111b	Fault reaction active
xxxx xxxx x0xx 1000b	Fault

Table 6.14: Current status following by Status word

- Number 9 Remote bit indicates Control word has settled.
- Number 10 Target Reached bit indicates reached at target position. Meaning of target position can be different according to each mode of action and for details of meaning, please refer to Status word description of each operation mode. If Quick stop option code (605Ah) of value is 5 8, controller suddenly stops then Target Reached bit value goes to SET under immediate stop commands.
- Number 11 Internal Limit Active bit goes to SET once current position value is out of Software Position Limit (607Dh).
- Number 12 13 bits will has a different meaning according to operation mode. For details, please refer to Status word description of each operation mode.

6.5.4 Object 605Ah: Quick stop option code

Index	Sub index	Name	Type	Access	SAVE	PDO Mapping	Value Range	Default Value
605Ah	0	Quick stop option code	I16	RW	Yes	No		2

This object sets motion of immediate stop once controller status is Quick Stop.

Value	Description
0	Torque-Disable. Motor Free
1	After decelerated stop, changes to be 'switch On Disable' status. After
2	quick stop, changes to be 'Switch On Disable' status.

Table 6.15: Quick Stop Option Code

6.5.5 Object 605Bh: Shutdown option code

Index	Sub index	Name	Type	Access	SAVE	PDO Mapping	Value Range	Default Value
605Bh	0	Shutdown option code	I16	RW	Yes	No		0

This object is to set motion when controller goes Shutdown status.

Value	Description
0	Torque-Disable. Motor Free
1	After decelerated stop, disable Motor.

Table 6.16: Shutdown Option Code

6.5.6 Object 605Ch: Disable operation option code

Index	Sub index	Name	Type	Access	SAVE	PDO Mapping	Value Range	Default Value
605Ch	0	Disable operation option code	I16	RW	Yes	No		1

This object is to set operation in case of deactivated operation once controller goes Disable Operation status.

Value	Description
0	Torque-Disable. Motor Free
1	After decelerated stop, disable Motor.

Table 6.17: Disable Operation Option Code

6.5.7 Object 605Dh: Halt option code

Index	Sub index	Name	Type	Access	SAVE	PDO Mapping	Value Range	Default Value
605Dh	0	Halt option code	I16	RW	Yes	No		2

This object, Control word - bit 8: Set motion through Halt once stops command.

Value	Description
0	After decelerated stops, maintains Operation Enabled status.
1	After quick stops, maintain Operation Enabled status.

Table 6.18: Halt Option Code

6.5.8 Object 605Eh: Fault reaction option code

Index	Sub index	Name	Type	Access	SAVE	PDO Mapping	Value Range	Default Value
605Eh	0	Fault reaction option code	I16	RW	Yes	No		2

This object is to set operation once error occurs.

Value	Description
0	Torque-Disable. Motor Free
1	Decelerated stops.
2	Quick stops.

Table 6.19: Fault Reaction Option Code

6.5.9 Object 6060h: Mode of operation

Index	Sub index	Name	Type	Access	SAVE	PDO Mapping	Value Range	Default Value
6060h	0	Mode of operation	I8	RW	No	Rx PDO		0

This object is to set operation mode.

Value	Description
-128 ～-1	Reserved
0	Operation mode has not set. Profile
1	Position Mode.
2 ～5	Reserved Homing Mode. Reserved
6	
7	Cyclic Synchronous Position Mode.
8	Reserved
9 ～127	

Table 6.20: Mode of operation value

This object indicates operation mode currently requested. Actual operation mode is indicated at Mode of operation display (6061h).

6.5.10 Object 6061h: Mode of operation display

Index	Sub index	Name	Type	Access	SAVE	PDO Mapping	Value Range	Default Value

6061h	0	Mode of operation display	18	RO	No	Tx PDO		

This object indicates current operation mode. Definition of value is same as Mode of operation (6060h).

6.5.11 Object 6062h: Position demand value

Index	Sub index	Name	Type	Access	SAVE	PDO Mapping	Value Range	Default Value
6062h	0	Position demand value	I32	RO	No	Tx PDO		

This object indicates internal command position.
This position value is real time target position delivered from STEP Motor controller part to Motor.

6.5.12 Object 6064h: Position actual value

Index	Sub index	Name	Type	Access	SAVE	PDO Mapping	Value Range	Default Value
6064h	0	Position actual value	I32	RO	No	Tx PDO		

This object indicates current position.
This position value indicates Encoder value connected to controller.

6.5.13 Object 6065h: Following error window

Index	Sub index	Name	Type	Access	SAVE	PDO Mapping	Value Range	Default Value
6065h	0	Following error window	U32	RW	Yes	No		5000

Set the range of Follow Error Value.

6.5.14 Object 6067h: Position window

Index	Sub index	Name	Type	Access	SAVE	PDO Mapping	Value Range	Default Value
6067h	0	Position window	U32	RW	Yes	No	0 ～63	0

Set the range of Positioning value.

6.5.15 Object 606Ch: Velocity actual value

Index	Sub index	Name	Type	Access	SAVE	PDO Mapping	Value Range	Default Value
606Ch	0	Velocity actual value	I32	RO	No	Tx PDO		

This object indicates current velocity. Value of velocity can be indicated as +value once motor rotates toward +direction or -value once motor rotates toward -direction.

6.5.16 Object 607Ah: Target position

Index	Sub index	Name	Type	Access	SAVE	PDO Mapping	Value Range	Default Value
607Ah	0	Target position	I32	RW	No	Rx PDO	-2147483648 ～ 21474 83647	0

This object sets target position under Profile Position Mode, Cyclic Synchronous Position Mode.

6.5.17 Object 607Ch: Home offset

Index	Sub index	Name	Type	Access	SAVE	PDO Mapping	Value Range	Default Value
607Ch	0	Home offset	I32	RW	Yes	No	-2147483648 ~ 21474 83647	0

This object sets value of difference between sensor origin position and mechanical origin position. During origin search mode, completes origin search by set mode at Home Method then moves by Home Offset distance. If set value is over 0, move toward +direction and less than 0, move toward -direction.

6.5.18 Object 607Dh: Software position limit

Index	Sub index	Name	Type	Access	SAVE	PDO Mapping	Value Range	Default Value
607Dh	0	Number of entries	U8	RO	No	No		2
	1	Min position range limit	I32	RW	Yes	No	-2147483648 ~ 21474 83647	-2147483648
	2	Max position range limit	I32	RW	Yes	No	-2147483648 ~ 21474 83647	2147483647

Absolute position range where position objects can be positioned. Controller is unable to get out of this range. If needs to move position out of this range, target position can be adjusted within range and if current position currently is out of range, Status word of 'Internal Limit Active' Bit goes SET and unable to move to correspondent direction.
Software Position Limit is based on Sensor origin. If Home Offset has set by not 0 but other value, Actual Software Position Limit needs to be used after adjustment by Home Offset.
This object is unable to be operated under Cyclic Synchronous Position Mode.

Actual movable Min. position = Min Position Limit - Home Offset Actual movable Max. position = Max Position Limit - Home Offset

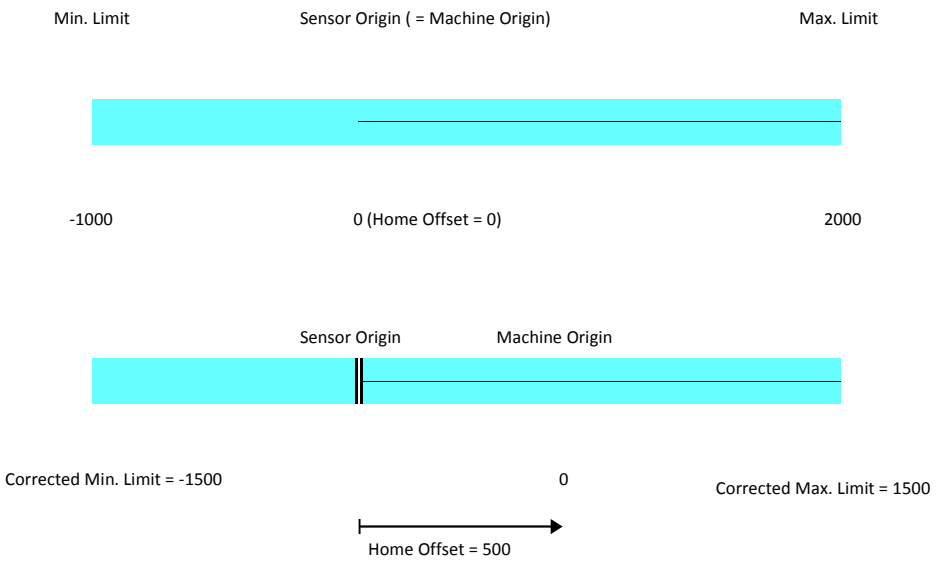

Figure 6.1: Origin Offset

6.5.19 Object 607Eh: Polarity

Index	Sub index	Name	Type	Access	SAVE	PDO Mapping	Value Range	Default Value
607Eh	0	Polarity	U8	RW	Yes	No		0

This object sets rotation direction of motor.

Bit	Description
0 ～6	Reserved Position Polarity

Table 6.21: Polarity Value

Position Polarity	Description
0	Multiply position related Object by 1.
1	Multiply position related Object by -1.

Table 6.22: Position Polarity

6.5.20 Object 607Fh: Max profile velocity

Index	Sub index	Name	Type	Access	SAVE	PDO Mapping	Value Range	Default Value
607Fh	0	Max profile velocity	U32	RW	Yes	No	1 ～2500000	2500000

This object sets Max. allowable velocity.
Whatever it receives value of velocity, controller does not move faster than Max Profile Velocity.

6.5.21 Object 6081h: Profile velocity

Index	Sub index	Name	Type	Access	SAVE	PDO Mapping	Value Range	Default Value
6081h	0	Profile velocity	U32	RW	Yes	Rx PDO	1 ～2500000	10000

This object sets movement velocity under Profile Position Mode.

6.5.22 Object 6083h: Profile acceleration

Index	Sub index	Name	Type	Access	SAVE	PDO Mapping	Value Range	Default Value
6083h	0	Profile acceleration	U32	RW	Yes	Rx PDO	1000 ～ 1000000000	1000000

This object sets acceleration under Profile Position Mode.
Unit is speed of increasing per second [pulse/s^2].

6.5.23 Object 6084h: Profile deceleration

Index	Sub index	Name	Type	Access	SAVE	PDO Mapping	Value Range	Default Value
6084h	0	Profile deceleration	U32	RW	Yes	Rx PDO	1000 ～ 1000000000	1000000

This object sets deceleration under Profile Position Mode. Unit is speed of increasing per second [pulse/s^2].

6.5.24 Object 6098h: Homing method

Index	Sub index	Name	Type	Access	SAVE	PDO Mapping	Value Range	Default Value
6098h	0	Homing method	I8	RW	Yes	No		0

This object sets the method of sensor origin search under Homing Mode.
Homing Mode method is as follow.

Value	Name
0	No Mode
1	Homing negative limit and index pulse
2	Homing positive limit and index pulse
7	Homing Origin sensor and index pulse (Positive direction)
11	Homing Origin sensor and index pulse (Negative direction)
17	Homing Negative limit
18	Homing Positive limit
23, 24	Homing Origin sensor (Positive direction)
27, 28	Homing Origin sensor (Negative direction)
33	Homing Index pulse (Negative direction)
34	Homing Index pulse (Positive direction)
35	Set the current position origin

Table 6.23: Origin Search Method

Please refer to origin search method for detail operation, direction and velocity of each Homing Method.

6.5.25 Object 6099h: Homing speeds

Index	Sub index	Name	Type	Access	SAVE	PDO Mapping	Value Range	Default Value
6099h	0	Number of entries	U8	RO	No	No		2
	1	Speed during search for switch	U32	RW	Yes	No	1 ～2500000	5000
	2	Speed during search for zero	U32	RW	Yes	No	1 ～500000	1000

This object sets values of velocity under Homing Mode.
Speed during search for switch (index 01h) is the velocity is used for correspondent Switch. Please set appropriate velocity to sense correspondent Switch.
Speed during search for zero (index 02h) is the velocity is used for searching sensor origin after searching correspondent Switch.

6.5.26 Object 609Ah: Homing acceleration

Index	Sub index	Name	Type	Access	SAVE	PDO Mapping	Value Range	Default Value
609Ah	0	Homing acceleration	U32	RW	Yes	No	1000 ～ 1000000000	100000

This object sets Acc/Dec velocity under Homing Mode. Unit is speed of increasing per second [pulse/s^2].

6.5.27 Object 60B8h: Touch probe function

Index	Sub index	Name	Type	Access	SAVE	PDO Mapping	Value Range	Default Value
60B8h	0	Touch probe function	U16	RW	No	Rx PDO		0

This object sets and controls Touch Probe 1/2 operation.

Bit	Value	Description
0	0	Turn off Touch probe 1 function.
	1	Turn on Touch probe 1 function.
1	0	Sense 1st signal only.
	1	Sense signal continuously.
2 ~3	0	Sense origin signal.
	1	Sense Z-Phase signal.
	2	Sense signal set at 60D0h.
	3	reserved
4	1	Sense rising edge of 1 signal.
5	1	Sense falling edge of 1 signal.
6 ~7	0	reserved
8	0	Turn off Touch probe 2 function.
	1	Turn on Touch probe 2 function.
9	0	Sense 1st signal only.
	1	Sense signal continuously.
10 ~11	0	Sense origin signal.
	1	Sense Z-Phase signal.
	2	Sense signal set at 60D0h.
	3	reserved
12	1	Sense rising edge of 1 signal.
13	1	Sense falling edge of 1 signal.
14 ~15	0	reserved

6.5.28 Object 60B9h: Touch probe status

Index	Sub index	Name	Type	Access	SAVE	PDO Mapping	Value Range	Default Value
60B9h	0	Touch probe status	U16	RO	No	Tx PDO		

This object indicates status of Touch Probe 1/2.

Bit	Value	Description
0	0	Halt status of Touch probe 1 function.
	1	Touch probe 1 function already turn on.
1	0	Rising edge of set signal has not sensed.
	1	Rising edge of set signal has sensed.
2	0	Falling edge of set signal has not sensed.
	1	Falling edge of set signal has sensed.
3 ~5	0	reserved
6 ~7	0 ~3	Indicates frequency of Touch probe 1 acknowledgement.
8	0	Halt status of Touch probe 2 function.
	1	Touch probe 2 function already turn on.
9	0	Rising edge of set signal has not sensed.
	1	Rising edge of set signal has sensed.
10	0	Falling edge of set signal has not sensed.
	1	Falling edge of set signal has sensed.
11 ~13	0	reserved
14 ~15	0 ~3	Indicates frequency of Touch probe 2 acknowledgement.

Table 6.24: Definition of Touch probe status

6.5.29 Object 60BAh: Touch probe 1 positive value

Index	Sub index	Name	Type	Access	SAVE	PDO Mapping	Value Range	Default Value
60BAh	0	Touch probe 1 positive value	I32	RO	No	Tx PDO		

This object indicates encoder position value sensed by Touch Probe 1 at rising edge.

6.5.30 Object 60BBh: Touch probe 1 negative value

Index	Sub index	Name	Type	Access	SAVE	PDO Mapping	Value Range	Default Value
60BBh	0	Touch probe 1 negative value	I32	RO	No	Tx PDO		

This object indicates encoder position value sensed by Touch Probe 1 at falling edge.

6.5.31 Object 60BCh: Touch probe 2 positive value

Index	Sub index	Name	Type	Access	SAVE	PDO Mapping	Value Range	Default Value
60BCh	0	Touch probe 2 positive value	I32	RO	No	Tx PDO		

This object indicates encoder position value sensed by Touch Probe 2 at rising edge.

6.5.32 Object 60BDh: Touch probe 2 negative value

Index	Sub index	Name	Type	Access	SAVE	PDO Mapping	Value Range	Default Value
60BDh	0	Touch probe 2 negative value	I32	RO	No	Tx PDO		

This object indicates encoder position value sensed by Touch Probe 2 at falling edge.

6.5.33 Object 60C2h: Interpolation time period

Index	Sub index	Name	Type	Access	SAVE	PDO Mapping	Value Range	Default Value
60C2h	0	Number of entries	U8	RO	No	No		2
	1	Interpolation time period value	U8	RW	Yes	No	0 ～65535	2
	2	Interpolation time index	I8	RW	Yes	No	-4 ～1	-3

This object indicates and sets cycle time using at synchronous control mode (for example : Cyclic synchronous Position Mode)

$$\text{cycle time} = \text{Interpolation time period value} \times 10^{\text{Interpolation time index}} \quad [\text{sec}]$$

Information

If uses DC mode for method of synchronization, cycle time ignores set value as above and automatically uses Sync0 cycle time.

6.5.34 Object 60D0h: Touch probe source

Index	Sub index	Name	Type	Access	SAVE	PDO Mapping	Value Range	Default Value
60D0h	0	Number of entries	U8	RO	No	No		2
	1	Touch probe 1 source	U8	RW	No	No		1
	2	Touch probe 2 source	U8	RW	No	No		1

If the value of Bit 2 ~ 3, 10 ~ 11 for Touch probe function (60B8h) as 2, uses input signal already set at this Object.

Value	Input Source
1	Origin Sensor
2	User Input 1
3	User Input 2
5	Z-Phase

Table 6.25: Touch probe 1 source

Value	Input Source
1	Origin Sensor
2	User Input 3
3	User Input 4
5	Z-Phase

Table 6.26: Touch probe 2 source

6.5.35 Object 60D5h: Touch probe 1 positive edge counter

Index	Sub index	Name	Type	Access	SAVE	PDO Mapping	Value Range	Default Value
60D5h	0	Touch probe 1 positive edge counter	U16	RO	No	Tx PDO		

This object indicates frequency for acknowledgement of Touch Probe 1 rising edge.

6.5.36 Object 60D6h: Touch probe 1 negative edge counter

Index	Sub index	Name	Type	Access	SAVE	PDO Mapping	Value Range	Default Value
60D6h	0	Touch probe 1 negative edge counter	U16	RO	No	Tx PDO		

This object indicates frequency for acknowledgement of Touch Probe 1 falling edge.

6.5.37 Object 60D7h: Touch probe 2 positive edge counter

Index	Sub index	Name	Type	Access	SAVE	PDO Mapping	Value Range	Default Value
60D7h	0	Touch probe 2 positive edge counter	U16	RO	No	Tx PDO		

This object indicates frequency for acknowledgement of Touch Probe 2 rising edge.

6.5.38 Object 60D8h: Touch probe 2 negative edge counter

Index	Sub index	Name	Type	Access	SAVE	PDO Mapping	Value Range	Default Value
60D8h	0	Touch probe 2 negative edge counter	U16	RO	No	Tx PDO		

This object indicates frequency for acknowledgement of Touch Probe 2 falling edge.

6.5.39 Object 60E3h: Supported homing methods

Index	Sub index	Name	Type	Access	Constant Value
60E3h	0	Number of entries	U8	RO	20
	1	1st supported homing method	I16	RO	1
	2	2nd supported homing method	I16	RO	2
	3	3rd supported homing method	I16	RO	7
	4	4th supported homing method	I16	RO	11
	5	5th supported homing method	I16	RO	17
	6	6th supported homing method	I16	RO	18
	7	7th supported homing method	I16	RO	24
	8	8th supported homing method	I16	RO	28
	9	9th supported homing method	I16	RO	33
	10	10th supported homing method	I16	RO	34
	11	11th supported homing method	I16	RO	35
	12	12th supported homing method	I16	RO	36
	13	13th supported homing method	I16	RO	37
	14	14th supported homing method	I16	RO	-3
	15	15th supported homing method	I16	RO	-4
	16	16th supported homing method	I16	RO	-5
	17	17th supported homing method	I16	RO	-6
	18	18th supported homing method	I16	RO	0
	19	19th supported homing method	I16	RO	0
	20	20th supported homing method	I16	RO	0

This object indicates lists of origin search methods supported by controller.

Information

Value of each index for Supported homing methods can be differentially indicates by product model or version.

6.5.40 Object 60F4h: Following error actual value

Index	Sub index	Name	Type	Access	SAVE	PDO Mapping	Value Range	Default Value
60F4h	0	Following error actual value	I32	RO	No	Tx PDO		

This Object indicates value of position deviation.

Value of position deviation = Position Demand Value (6062h) - Position Actual Value (6064h)

If the value of position deviation goes far from Following Error Window (6065h) during certain timing, Following Error will be generated.

6.5.41 Object 60FDh: Digital inputs

Index	Sub index	Name	Type	Access	SAVE	PDO Mapping	Value Range	Default Value
60FDh	0	Digital inputs	U32	RO	No	Tx PDO		

This Object indicates status of input signals.

Bit	Name
0	Negative Limit Switch
1	Positive Limit Switch
2	Origin Switch
3 ～15	Reserved User
16	Input 1
17	User Input 2
18	User Input 3
19	User Input 4
20	User Input 5
21	User Input 6
22	User Input 7

Table 6.27: Definition of Digital Input

Value	Definition
0	Input goes OFF.
1	Input goes ON.

Table 6.28: Definitino of Input Value

6.5.42 Object 60FEh: Digital outputs

Index	Sub index	Name	Type	Access	SAVE	PDO Mapping	Value Range	Default Value
60FEh	0	Number of entries	U8	RO	No	No		2
	1	Physical outputs	U32	RW	No	Rx PDO		0000 0000h
	2	Bit mask	U32	RW	No	No		003F 0000h

Able to control User output throughthis Object and Brake.

Bit	Name
0	Set Brake
1 ～15	Reserved
16	User Output 1
17	User Output 2
18	User Output 3
19	User Output 4
20	User Output 5
21	User Output 6
22 ～31	Reserved

Table 6.29: Definition of Physical outputs and Bit mask

Set Brake

Bit 0: Set Brake controls Brake output signal. Able to manually control Brake as set the value of Bit mask as 1.

Value	Bit mask	Physical outputs
0		Brake Release (ON)
1	Brake Manual Control	Brake Engage (OFF)

Table 6.30: Set Brake

Information

Under Operation enabled status, Brake always released (ON). Even set Bit mask as 1 and Physical output as 1, set values are ignored and Brake released.

User Outputs

Bit 16 ~ 21: Controls User outputs output signal. The value of Output is 'Bit mask' AND 'Physical output'.

Value	Bit mask	Physical outputs
0	Non-use output	Output OFF
1	Use output	Output ON

Table 6.31: User Outputs

6.5.43 Object 6502h: Supported drive modes

Index	Sub index	Name	Type	Access	SAVE	PDO Mapping	Value Range	Default Value
6502h	0	Supported drive modes	U32	RO	No	No		

This Object indicates Operation modes currently supported.

Bit	Description
0	Profile Position Mode
1	Velocity Mode
2	Profile Velocity Mode
3	Torque Profile Mode
4	Reserved
5	Homing Mode
6	Interpolated Position Mode
7	Cyclic Sync Position Mode
8	Cyclic Sync Velocity Mode
9	Cyclic Sync Torque Mode
10 ~31	Reserved

Table 6.32: Supported Drive Modes Current

controller supports Profile Position Mode and Homing Mode.

6.6 Manufacture specific Object

6.6.1 Object 2001h: Sensors logics

Index	Sub index	Name	Type	Access	SAVE	PDO Mapping	Value Range	Default Value
2001h	0	Sensors logics	U8	RW	Yes	No		04h

This Object sets Logic of specific input signals.

Bit	Name
0	Origin sensor active logic
1	Limit sensor active logic
2	Z-Phase sensor active logic

Table 6.33: Sensor Logics

Value	Definition
0	Low active
1	High active

Table 6.34: Definition of Logic Value

6.6.2 Object 2002h: Reverse limit direction

Index	Sub index	Name	Type	Access	SAVE	PDO Mapping	Value Range	Default Value
2002h	0	Reverse limit direction	U8	RW	Yes	No	0 ～1	0

This Object can set direction of Hardware Limit Sensor.
It sets 1, IN/OUT connection of LIMIT+ and LIMIT- inputs will be exchanged.

Information

Please use for exchanging of LIMIT+ and LIMIT- input from IN/OUT connection when it is unable to change current wiring due to incorrect wiring of Limit+ and Limit- input signal,

6.6.3 Object 2003h: Limit stop method

Index	Sub index	Name	Type	Access	SAVE	PDO Mapping	Value Range	Default Value
2003h	0	Limit stop method	U8	RW	Yes	No	0 ～2	00h

This Object sets the method of stop once Hardware Limit Sensor goes ON.

Bit	Name
0	Hardware Limit Stop Method
1	Software Limit Stop Method

Table 6.35: Limit Stop Method

Value	Definition
0	Quick Stop
1	Decelerated Stop Ignore
2	(Does not stop)

Table 6.36: Stop Method

Declaration ratio during decelerated stop follows Deceleration of correspondent operation mode.

Information

Under Cyclic Synchronous Position Mode, Hardware and Software Limit are all ignored.

6.6.4 Object 2005h: Encoder resolution

Index	Sub index	Name	Type	Access	SAVE	PDO Mapping	Value Range	Default Value
2005h	0	Encoder resolution	U32	RO	No	No		

This Object indicates Resolution of Encoder currently installed.

Information

Number of pulse to rotate 1 motor revolution follows the value of Reference resolution (200Ch).

6.6.5 Object 2006h: Start speed

Index	Sub index	Name	Type	Access	SAVE	PDO Mapping	Value Range	Default Value
2006h	0	Start speed	U16	RW	Yes	No	1 ～50000	1

This Object sets initial velocity of motor[pps].

6.6.6 Object 2007h: Run current

Index	Sub index	Name	Type	Access	SAVE	PDO Mapping	Value Range	Default Value
2007h	0	Run current	U8	RW	Yes	No	5 ～15	10

This Object sets Run Current of Motor. Unit is % and proportional to the value of rated current of motor.

Run Current = Value × 10 [%]

6.6.7 Object 2008h: Boost current

Index	Sub index	Name	Type	Access	SAVE	PDO Mapping	Value Range	Default Value
2008h	0	Boost current	U8	RW	Yes	No	0 ～7	0

This Object sets Boost Current of Motor. Boost Current can be added up to basic Run Current during acceleration operation.

Boost Current = Value × 50 [%]

6.6.8 Object 2009h: Stop current

Index	Sub index	Name	Type	Access	SAVE	PDO Mapping	Value Range	Default Value
2009h	0	Stop current	U8	RW	Yes	No	2 ～10	5

This Object sets Stop Current of Motor. Unit is % and proportional to the value of Run Current.

Stop Current = Value × 10 [%]

6.6.9 Object 200Ah: Motor number

Index	Sub index	Name	Type	Access	SAVE	PDO Mapping	Value Range	Default Value
200Ah	0	Motor number	U16	RO	No	No		

This Object indicates number of motor currently set.

6.6.10 Object 200Ch: Reference resolution

Index	Sub index	Name	Type	Access	SAVE	PDO Mapping	Value Range	Default Value
200Ch	0	Reference resolution	U32	RW	Yes	No	500 ～20000	10000

This Object sets required number of Pulse to rotate 1 revolution of motor.

Information

Recommend to set same or lower value of Encoder resolution (2005h). In case of setting higher value than Encoder resolution, certain value of Following error can be generated.

6.6.11 Object 200Dh: Position control gain

Index	Sub index	Name	Type	Access	SAVE	PDO Mapping	Value Range	Default Value
200Dh	0	Position control gain	U8	RW	Yes	No	0 ～63	3

This Object sets Position Control Gain.

6.6.12 Object 200Eh: In-position mode

Index	Sub index	Name	Type	Access	SAVE	PDO Mapping	Value Range	Default Value
200Eh	0	In-position mode	U8	RW	Yes	No	0 ～1	0

This Object sets operation mode of In-position.

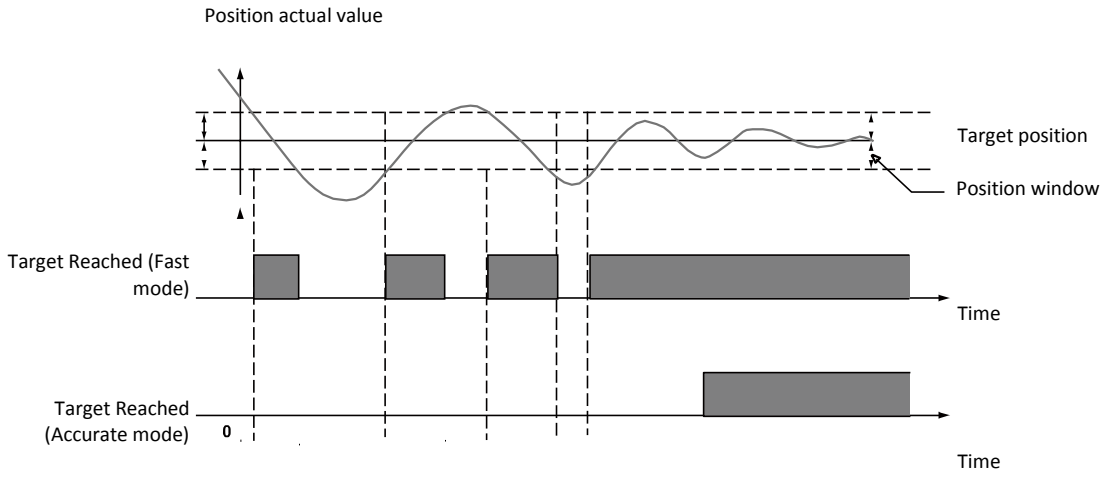

Figure 6.2: Target reached status changes according to In-position Mode

6.6.13 Object 2010h: Brake delay

Index	Sub index	Name	Type	Access	SAVE	PDO Mapping	Value Range	Default Value
2010h	0	Brake delay	U16	RW	Yes	No	0 ～1000	200

This Object sets timing up to Brake release after Enable commands.

6.6.14 Object 2011h: Digital input levels

Index	Sub index	Name	Type	Access	SAVE	PDO Mapping	Value Range	Default Value
2011h	0	Digital input levels	U16	RW	Yes	No		0000h

This Object sets Level of Digital inputs of User input.

Bit	Description
0	Set Level of User Input 1.
1	Set Level of User Input 2.
2	Set Level of User Input 3.
3	Set Level of User Input 4.
4	Set Level of User Input 5.
5	Set Level of User Input 6.
6	Set Level of User Input 7.
7 ～15	reserved

6.6.15 Object 2012h: Digital output levels

Index	Sub index	Name	Type	Access	SAVE	PDO Mapping	Value Range	Default Value
2012h	0	Digital output levels	U16	RW	Yes	No		0000h

This Object sets Level of Digital outputs of User output.

Bit	Description
0	Set Level of User Output 1.
1	Set Level of User Output 2.
2	Set Level of User Output 3.
3	Set Level of User Output 4.
4	Set Level of User Output 5.
5	Set Level of User Output 6.
6 ～15	reserved