NO.VHC SERIES

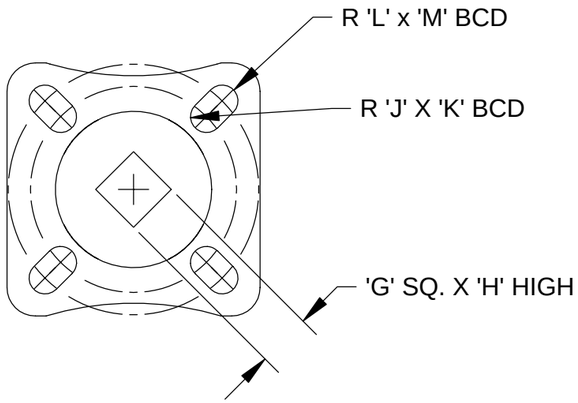

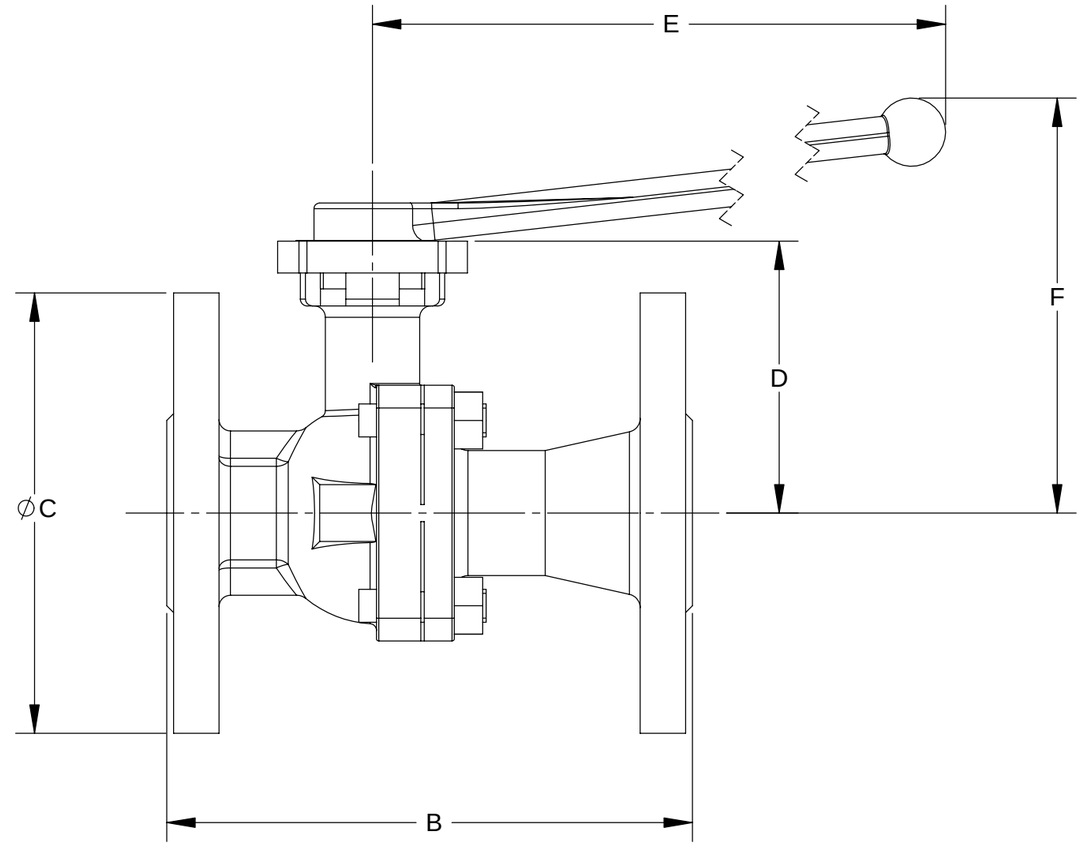

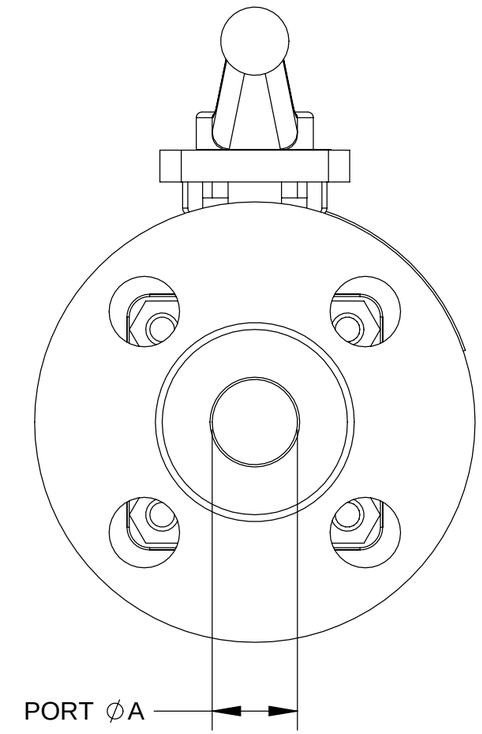

VALVE DATA	
BODY & CAP	CARBON STEEL
BALL	316 SS
STEM	316 SS
SEATS	RTFE
SEALS	PTFE - VITON

MODEL NO.	DIMENSIONS								MOUNTING HOLES			
	A	B	C	D	E	F	G	H	J	K	L	M
VHC6.EJ 1 1/2	1.50	6.50	5.00	2.99	9.75	4.06	.55	.52	.14	1.97	.14	2.76
VHC6.EJ 2	1.97	7.00	6.00	3.33	9.75	4.40	.55	.52	.14	1.97	.14	2.76
VHC6.EJ 2 1/2	2.52	7.50	7.00	4.11	13.8	6.00	.67	.73	.21	2.76	.23	4.02
VHC6.EJ 3	2.99	8.00	7.50	4.39	13.8	6.40	.67	.73	.21	2.76	.23	4.02
VHC6.EJ 4	3.94	9.00	9.00	5.33	13.8	7.50	.87	.88	.23	4.02	.27	4.92

UNCONTROLLED DRAWING

THIS PRINT IS THE PROPERTY OF DYNAQUIP CONTROLS AND SHALL NOT BE COPIED, REPRODUCED, LOANED, OR DISPOSED OF DIRECTLY OR INDIRECTLY, NOR USED FOR ANY PURPOSE OTHER THAN THAT FOR WHICH IT IS SPECIFICALLY FURNISHED EXCEPT BY WRITTEN PERMISSION OF DYNAQUIP CONTROLS.

NO. VHC SERIES

FILE NO. SUB203

DO NOT SCALE

TITLE

BALL VALVE- STEEL FULL PORT 150 ANSI FLANGE

DR	DATE	CH'KD	DATE	ENGR	DATE
CMO	02-27-07	CMO	03-08-07	CMO	03-08-07

DynaQuip Controls

www.comoso.com