MV 21 FLOW CONTROL

1	2	3	4	5	6
Corpo Body Corps Körper	Regolatore Valve Réducteur de débit Drosselventil	Spillo Needle Epingle Nadel	Pomolo Handwheel Volant moleté Rändelkopf	Dado Nut Ecrou Überwurfmutter	Guarnizioni Seals Joint d'étancheité Dichtung
Alluminio anodizzato Anodized aluminium Alluminium anodisé Eloxiertes Aluminium	Ottone UNI EN 12164 CW614N Nichelato Brass UNI EN 12164 CW614N Nickel plated Laiton UNI EN 12164 CW614N Nickelé Messing UNI EN 12164 CW614N vernickelt				NBR NBR NBR NBR

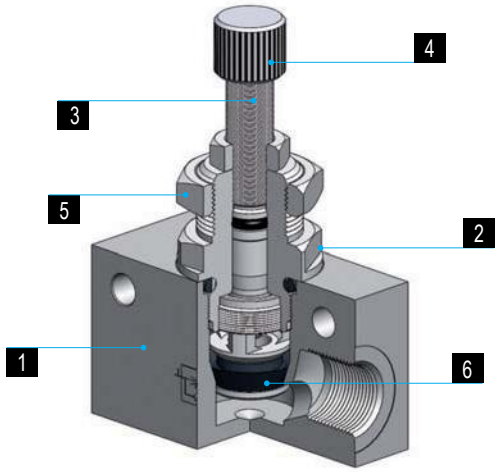

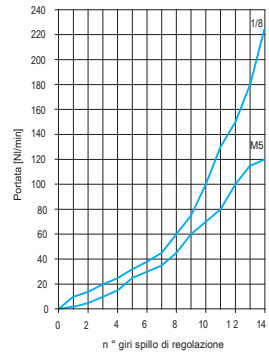

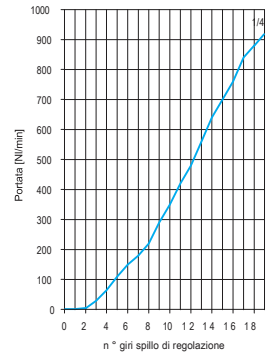

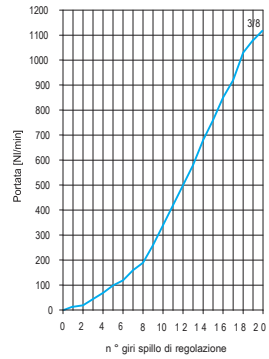

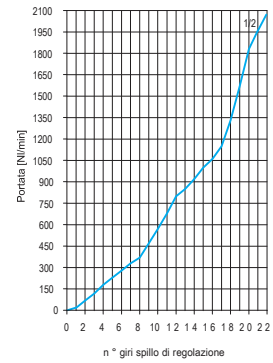

DATA SHEET

Recommended tubings:
according to the fitting connected to the flow control.
Working temperature:
-20°C ÷ 70°C
Working pressure:
0 ÷10 bar
Application field:
pneumatic installations fed with filtered, lubricated air.

MV 21

Line flow control

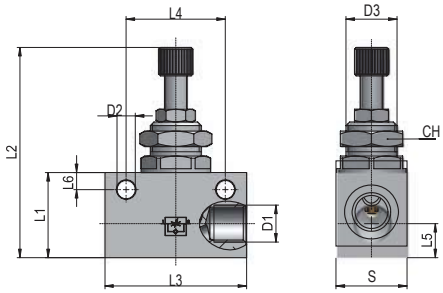

Type	D_1	D_2	D_3	L_1	L_2 max	L_3	L_4	L_5	S	CH	g
21 00 M5	M5x0,8	3,2	M9x0,75	15	37	25	18	7	12	11	19
21 00 18	G1/8	4,5	M12x0,75	21	56	34	24	8	16	15	50
21 00 14	G1/4	6,5	M18x1,5	30	75	50	35	12	25	22	162
21 00 38	G3/8	6,5	M18x1,5	30	75	58	40	12	25	22	169
21 00 12	G1/2	6,5	M22x1,5	40	92	65	50	17	30	26	299

Available version: …/U …/B

800.696.6165 www.comoso.com